Nov. 28, 1939. R. W. AKINS 2,181,163

ADJUSTABLE SUPPORT FOR BUILDINGS OR THE LIKE

Filed Aug. 11, 1939

Fig.-1

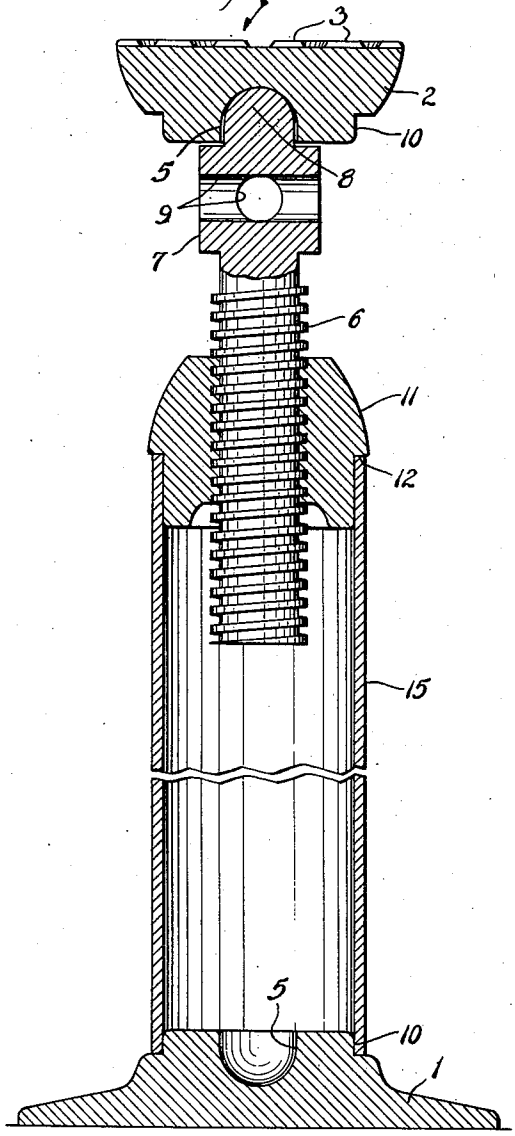

Fig.-2

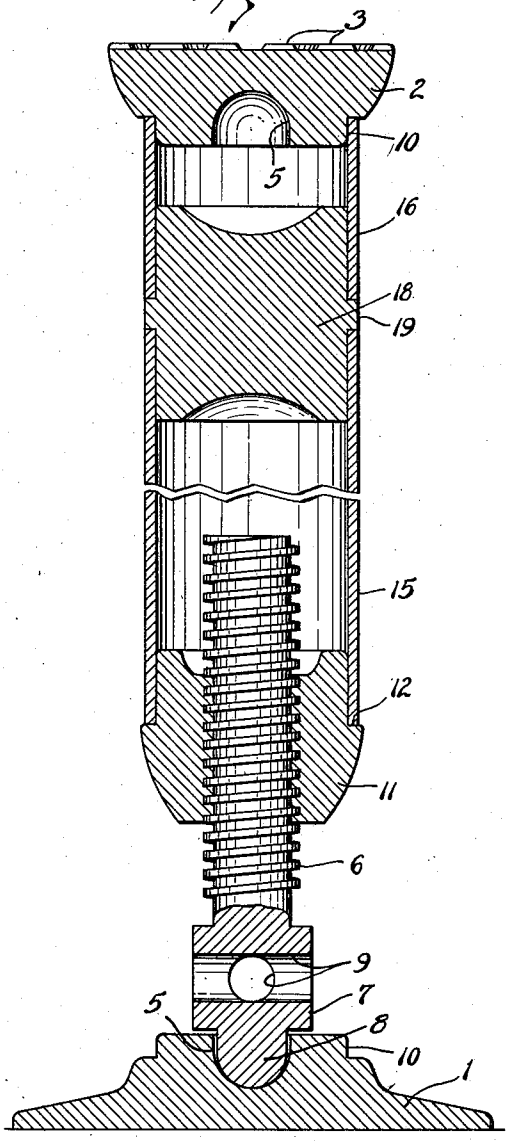

INVENTOR
ROY W. AKINS

BY

ATTORNEYS

Patented Nov. 28, 1939

2,181,163

UNITED STATES PATENT OFFICE

2,181,163

ADJUSTABLE SUPPORT FOR BUILDINGS OR THE LIKE

Roy W. Akins, Akron, Ohio

Application August 11, 1939, Serial No. 289,609

2 Claims. (Cl. 254—101)

This invention relates primarily to adjustable posts or supports such as may be used for permanently shoring up floors in buildings. Its advantages and objects are to provide a device of this type which will be sturdy and will accommodate itself to angular variations between the planes of two floor levels. It is also an object to provide a device of this nature which is very flexible, as it may be built up of several separable units to any desired height and can be reversed in position to accommodate situations where the lifting force may be applied either at the top or bottom of the unit.

It also has the advantage of simplicity, ease of assembly and inexpensiveness. These and other objects and advantages will be found in the device, it being understood that exact conformity with the details shown and described is not essential for the accomplishment of the purposes of the invention.

In the drawing in which the preferred form of the invention is shown:

Figure 1 is a vertical sectional view through the device showing it with the lifting element at the top of the support;

Figure 2 is a similar view showing the lifting element at the base of the support and the means by which the effective length of the device may be extended by the addition of units in the central portion.

The device comprises a base member 1 and a cap member 2, the former having a greater area to support the load. The surface of the cap member is provided with a series of projections 3 so that it will afford a better grip on the floor to be supported. In the upper side of the base member and the lower face of the cap member are provided the substantially hemispherical sockets 5, which, in conjunction with the lifting member, accommodate the device to angular variations between the floor and the ceiling.

The lifting element consists of a heavy screw 6 the end of which is provided with a head 7 having a rounded knob or projection 8 seating in the socket 5 in either the base or cap. The knob is somewhat longer than the depth of the socket and is provided with side clearance so that the axis of the screw may vary considerably from the perpendicular line of either the base or the cap and still provide a secure support which will not buckle or collapse when out of vertical alignment under the extremely heavy loads to which the device is subjected. The head 7 has openings 9 which receive a bar or lever to turn the screw. The cap and base are provided with projections 10 which provide seats for the main casing as will be described.

On the screw 6 is located the nut 11 which is a heavy casting having an outer central rib to form a seat 12 corresponding to the seats 10.

The central portion or main body is formed by a heavy pipe 15 which seats over the central projections on the base and cap and rests upon the shoulders 10 and 12. This pipe 15 may be made in standard lengths and may be supplemented by additional lengths such as shown at 16 in Fig. 2 and a splicing piece or connector 18 provided with a narrow rib 19 which forms seats for the sections 15 and 16. By providing a standard length which will accommodate itself to the minimum height of ceilings, and short sections of varying lengths with appropriate number of splicing units, it is easy to make the support of any length which may be required. By building the central portion to the approximate height before starting the screw, the operator will reduce the length of screw which must be exposed in any installation.

It will be observed by a comparison of Figs. 1 and 2 that as the parts are all separable the lifting member may be located either at the top or bottom of the unit so that while ordinarily it will be at the bottom, as in Fig. 2, when, for example, the base must be set in a depression in the floor or in water, or conditions are such that the operator cannot have convenient access to the head 7 at the base of the unit, it may be reversed as shown in Fig. 1, and the force applied at the top of the unit.

While the invention may have other uses, it is primarily intended as a permanent fixture used to lift and support sagging floors or ceilings. A powerful lifting force may be applied through the device and due to its flexibility it will act as a firm support in the case of sloping floors such as often found in basements of buildings. The fact that the parts are separable and interchangeable throughout makes it easy to reverse the device and to build it up to the required lengths for all types and conditions of use. The curved seats 5 may be transferred to the screw head by forming rounded knobs on the base and cap, but I prefer the arrangement shown here as it is stronger and more effective.

What is claimed is:

1. A support for the purposes set forth comprising a plurality of separable members including a base member and a cap member each having a curved seat, a screw having a complemen-

tary head adapted to rest on either seat and having sufficient clearance to permit angular variation of the screw axis with respect to the cap or base, a nut on the screw, external seats on the nut and on the cap and base, and a tubular central portion to fit the seat on the nut and the seats on the cap or base selectively.

2. A support for the purposes set forth comprising a plurality of separable members including a base member and a cap member each having a curved seat, a screw having a complementary head adapted to rest on either seat and having sufficient clearance to permit angular variation of the screw axis with respect to the cap or base, a nut on the screw, external seats on the nut and on the cap and base, and a tubular central portion to fit the seat on the nut and the seats on the cap or base selectively, the tubular central portion being composed of a plurality of separable units and intermediate splicing members whereby the effective length of the device may be varied.

ROY W. AKINS.