(12) INTERNATIONAL APPLICATION PUBLISHED UNDER THE PATENT COOPERATION TREATY (PCT)

(19) World Intellectual Property Organization
International Bureau

(43) International Publication Date
3 June 2004 (03.06.2004)

PCT

(10) International Publication Number
WO 2004/046496 A1

(51) International Patent Classification[7]: E21B 10/64, 7/20

(21) International Application Number:
PCT/FI2003/000876

(22) International Filing Date:
18 November 2003 (18.11.2003)

(25) Filing Language: English

(26) Publication Language: English

(30) Priority Data:
20022043 18 November 2002 (18.11.2002) FI

(71) Applicants and
(72) Inventors: **HULKKONEN, Teijo** [FI/FI]; Koivupirtinkatu 14, FIN-33580 Tampere (FI). **PAASONEN, Hannu** [FI/FI]; Kyyninkatu 8 A 15, FIN-37100 Nokia (FI).

(74) Agent: **NIEMINEN, Taisto**; T Nieminen Oy, Kehräsaari B, FIN-33200 Tampere (FI).

(81) Designated States *(national)*: AE, AG, AL, AM, AT, AU, AZ, BA, BB, BG, BR, BW, BY, BZ, CA, CH, CN, CO, CR, CU, CZ, DE, DK, DM, DZ, EC, EE, EG, ES, FI, GB, GD, GE, GH, GM, HR, HU, ID, IL, IN, IS, JP, KE, KG, KP, KR, KZ, LC, LK, LR, LS, LT, LU, LV, MA, MD, MG, MK, MN, MW, MX, MZ, NI, NO, NZ, OM, PG, PH, PL, PT, RO, RU, SC, SD, SE, SG, SK, SL, SY, TJ, TM, TN, TR, TT, TZ, UA, UG, US, UZ, VC, VN, YU, ZA, ZM, ZW.

(84) Designated States *(regional)*: ARIPO patent (BW, GH, GM, KE, LS, MW, MZ, SD, SL, SZ, TZ, UG, ZM, ZW), Eurasian patent (AM, AZ, BY, KG, KZ, MD, RU, TJ, TM), European patent (AT, BE, BG, CH, CY, CZ, DE, DK, EE, ES, FI, FR, GB, GR, HU, IE, IT, LU, MC, NL, PT, RO, SE, SI, SK, TR), OAPI patent (BF, BJ, CF, CG, CI, CM, GA, GN, GQ, GW, ML, MR, NE, SN, TD, TG).

Published:
— *with international search report*

[Continued on next page]

(54) Title: BIT ASSEMBLY FOR A HAMMERING DRILL

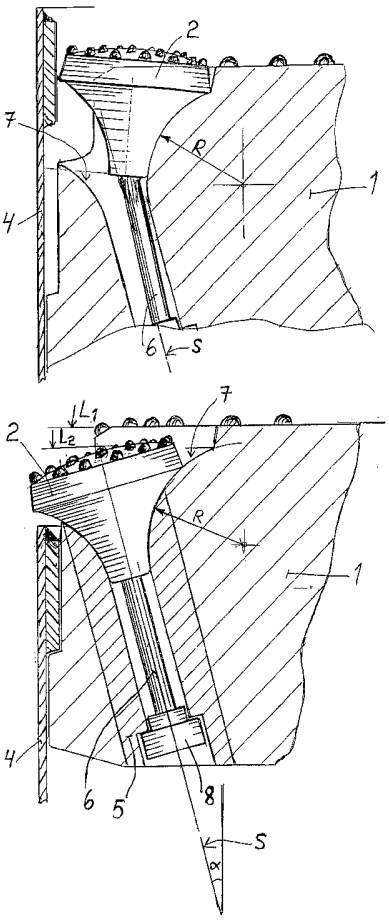

(57) Abstract: A bit assembly for a hammering and rotating drill, in which assembly the drill body (1) is arranged to drill essentially the middle portion of the hole and in the drill body (1) mounted one or more hammering bit (2), (3) is arranged to drill the outer circle of the hole. The outer circle of the hole drilling bits (2), (3) are arranged to drill a drilling surface, which locates further behind in the drilling direction than for the drill body (1) meant drilling surface (L1) and that the mentioned bits (2), (3) are further mounted in a drill body (1) formed counter cavities (7), the axial directions (S) of which have either the same direction as the drilling direction has or deviate outwards from it and mentioned bits can at least a part of their way out of the counter cavities be transported out in the direction which deviates from the axial direction (S) of the counter cavity.

WO 2004/046496 A1

For two-letter codes and other abbreviations, refer to the "Guidance Notes on Codes and Abbreviations" appearing at the beginning of each regular issue of the PCT Gazette.

BIT ASSEMBLY FOR A HAMMERING DRILL

The invention relates to a bit assembly for a hammering and rotating drill, in which assembly the drill body is arranged to drill essentially the middle portion of the hole and in the drill body mounted one or more hammering bit is arranged to drill the outer circle of the hole and the mentioned outer circle of the hole drilling bits are arranged to drill a drilling surface, which locates further behind in the drilling direction than for the drill body meant drilling surface and that the mentioned bits are further mounted in a drill body formed counter cavities, the axial directions of which have either the same direction as the drilling direction has or deviate outwards from it.

Earlier is known from patent publication FI-95618 a drilling apparatus in which the outer circle of the hole drilling ring bit drills the outer circle so that a casing tube can be pulled into the hole in connection with the drilling. When the drilling apparatus is pulled out from the hole so that the casing tube remains in the hole, the ring bit also has to remain in the hole bottom.

Also from patent publication FI-85302 is known a drilling apparatus for drilling large holes in which apparatus in the centre locating bit drills the hole centre portion and separate on the outer circle of the drilling apparatus placed bits drill the outer circle of the hole. The outer circle drilling bits need in this case rotating and hammering devices of their own. The drilling apparatus can be applied for drilling of horizontal holes when it is meant finally to penetrate through the ground into free space.

It is abundantly known with a casing tube drilling eccentric drills where drilling is carried out by a rotating bit which is mounted eccentric in relation to centre axis of the casing tube, and by means of which it is possible to drill a larger hole than the diameter of the casing tube. When drilling is stopped the eccentricity of the bit in relation to the centre axis of the casing tube is changed so that the bit can be pulled out from the hole and the casing tube is left in the hole.

The disadvantage for these known solutions is that in these drilling apparatuses in which the ring bit is left in the hole, there is in every hole always loosen relative expensive bit.

When used an eccentric bit the bit will be lifted up from the hole, but the bit will wear very quickly because the drilling surface in the bit is remarkable smaller than the drilling surface of the hole, that's why the worn bits have to be often changed. In certain drilling apparatuses where the drilling bits can be pulled against each other thus allowing the bit assembly to be lifted up in spite of the casing tube, the mechanism by means of which the bits are pulled against each other has to be complicated, it is difficult to change the bits and they can be very easily damaged.

By means of the bit assembly according to the invention in the business area existing problem can be unexpectedly solved, and characteristics for the bit assembly according to the invention is that in the counter cavities mounted bits can at least a part of their way out of the counter cavities be transported out in the direction which deviates from the axial direction of the counter cavity in order to make the outer diameter of the drilling unit smaller.

The advantage for the bit assembly according to the invention is that the large hole drilling, diameter 300 – 1000 mm, is possible by means of the hammering devices, when thanks to many separate in the drilling body mounted and only the outer circle of the hole drilling bits the total drilling surface area becomes smaller than the front surface area of the drilled hole. The bit assembly doesn't need so effective and inconvenient heavy hammer device, than with corresponding drills whose bit is hammering against whole drilling surface.

The separate outer circle drilling bits can also easily be changed. Further the outer circle drilling bits can be according to the invention mounted in the drill body in such a way that when the bit assembly is pulled out from the hole, the bits are moving inwards at the casing tube edge and are thus allowing the pulling of the whole bit assembly out and that the casing tube remains in the hole. In the solution no expensive is remaining in the hole and drilling becomes advantageous.

In the following the invention is more closely described by referring to the enclosed drawings, where

Fig. 1 shows section view of the outer circle of hole drilling bit mounted in a drill body.

Fig. 2 shows an alternative bit mounting.

Fig. 3 shows a bit moving inwards at the casing tube.

Fig. 4 shows a bit assembly of the fig. 1 seen from the front.

Fig. 5 shows an alternative bit assembly seen from the front.

Fig. 5a shows a section view of the bit mounting in a drill body.

Fig. 1 shows a drill body 1 for a hammering drill which drills by means of its drilling surface, level L1, essentially the centre portion of the hole. Many smaller bits 2 have been mounted in the drill body 1 for drilling the outer circle of the hole. The fitting surface is curved counter surface 7 whose curvature can also be radius R. The bit 2 drills a hole whose diameter is little larger than the casing tube 4 needs in order to be able to follow with in a hole. The bit 2 is rotation piece in relation to its axis, that's why it can be rotate in its counter cavity 7. The rotation is hoped and the rotation is secured by it that the drilling surface level L2 of the bit 2 is located further behind in the drilling direction than the drilling surface level L1 of the drill body 1 and that the bit 2 doesn't drill by other portion than by the bit portion which in turn locates in the outer edge of the circle. There is in figure 4 presented an area 9, by which bit portion the bit 2 mainly drills. The rotation of the whole drilling unit causes that such a moment is directed to the bit 2 which moment rotates the bit round its own axis.

The bit 2 can be mounted in the drill body 1 by using as a help a separate bushing 5 which is placed into a hole drilled in the drill body 1. It is easier to machine in this kind of bushing 5 the needed counter cavities 7 as for example in the drill body 1. In fig. 2 there is presented an alternative counter cavity assembly, which is formed to be step-like. Also the bit 2 has then step-like design. The mounting of the bit 2, 2' into the counter cavity and the axial direction S which describes this in figures forms with the drilling direction preferably an angle α. The direction S of the counter cavity deviates so advantageously outwards from the drilling direction. The angle α is advantageously between 0 - 30°. The axial direction of the counter cavity can possible be same as the drilling direction, as it is in the figure 5a. It facilitates a little the construction of the drill unit if the angle α is larger than 0.

The figure 3 presents, how the bit 2 of the bit assembly according to the invention moves to the side at the casing tube 4, when the whole drill unit is pulled out from the hole. The

material of the arm 6 fixing the bit 2 has been elected so that it allows the bit 2 to move out and to the side a needed distance. The form of the counter surface 7 causes that the bit also glides and turns inwards and doesn't at all move out in the direction S of the axis of the counter cavity. The casing tube 4 carries out the moving of the bit 2. When the whole drilling unit has been received out from the casing tube the bit 2 will move back into its counter cavity. The fixing arm 6 is for example spring-like and therefore stretchy and it is needed that it will bend at least in one point. It can be manufactured of pull resistant materials totally or combined, wherein it can comprise separately a stretchy portion and separately bending portion. Rubbers, plastics, fibre materials, steel springs or similar can become in question. The bending of the fixing arm can also be solved by means of articulated joint. In the drilling situation the fixing arm 6 stresses the bit 2, 3 against the counter cavity. The fixing arm 6 and possible holder part 8 will preferable rotate with when the bit 2 rotates.

In figure 5 the bit 3 has angular form, wherein it doesn't rotate in its counter cavity. The moving of the bit 3 out of the cavity pushed by the casing tube 4 can, however, happen just in the same way as presented in figures 2 and 3 i.e. based on the curved or step-like side form. The bits 3 have always the same portion in the drilling phase, wherein they will wear a little sooner than the bits 2. The changing of the bits 2 and 3 takes, however, quite short time when the drill body 1 has been removed from the hole. The bit assembly according to the invention becomes the cheaper the larger holes are drilled. The centre bit will have long duration and smaller strain than one full-sized centre bit will have when drilled the whole hole only by that one bit. Also the hammer device can be smaller of its power when the summarized bit surface area doesn't correspond the drilling surface of the whole drilling. The drilling of the hole naturally takes little more time carried out by the way according to the invention compared with drilling by means of one bit by using heavy hammer device which is needed.

In figure 5a there is a section view of the unrotatable bit 3 where the bit 3 locates in its counter cavity. The axial direction S of the counter cavity is same as the drilling direction. When the drilling unit is begun to pull out from the hole the front edge of the casing tube 4 pushes the bit 3 so that the bit 3 begins to turn to the centre axis of the drill body 1. The arm 6 stretches and bends wherein the bit 3 is able to pass the casing tube.

CLAIMS

1. A bit assembly for a hammering and rotating drill, in which assembly the drill body (1) is arranged to drill essentially the middle portion of the hole and in the drill body (1) mounted one or more hammering bit (2),(3) is arranged to drill the outer circle of the hole and the mentioned outer circle of the hole drilling bits (2),(3) are arranged to drill a drilling surface, which locates further behind in the drilling direction than for the drill body (1) meant drilling surface (L1) and that the mentioned bits (2),(3) are further mounted in a drill body (1) formed counter cavities (7), the axial directions (S) of which have either the same direction as the drilling direction has or deviate outwards from it, **characterized** in that in the counter cavities (7) mounted bits (2);(3) can at least a part of their way out of the counter cavities be transported out in the direction which deviates from the axial direction (S) of the counter cavity in order to make the outer diameter of the drilling unit smaller.

2. A bit assembly according to claim 1 **characterized** in that into the counter cavity (7) of the bit (2) mountable portion is a rotation piece wherein the bit (2) is meant to rotate in its counter cavity (7) in the drilling situation.

3. A bit assembly according to claim 1 **characterized** in that the bit (3) deviates from a rotation piece and it is meant to be unrotatable in its counter cavity.

4. A bit assembly according to claim 1 or 2 **characterized** in that the bit (2) which drills the outer circle of the hole is arranged to drill only by means of a part (9) of its drill surface wherein the rotation of the whole bit assembly during drilling rotates also the mentioned bit (2) round its own axis.

5. A bit assembly according to claim 1 **characterized** in that the bit (2);(3) can be moved out from its counter cavity (7) so that it moves wholly inside the casing tube (4) which follows the bit assembly wherein it is possible to remove the bit assembly from the hole and to remain the casing tube in the hole.

6. A bit assembly according to claim 1 **characterized** in that the side form of the counter cavity (7) is curved wherein in the cavity mounted bit (2) turns to the centre axis of the drill

body (1) when the bit (2) comes out from the cavity.

7. A bit assembly according to claim 1 **characterized** in that the side form of the counter cavity is step-like.

8. A bit assembly according to claim 1 **characterized** in that the fixing of the bit (2);(3) to the counter cavity is arranged by using a fixing arm (6) which allows the bit (2);(3) move needed distance in wanted direction out from the counter cavity.

9. A bit assembly according to claim 1 **characterized** in that the counter cavity is arranged into the drill body (1) by means of a separate bushing (5) which is fixed in a hole drilled into the drill body (1).

10. A bit assembly according to claim 1 **characterized** in that the bits (2);(3) drilling the outer circle of the hole can be changed by disassembling the fixing arm arrangement (6);(8)

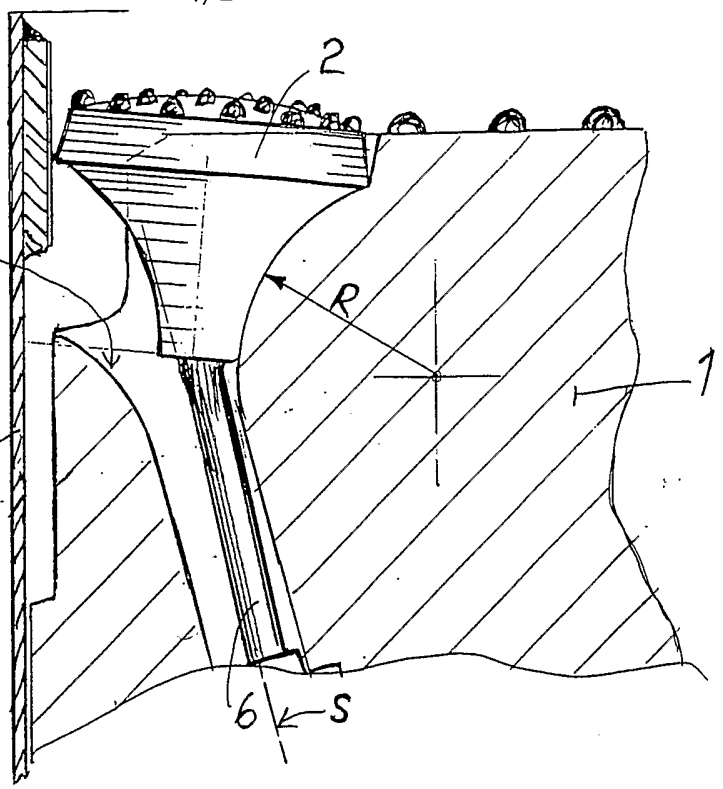

Fig. 3

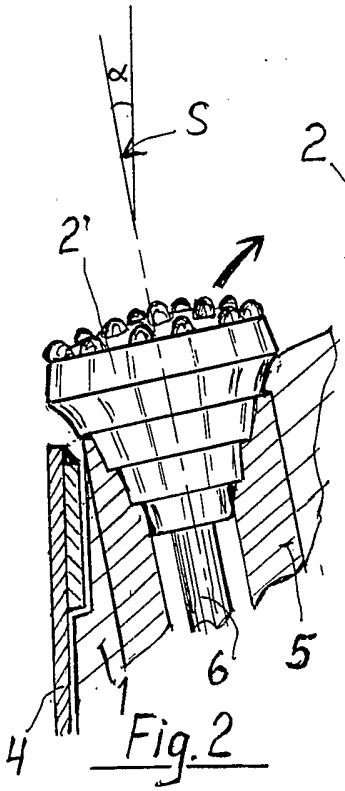

Fig. 2

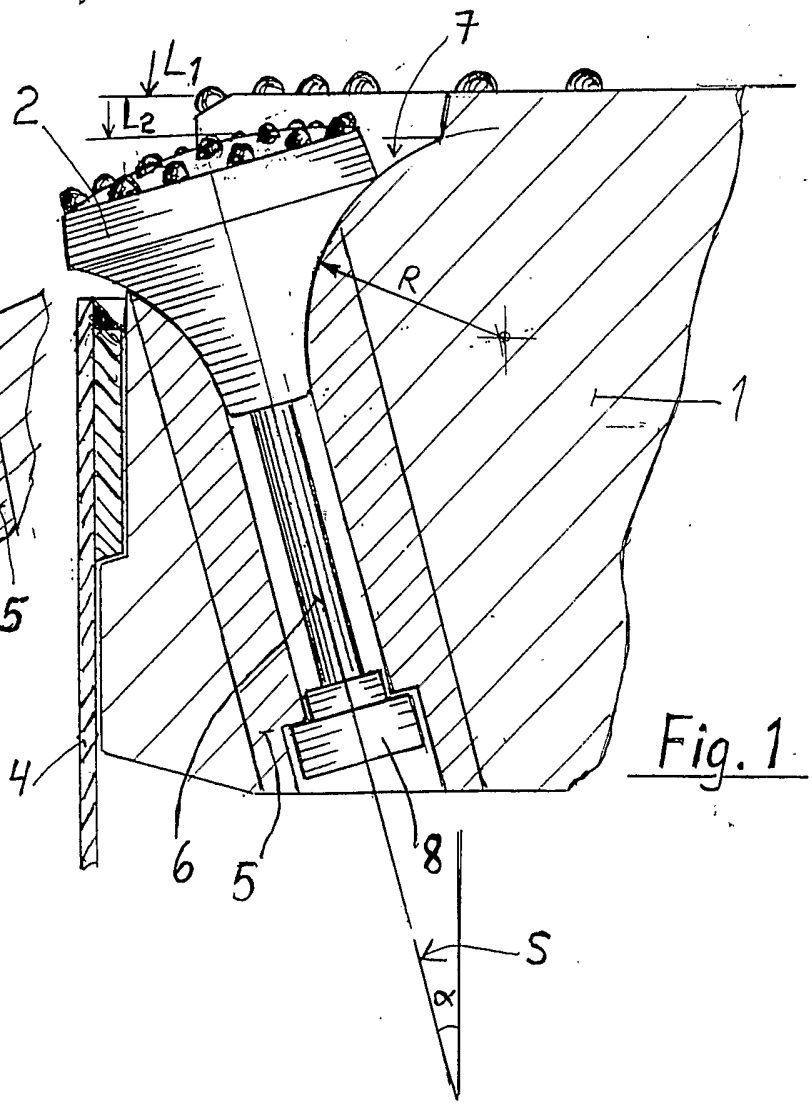

Fig. 1

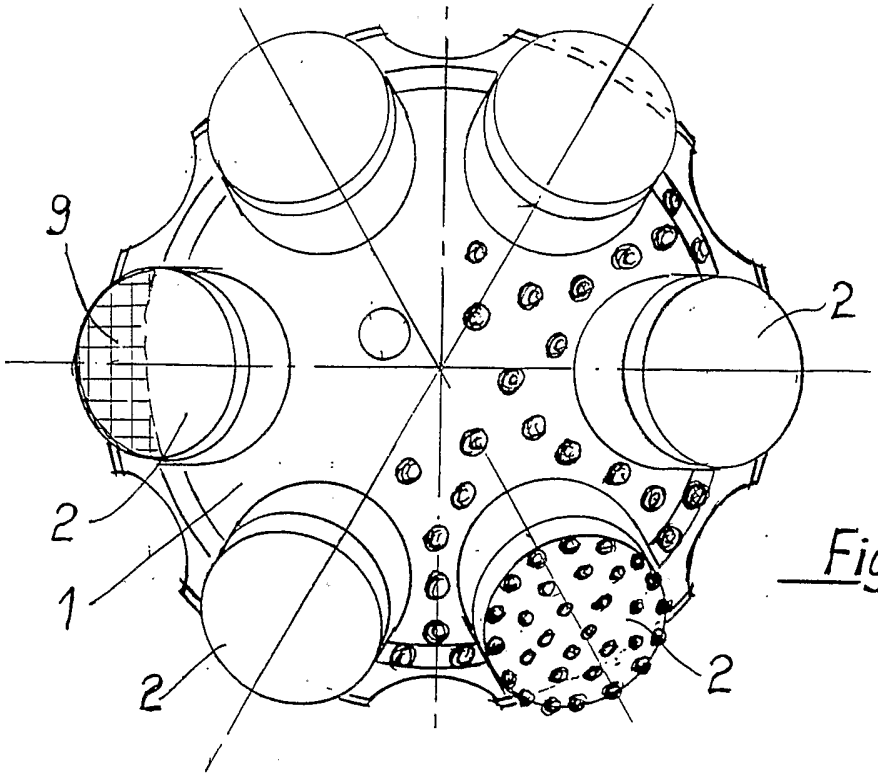

Fig. 4

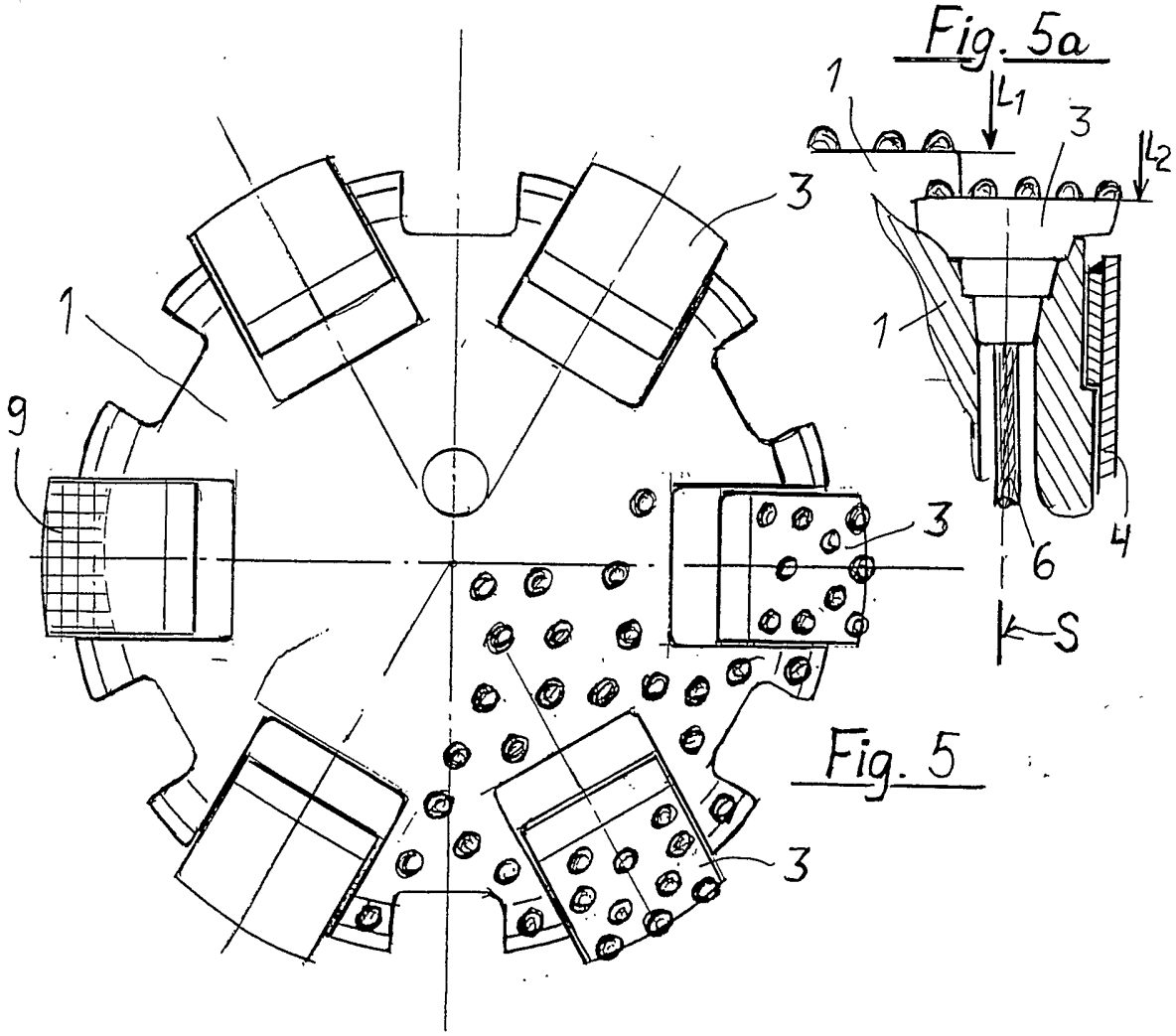

Fig. 5

Fig. 5a

INTERNATIONAL SEARCH REPORT

International application No.
PCT/FI 2003/000876

A. CLASSIFICATION OF SUBJECT MATTER

IPC7: E21B 10/64, E21B 7/20
According to International Patent Classification (IPC) or to both national classification and IPC

B. FIELDS SEARCHED

Minimum documentation searched (classification system followed by classification symbols)

IPC7: E21B, E21D

Documentation searched other than minimum documentation to the extent that such documents are included in the fields searched

SE,DK,FI,NO classes as above

Electronic data base consulted during the international search (name of data base and, where practicable, search terms used)

EPO-INTERNAL, PAJ

C. DOCUMENTS CONSIDERED TO BE RELEVANT

Category*	Citation of document, with indication, where appropriate, of the relevant passages	Relevant to claim No.
A	GB 973790 A (J. LABROSSE), 28 October 1964 (28.10.1964) --	1-10
A	DE 2839868 A1 (BRODER, A.), 5 April 1979 (05.04.1979) --	1-10
A	EP 0195265 A1 (ROBERT BOSCH GMBH), 24 Sept 1986 (24.09.1986) --	1-10
A	EP 0429649 A1 (VSESOJUZNY NAUCHNO-ISSLEDOVATELSKY INSTITUT METODIKI TEKHNIKI RAZVEDKI ET AL), 5 June 1991 (05.06.1991) --	1-10

[X] Further documents are listed in the continuation of Box C. [X] See patent family annex.

* Special categories of cited documents:
"A" document defining the general state of the art which is not considered to be of particular relevance
"E" earlier application or patent but published on or after the international filing date
"L" document which may throw doubts on priority claim(s) or which is cited to establish the publication date of another citation or other special reason (as specified)
"O" document referring to an oral disclosure, use, exhibition or other means
"P" document published prior to the international filing date but later than the priority date claimed
"T" later document published after the international filing date or priority date and not in conflict with the application but cited to understand the principle or theory underlying the invention
"X" document of particular relevance: the claimed invention cannot be considered novel or cannot be considered to involve an inventive step when the document is taken alone
"Y" document of particular relevance: the claimed invention cannot be considered to involve an inventive step when the document is combined with one or more other such documents, such combination being obvious to a person skilled in the art
"&" document member of the same patent family

Date of the actual completion of the international search	Date of mailing of the international search report
11 February 2004	17 -02- 2004
Name and mailing address of the ISA/ Swedish Patent Office Box 5055, S-102 42 STOCKHOLM Facsimile No. +46 8 666 02 86	Authorized officer Christer Bäcknert / MRo Telephone No. +46 8 782 25 00

Form PCT/ISA/210 (second sheet) (January 2004)

INTERNATIONAL SEARCH REPORT

International application No.
PCT/FI 2003/000876

C (Continuation). DOCUMENTS CONSIDERED TO BE RELEVANT

Category*	Citation of document, with indication, where appropriate, of the relevant passages	Relevant to claim No.
A	FR 2043841 A (FIRMA GEBR. BÖHLER & CO. AKTIENGESELLSCHAFT), 19 February 1971 (19.02.1971) -- --------	1-10

GB	973790	A	28/10/1964	NONE		
DE	2839868	A1	05/04/1979	CH	622312 A	31/03/1981
EP	0195265	A1	24/09/1986	AT	39334 T	15/01/1989
				DE	3510375 A	25/09/1986
				DE	3661465 D	00/00/0000
EP	0429649	A1	05/06/1991	FI	910283 D	00/00/0000
				JP	4500105 T	09/01/1992
				WO	9014494 A	29/11/1990
FR	2043841	A	19/02/1971	AT	294728 B	10/12/1971
				BE	751227 A	03/11/1970
				CH	516729 A	15/12/1971
				CS	172329 B	29/12/1976
				DE	2025439 A,B,C	17/12/1970