May 2, 1967 K. S. KELLEHER 3,317,912

PLURAL CONCENTRIC PARABOLIC ANTENNA FOR OMNIDIRECTIONAL COVERAGE

Filed July 29, 1963 3 Sheets-Sheet 1

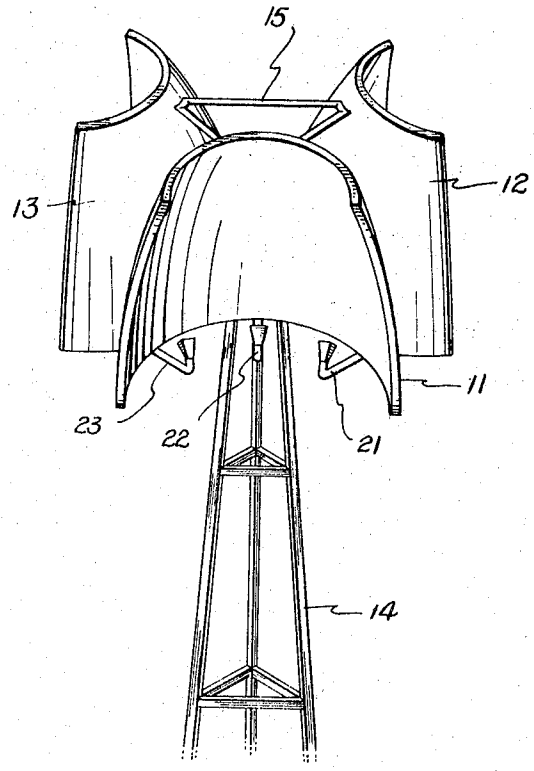

Fig. 1

INVENTOR
Kenneth S. Kelleher

BY Glenn S. Owecke
AGENT

May 2, 1967 K. S. KELLEHER 3,317,912

PLURAL CONCENTRIC PARABOLIC ANTENNA FOR OMNIDIRECTIONAL COVERAGE

Filed July 29, 1963 3 Sheets-Sheet 2

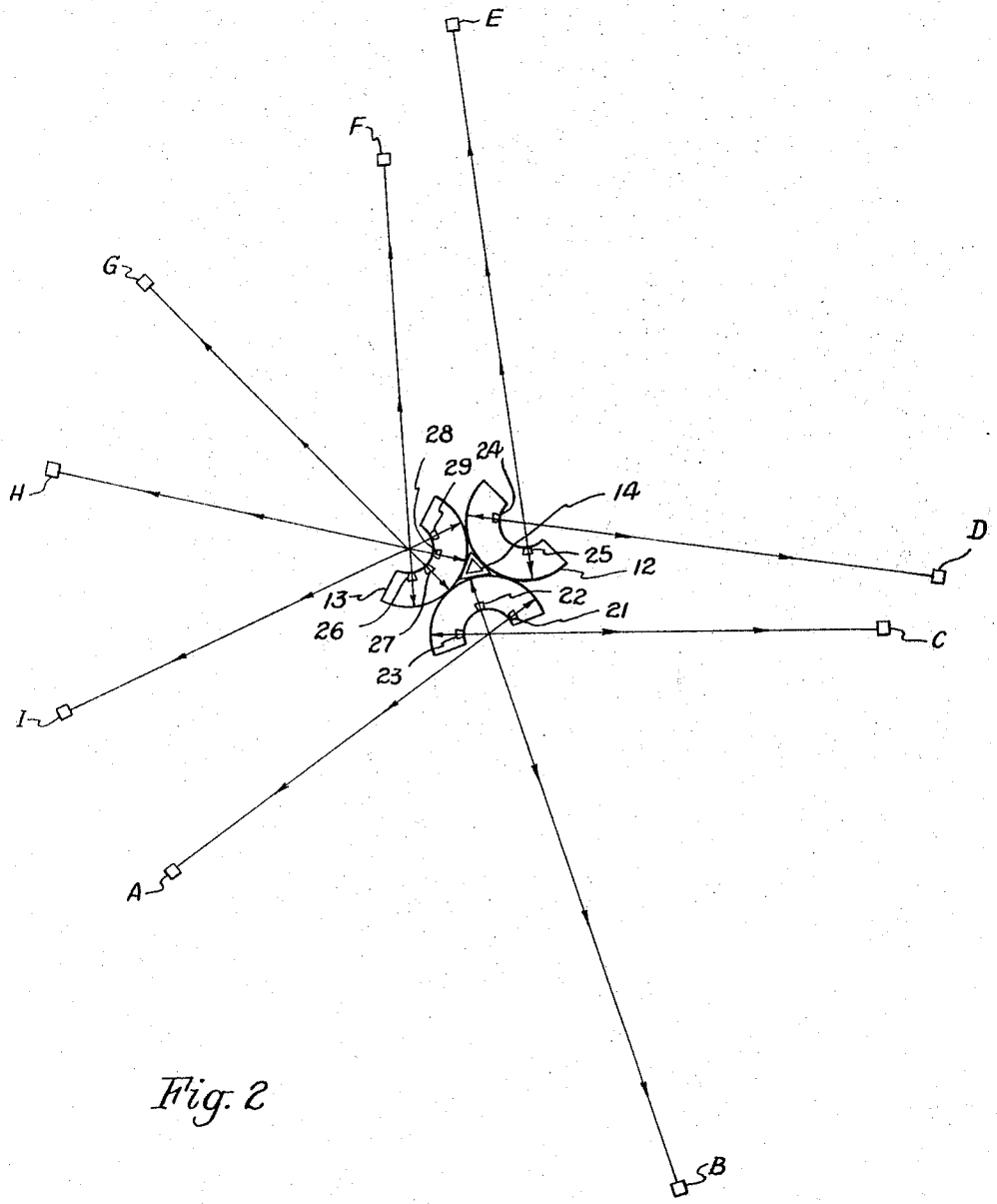

Fig. 2

INVENTOR
Kenneth S. Kelleher

BY Glenn S. Overick
AGENT

May 2, 1967 K. S. KELLEHER 3,317,912

PLURAL CONCENTRIC PARABOLIC ANTENNA FOR OMNIDIRECTIONAL COVERAGE

Filed July 29, 1963 3 Sheets-Sheet 3

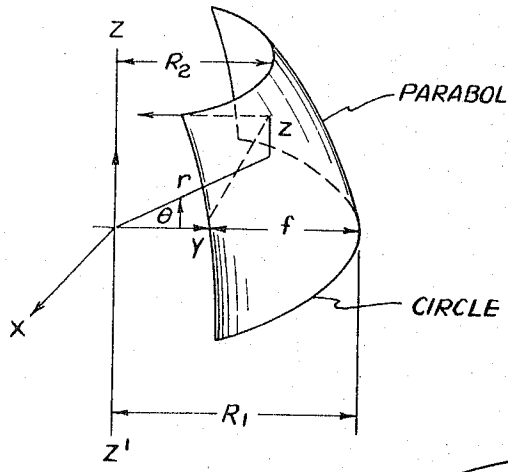

Fig. 3

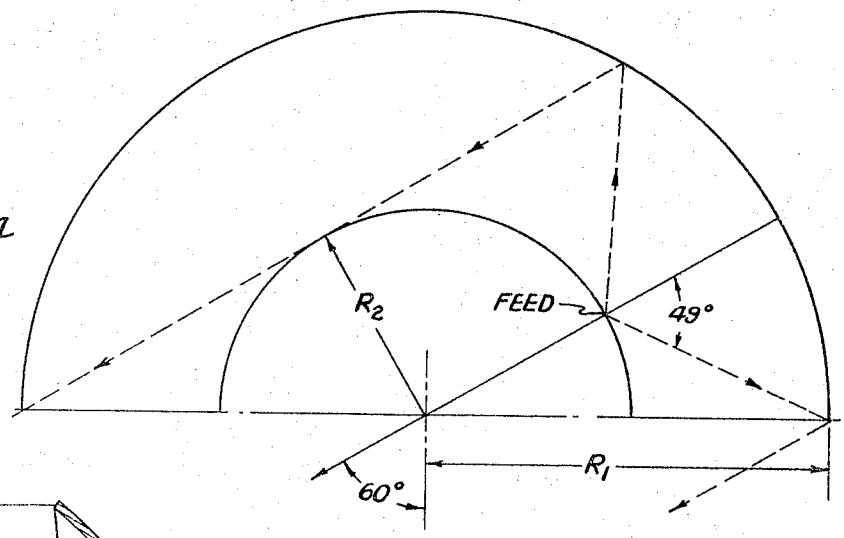

Fig. 4

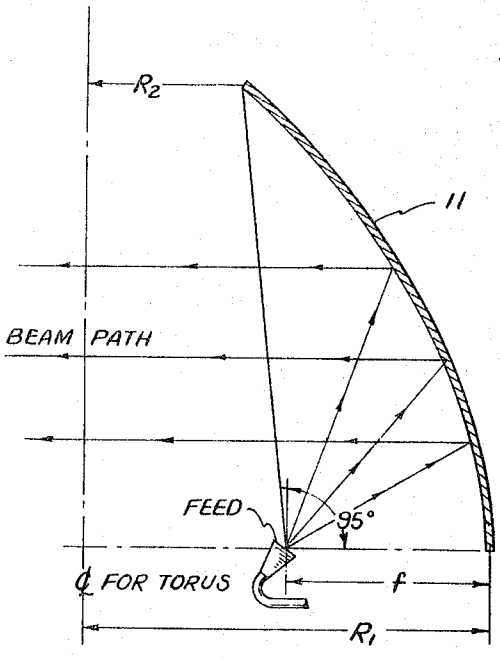

Fig. 5

INVENTOR
Kenneth S. Kelleher

BY

Glenn S. Overath
AGENT

United States Patent Office 3,317,912 Patented May 2, 1967

3,317,912

PLURAL CONCENTRIC PARABOLIC ANTENNA FOR OMNIDIRECTIONAL COVERAGE

Kenneth S. Kelleher, Mount Vernon Magisterial District, Va. (1115 Marine Drive, Alexandria, Va. 22307)

Filed July 29, 1963, Ser. No. 298,505
10 Claims. (Cl. 343—836)

This invention relates in general to microwave communication systems and in particular to an antenna device for use with multiple communication link stations.

This route transmission such as is involved in radio relay or tropospheric relay systems has presented numerous problems and many of these problems have yet to be overcome. Generally, it is desirable to develop thin routes in a number of radial directions at selected terminal points in cross-country systems. The antenna system chosen to provide this link between the terminal station and the stations remote therefrom is often required to have a high gain, that is, a large power output in each significant radial direction is required. Thus, an omnidirectional antenna which widely distributes the power output is impractical and directive beam means must be employed. Separate parabolic dish reflector antennas for each thin route, which provide directive beams of the order of 3 degrees, are frequently employed as the directive beam means in such cases and this solution has proven to be highly satisfactory in applications involving a few thin routes. It is obvious, however, that as the number of thin routes increases, the manifold compounding of size, weight, wind resistance, cost factors, etc., greatly complicates this solution to the problem. It will be appreciated that a microwave communication system antenna which enables communication over an unlimited number of thin routes involving a relatively small, lightweight, low cost structural assembly is needed and would be welcome as a substantial advancement of the art.

Accordingly:

It is an object of this invention to provide an improved multiple path microwave antenna system which permits servicing of an unlimited number of thin routes.

It is another object of this invention to provide an improved microwave antenna device wherein the over-all size of the structural assembly is not increased as the number of thin routes to be serviced is increased.

It is also an object of this invention to provide an improved microwave antenna device wherein the over-all weight of the structural assembly is not substantially increased as the number of thin routes to be serviced is increased.

It is a further object of this invention to provide an improved microwave antenna device wherein the wind resistance of the structural assembly is not increased as the number of thin routes to be serviced is increased.

It is still another object of this invention to provide an improved microwave antenna device wherein an increase in the number of thin routes to be serviced does not increase the cost factor in direct proportion thereto.

It is still another object of this invention to provide an improved microwave antenna device capable of directed beam communication with remote stations in any direction.

It is also an object of this invention to provide an improved microwave antenna which is readily adaptable to top or side mounting on conventional antenna masts.

It is an additional object of this invention to provide an improved microwave antenna device wherein any number of feed means may be trained on the reflector assembly.

It is still a further object of this invention to provide

an improved microwave antenna device wherein any number of feed means may be trained on the reflector assembly and the number may be varied without significant disturbance of the antenna system.

Other objects of this invention will become apparent upon a more comprehensive understanding of the invention for which reference is had to the following specification and drawing wherein:

FIGURE 1 is a pictorial showing of one embodiment of the antenna device of this invention.

FIGURE 2 is a plan view diagrammatic showing of the embodiment of FIGURE 1 in a communication link network.

FIGURE 3 is a diagrammatic showing in perspective of one segment of the reflector assembly in the embodiment of FIGURE 1.

FIGURE 4 is a diagrammatic plan view of the segment of the reflector assembly shown in FIGURE 3.

FIGURE 5 is a diagrammatic cross-sectional showing of the segment of the reflector assembly shown in FIGURE 3 together with a typical feed means therefor.

Briefly, the device of this invention is a microwave beaming device having a 360 degree capability in a selected plane in which a multi-segment single reflector assembly is employed with a plurality of individual feed means trained on this single assembly such that the energy output of each feed means is directed in beam form towards its respective target. The antenna is readily adaptable to mast mounting at any level on any basic mast structure.

Referring now to the drawings:

FIGURE 1 depicts one embodiment of the device of this invention by which a full 360 degree coverage may be obtained utilizing a three segment reflector assembly. In FIGURE 1, the three reflector segments **11**, **12** and **13** are shown atop a mast **14** with a plurality of feed means **21**, **22** and **23** trained on the segment **11** of the multi-segment reflector assembly. A simple support means **15** is shown in FIGURE 2 which serves to maintain the reflector segments in a selected physical relation. This type of support means is not critical to the invention, of course, and other types such as a ring or a disc could be substituted as desired. It will be appreciated that the reflector segments **12** and **13** also have feed means associated therewith and trained in like manner to the feed means associated with reflector segment **11**. The feed means associated with segments **12** and **13** are not shown in FIGURE 1 due to the drawing perspective but may be clearly seen in the plan view of FIGURE 2.

In accordance with the invention, each of the reflector segments **11**, **12** and **13** are of the parabolic torus variety which, as is well known in the art, may be derived by rotating a portion of a parabola about a line parallel to the latus rectum. In FIGURE 1, three substantially 180 degree parabolic torus segments are employed to provide 360 degree coverage. It will be appreciated that more than three parabolic torus segments may be employed if desired. A four segment arrangement may be desirable in a rectangular tower application, for example, where mechanical mounting requirements may be critical. In such instance, the segments may be of lesser degree and approximately 140 degrees has been found to be sufficient. It will be appreciated that a minimum number of reflector segments offers numerous advantages and that the three segment reflector shown in FIGURE 1 is generally preferred.

While only one multi-segment reflector is shown in the embodiment of FIGURE 1, it is understood that more than one multi-segment reflector assembly may be employed on the same mast and that in the case of a

second reflector assembly the two may be widely spaced thereon to function as relatively independent reflector assemblies or may be closely spaced in opposite relation with a common or adjacent feed means area for various mechanical and/or electrical advantages, if desired.

FIGURE 2 is a plan view showing of the antenna of this invention in an operative relation with a plurality of remote substations A, B, C, D, E, F, G, H and I. In FIGURE 2, the reflector segment **11** and three feed means **21**, **22** and **23** associated therewith enable communication with substations A, B and C, respectively; the reflector segment **12** and two feed means **24** and **25** associated therewith enable communication with substations D and E, respectively; and the reflector segment **13** and four feed means **26**, **27** **28** and **29** associated therewith enable communication with substations F, G, H and I, respectively. It is understood, of course, that the number of feed means associated with each respective reflector segment is not critical and that the number of feed means and the placement thereof may be altered as the application requires without significant disturbance of the over-all communication system.

As shown in FIGURE 2, the reflector segments **11**, **12** and **13** may be adapted to co-adjacent areas by means of beam crossover at various distances from the antenna assembly dependent upon direction of the overlapping beams. Thus, it will be appreciated that the antenna assembly of this invention may be oriented such that selected substations may be serviced by two separate directive beams from different reflector segments, if desired.

While each of the reflector segments and their respective feed means are shown substantially identical in the drawings, and thus the depicted antenna assembly is operative over a single band of frequencies, it is within the purview of this disclosure to provide dissimilarities, dimensional or otherwise, between the several reflector segments and feed means such that respective reflector segments and feed means are operative over different frequency bands. In the preferred embodiment the entire assembly is symmetrical and is operative over a single band of frequencies. However, it is apparent that in selected applications it may be desirable to communicate with selected substations utilizing more than one frequency and that in such instance this may be accomplished by proper asymmetrical design and orientation of the antenna of the present invention.

The operation and structure, of the antenna of this invention, may be best understood by consideration of a single beam path. As described in conjunction with FIGURE 2, each beam path is the product of a single reflector segment and one respective feed means. FIGURES 3, 4 and 5 depict a single reflector segment which is indicative of selected dimensional criteria.

As mentioned previously, each reflector segment surface is generated by rotating an arc of a parabola about a line parallel to the latus rectum. In the general case, the feed horn is positioned at the focal point of the parabola. As shown in FIGURES 3 and 5, one-half of the parabolic curve may be used and this half may be shortened at either top or bottom if desired to prevent reflected radiations from striking the feed system in one case and for other purposes.

Since the surface, as defined, is formed by rotating the arc about the line ZZ' in FIGURE 3, no change in performance is observable as the feed is rotated about the line ZZ'. Then, ideally, a plane wave front at any one feed position should dictate the same characteristic at other positions. It is well known, however, that a paraboloid is required for conversion of a spherical wave into a true plane wave and thus the curvature of the present invention merely affords an approximation of a plane wave. It has been found that a proper choice of the values for focal length f and for the reflector radius R_1 (FIGURE 3) will yield a surface which has a nearly plane reflected wave front.

In analysis of the reflector surface in terms of the various parameters, it is necessary to determine how closely the reflected wave front approaches the desired plane wave. It can be shown that the deviation of the wave front from a plane is given by:

$$\Delta = -2f(1-\cos\theta)\left[1-\frac{(1-f)\cos\theta}{z^2/4f+f}\right]$$

where θ, z and f are as indicated in FIGURE 3.

It is apparent from this equation that the deviation is zero in the plane defined by $\theta=0$. The function Δ can also be made to vanish by various combinations of f and z which would make the expression in the brackets zero.

It has been found, however, since $\Delta(f,z)$ changes rapidly in the neighborhood of such points, that there is no great advantage in basing an analysis upon the vanishing of the bracketed expression.

An analysis has been made by selecting values of $f(R_1=1)$ and computing the function Δ for various values of θ and z. It has been found that a f/R_1 ratio between 0.4 and 0.5 gives the smallest values of Δ.

In practical application, it has been found that a symmetrical reflector should have an f/R_1 ratio of about 0.45 since for such a case the deviation in the center of the reflector (z, FIGURE 3) is small. If an asymmetrical reflector is to be employed (from $z=0$ to $z=0.8$, for example), the f/R_1 ratio should be 0.43 since the deviation is then small in the region $z=0.4$. Of course, the optimum values can best be determined in each particular system on the basis of radiation patterns.

With the f/R_1 ratio established, other parameters can be considered. It has been found that a change in R_1 produces a scaling of the entire system and thus yields an increase or decrease in antenna beamwidth. When R_1 (and, therefore, f) are fixed, the maximum desirable values of z and θ can be considered. The coordinate z can be increased up to the point at which the parabolic arc intersects the axis of revolution ZZ' but, in practice, an increase in phase error with increase in z sets the maximum value.

The angle of rotation, θ, can be increased up to the point at which the surface begins to intercept reflected rays. Thus, if 45 degree polarization and 45 degree reflector elements were used, θ could be increased to 360 degrees. It is appreciated, however, that a conventional feed horn will not, in general, illuminate the entire surface, but only a portion thereof, for example, $\theta=+49°$ and $\theta=-49°$. Outside of this region of illumination it has been noted, the phase error increases rapidly.

It has been determined that the parabolic torus configuration is vastly superior to other configurations for the reflector of this antenna. For example, for small values of θ, the parabolic torus has small deviations approximating $\Delta=0$ for $\theta=0$. Thus the parabolic torus is inherently superior to the sphere, which has zero deviation in the center and in limited regions elsewhere.

The antenna of this invention has been compared with the many parabolic dish antennas which it supersedes in the thin route application. For gain factors less than 35 db, for example, the antenna of this invention has been found to equal the parabolic dish antenna in pattern efficiency. For higher gains, a slightly larger reflector area has been found to be desirable.

FIGURE 4 is a plan view of one segment of the reflector in the device of this invention which shows a typical illumination of the reflector. It will be appreciated that the angular designations are arbitrarily chosen for purposes of illustration and that this invention is not restricted to feed means having such an illumination characteristic. Further, the radius R_2 in each of the FIGURES 3, 4 and 5 is merely for purposes of reference and is in no way controlling in the design of the antenna re-

flector segments. As pointed out previously, the parabolic arc which forms the parabolic torus can be shortened at either end as desired, within practical limits.

FIGURE 5 is a cross-sectional view of one segment of the reflector wherein the relation of the point of feed to the reflector surface is illustrated in greater detail. In FIGURE 5, the feed means is effectively below the reflector surface and out of the beam path. As a consequence, the number of feed means, the placement thereof and selected focal points, and the alteration of number and placement of feed means do not alter the radiation characteristics of the antenna.

A practical embodiment of the antenna of this invention with a f/R_1 ratio of 0.46 and with an angle extent of 180 degrees for an f/D ratio of the parabola equivalent to 0.4 which is intended to replace a plurality of six-foot diameter parabolic dishes (D–6) might have an f dimension of 2.4 feet and an R_1 dimension of 5.22 feet.

It is understood that the exemplary embodiment of FIGURE 1 is merely illustrative of the invention and that various modifications in accordance with standard practice in the art are within the purview of this disclosure. For example, other truncation of the parabolic torus segments or no truncation of the reflector segments is to be anticipated in selected applications for various reasons peculiar to these applications. Also, the axis of rotation of the several reflector segments may be parallel to the center line of the reflector assembly, as shown, or alternatively, at any selected angle relative thereto and this relation to the center line may be adjustable, by means not shown, for more versatile application of the device.

Likewise, it is not essential that the parabolic curvature be as illustrated and a greater or lesser degree of curvature is permissible.

Further various support techniques may be employed to position the reflector segments in their respective relation. Indeed, the reflector segments may be formed as a unitary structure of whatever material is appropriate including nonreflective material, if desired, provided, of course, suitable provision is made for reflective parabolic torus surfaces.

In addition, this invention is not restricted to any particular type of feed means and any presently existing or subsequently developed feed means which may be adapted to serve the purposes of the antenna of this invention may be substituted. Moreover, the antenna of this invention may be employed to beam microwave energy having polarization characteristics other than as indicated, if desired.

Finally, it is understood that this invention is only to be limited by the scope of the claims appended hereto.

What is claimed is:

1. An omnidirectional microwave antenna having a relatively high gain characteristic in predetermined radial directions about a selected center line and adapted for use in thin route communication systems comprising a reflector assembly having a plurality of N wave energy reflective surface segments, each of said segments having a reflective surface configuration of the parabolic torus variety with respective axis of rotation, said axis of rotation being substantially equidisposed with respect to each other about said selected center line, each of said segments

disposed with its respective reflective surface facing outward relative to said selected center line; and a plurality of wave energy feed means disposed to direct wave energy at each of said respective N wave energy reflective surface segments of said reflector assembly such that wave energy may be reflected therefrom in predetermined directions, said wave energy feed means being disposed in a common plane and being spaced equidistantly from the respective reflective surface segments toward which wave energy is directed.

2. A microwave antenna as defined in claim **2** wherein said respective axis of rotation of each of said reflective surface segments are in parallel relation with said selected center line.

3. A microwave antenna as defined in claim **1** wherein said reflector assembly has a plurality of three wave energy reflective surface segments.

4. A microwave antenna as defined in claim **2** wherein said reflector assembly has a plurality of three wave energy reflective surface segments.

5. A microwave antenna as defined in claim **3** wherein each of said reflective surface segments substantially extend an arc of between 120 and 180 degrees in the circular plane thereof.

6. A microwave antenna as defined in claim **4** wherein each of said reflective surface segments substantially extend an arc of between 120 and 180 degrees in the circular plane thereof.

7. A microwave antenna as defined in claim **3** wherein each of said reflective surface segments substantially extend an arc of approximately 180 degrees in the circular plane thereof.

8. A microwave antenna as defined in claim **4** wherein each of said reflective surface segments substantially extend an arc of approximately 180 degrees in the circular plane thereof.

9. A microwave antenna as defined in claim **2** wherein said feed means are substantially disposed in a common plane and said selected center line is in perpendicular relation to said common plane.

10. A microwave antenna as defined in claim **3** wherein said three reflective surface segments of said reflector assembly are substantially identical and said feed means are substantially disposed in a common plane, substantially equidistant said surface.

References Cited by the Examiner

UNITED STATES PATENTS

1,939,345	12/1933	Gerth et al.	343—836
2,540,518	2/1951	Gluyas	343—840 X
2,955,288	10/1960	Palmer	343—779
2,989,747	6/1961	Atchison	343—779
3,011,167	11/1961	Alford	343—836
3,016,531	1/1962	Tomiyasu et al.	343—779

FOREIGN PATENTS

818,131	6/1937	France.

ELI LIEBERMAN, *Primary Examiner.*

HERMAN KARL SAALBACH, *Examiner.*