(12) INTERNATIONAL APPLICATION PUBLISHED UNDER THE PATENT COOPERATION TREATY (PCT)

(19) World Intellectual Property Organization
International Bureau

(43) International Publication Date
1 December 2016 (01.12.2016)

WIPO | PCT

(10) International Publication Number
WO 2016/190888 A1

(51) International Patent Classification:
H01R 13/6464 (2011.01)

(21) International Application Number:
PCT/US2015/033903

(22) International Filing Date:
3 June 2015 (03.06.2015)

(25) Filing Language: English

(26) Publication Language: English

(30) Priority Data:
62/008,013 5 June 2014 (05.06.2014) US

(71) Applicant: **BEL FUSE (MACAO COMMERCIAL OFFSHORE) LTD.** [CN/CN]; Rua De Xangai No. 175, Edificio Da Associacao Commercial De Macau, 13 Andar H-J Macau (CN).

(72) Inventors; and
(71) Applicants : **BELOPOLSKY, Yakov** [US/US]; 2407 W. Bayberry Drive, Harrisburg, PA 17112 (US). **GUTTER, David, Henry** [US/US]; 9405 Church Street, Felton, PA 17322 (US). **MAROWSKY, Richard, D.** [US/US]; 801 Willow Ridge Drive, York, PA 17404 (US). **ELLIS, Mark** [US/US]; 140 Scott Road, York, PA 17403 (US).

(74) Agent: **SHOUSE, Emily A.**; Patterson Intellectual Property Law, PC, 1600 Division Street, Suite 500, Nashville, Tennessee 37203 (US).

[Continued on next page]

(54) Title: NETWORK INTERFACE CONNECTOR WITH PROXIMITY COMPENSATION

(57) Abstract: A network interface connector includes a plurality of first and second alternating elongate contacts having contact portions situated in a common plane. The first and second contacts have rearward portions situated in respective first and second spaced parallel planes defining a proximity gap between them. A proximity insert having a particular electrical construction suited for a particular application is situated, preferably in a replaceable manner, in the proximity gap to provide the connector with desired transmission properties.

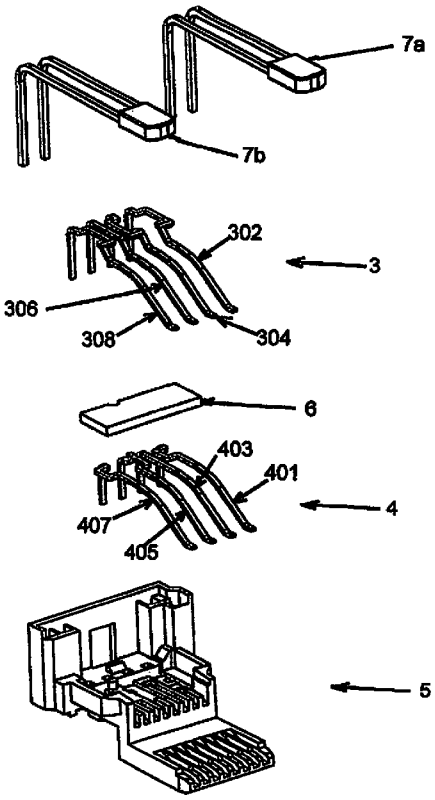

FIG. 1A

WO 2016/190888 A1

(81) **Designated States** *(unless otherwise indicated, for every kind of national protection available)*: AE, AG, AL, AM, AO, AT, AU, AZ, BA, BB, BG, BH, BN, BR, BW, BY, BZ, CA, CH, CL, CN, CO, CR, CU, CZ, DE, DK, DM, DO, DZ, EC, EE, EG, ES, FI, GB, GD, GE, GH, GM, GT, HN, HR, HU, ID, IL, IN, IR, IS, JP, KE, KG, KN, KP, KR, KZ, LA, LC, LK, LR, LS, LU, LY, MA, MD, ME, MG, MK, MN, MW, MX, MY, MZ, NA, NG, NI, NO, NZ, OM, PA, PE, PG, PH, PL, PT, QA, RO, RS, RU, RW, SA, SC, SD, SE, SG, SK, SL, SM, ST, SV, SY, TH, TJ, TM, TN, TR, TT, TZ, UA, UG, US, UZ, VC, VN, ZA, ZM, ZW.

(84) **Designated States** *(unless otherwise indicated, for every kind of regional protection available)*: ARIPO (BW, GH, GM, KE, LR, LS, MW, MZ, NA, RW, SD, SL, ST, SZ, TZ, UG, ZM, ZW), Eurasian (AM, AZ, BY, KG, KZ, RU, TJ, TM), European (AL, AT, BE, BG, CH, CY, CZ, DE, DK, EE, ES, FI, FR, GB, GR, HR, HU, IE, IS, IT, LT, LU, LV, MC, MK, MT, NL, NO, PL, PT, RO, RS, SE, SI, SK, SM, TR), OAPI (BF, BJ, CF, CG, CI, CM, GA, GN, GQ, GW, KM, ML, MR, NE, SN, TD, TG).

Published:

— *with international search report (Art. 21(3))*

NETWORK INTERFACE CONNECTOR WITH PROXIMITY COMPENSATION

Reference is made to U.S. provisional patent application Serial No. 62/008,013 filed June 5, 2014, the filing date of which is hereby claimed.

BACKGROUND OF THE INVENTION

Network interface connectors are components of networking active equipment such as routers, switches, controllers and network interface cards. Only the mateable interface geometry proper of these connectors is covered by the modular connector standards.

The transmission properties of these connectors usually vary depending upon the PCB impedance and other components utilized in the active networking equipment printed wiring boards. For these reasons the transmission properties, while being critical for the equipment functionality, are not covered by U.S. or international standards, but are defined by each equipment manufacturer based on its own system experimental evaluation.

Network interface connectors require designers to address and solve a combination of unique transmission parameters as well as other limitations common to modular connectors. These include:

- Low profile,
- Variable transmission parameters to be tuned from one application to another. The major transmission parameters are:
  - Near End Cross Talk (NEXT),
  - Return Loss, and
  - Common Mode Noise,
- Completely self-contained compensation for e.g., NEXT, return loss, and common mode noise and
- Multiport or single port, shielded or unshielded with condition - indicating LEDs.

Network equipment providers market a large variety of appliances for 10/100 MbE, 1GbE and 10GbE. Network interface connectors are integral parts of these appliances. The application market requires both single port and multiport connectors. The connectors are soldered to multi-layer motherboards together with other components such as PHY, resistors, magnetics, capacitors, etc.

Moreover, network applications require smaller and denser designs because, in part, the motherboard PCBs are multilayer and expensive.

Conventional techniques for enhancing the transmission performance of connectors on a motherboard PCB can be very costly. An RJ45 standard connector is often the tallest component on the PCB – so its height over the PCB needs to be reduced without sacrificing the standard dimensions.

While the outline and dimensions of modular connectors are subject to U.S. and international standards such as IEC 600603-7 and TIA 568 series, the internal designs of connectors differ widely.

The desired transmission properties of these connectors usually vary depending upon the PHY input impedance and other components utilized in the active networking equipment printed wiring boards.

Typical transmission requirements commonly referred to as categories (category 5e is characterized up to 100 MHz, category 6 up to 250 MHz and category 6a up to 500 MHz) are used as guidelines only.

The networking companies must have connectors of the same physical dimensions but be able to accommodate any one of a variety of options in transmission response. Moreover, the electrical response should differentiate for various transmission speeds. It is desirable for connectors, of identical appearance and footprint, provide matched electrical response for 10/100 Mbe, 1GbE or 10GbE chipsets. Presently, connectors are designed for specific issues such as a given common mode noise at a given frequency for a specific PHY.

The performance of a connector is judged by either direct measurement of the transmitted signals or by controlling the major transmission parameters such as NEXT, Return loss and Common mode noise and Common to Differential mode conversion. These

parameters are specified in the US in TIA 568-10 and internationally in the IEC 60603-7 standard series.

Low profile RJ45 connectors are known and are used as network interface connectors. Their interface geometry is still governed by the TIA 568 and IEC/ISO 60603-7 series of standards. However network interface connectors are not parts of the channel as defined by the standards.

Since the location of the PHY and/or other components in the channel, such as magnetics (filters and isolation transformers) and discharge capacitors, distorts the NEXT and Return Loss, the requirements for NEXT and RL compensation differ from application to application. In order to meet such requirements connector manufacturers supply different connectors to work with specific PHYs.

The transmission performance of RJ45 type network interface connectors is enhanced by internal compensation such as by providing compensation circuitry on an internal PCB or on flexible circuits. The connector contacts are soldered to the internal PCBs .

Presently, it is not feasible to enhance or modify the transmission characteristics of such connectors after they are soldered to the motherboard.

Tests of connectors are conducted using the exact network equipment and PHY specific to the application. In order to tune the performance for a particular application, connectors have to be de-soldered and removed from the motherboards, re-assembled or discarded and new connectors used. If a problem is found in the field, often the complete network installation has to be re-placed or scrapped.

It would be advantageous to be able to modify, upgrade or change the transmission characteristics and performance of a network interface connector after it has been soldered to a motherboard.

SUMMARY OF INVENTION

Accordingly, it is an object of the present invention to provide a new and improved network interface connector, the electrical properties and transmission characteristics of which can be easily modified, upgraded or changed.

It is another object of the present invention to provide such a new and improved network interface connector, the electrical properties and transmission characteristics of which can be easily modified, upgraded or changed after it has been soldered to a motherboard.

Still another object of the present invention is to provide such a new and improved network interface connector of the modular type whose mateable interface geometry conforms with modular connector standards.

Still another object of the present invention is to provide such a new and improved network interface connector which has a single port or multiple ports.

Still another object of the present invention is to provide such a new and improved network interface modular connector for applications for at least 1GbE.

Still another object of the present invention is to provide such a new and improved network interface modular connector which has a low profile and which can be mounted mid-board.

Still another object of the present invention is to provide such a new and improved network interface modular connector the components of which are easy to manufacture at low cost using conventional methods and equipment.

Still another object of the present invention is to provide such a new and improved network interface connector the transmission enhancements of which, such as compensation, are situated within the connector.

Still another object of the present invention is to provide such a new and improved network interface connector which meets selected specified requirements when tested as specified in TIA 568A and IEC 60603-7.

Still another object of the present invention is to provide such a new and improved network interface connector which can be customized to a high degree to differentiate from 1GbE to other limits specified by customers.

Still another object of the present invention is to provide such a new and improved network interface connector which can be shielded or unshielded and can be provided with condition-indicating LEDs.

Briefly, these and other objects are attained by providing a network interface connector comprising an outer housing and a contact assembly situated in the outer housing. The contact assembly includes a mounting block, a first group of first or upper elongate contacts mounted on the mounting block and a second group of second or lower elongate contacts mounted on the mounting block. The first and second elongate contacts are configured such that contact portions of the first and second contacts are coplanar and spaced according to U.S. and international standards for modular connectors. The first and second elongate contacts have rearward portions that are situated in first and second spaced parallel planes respectively to define a proximity gap between them. A proximity insert is situated, preferably removably, in the proximity gap between the rearward portions of the first and second elongate contacts.

The proximity insert preferably extends between the rearward portions of all of the first and second contacts.

The construction of the proximity insert is chosen in view of the desired transmission and electrical properties of the connector. For example, the proximity insert can be constituted by a printed circuit board having conductors coupled to the elongate contacts. The proximity insert can be formed of a non-conductive material or of a material having a high dielectric constant, such as $BaTio_2$ or ceramics. Alternatively, the proximity insert can be formed of a metallic material coated with an isolating material such as polymide, PBT or acrylic paint, or be formed of ferrite.

The contact portions of the first and second contacts preferably alternate with one another. The first and second groups of elongate contacts preferably include four first elongate contacts and four second elongate contacts. At least one pair of first and second elongate contacts cross over each other.

The connector either has a single port or multiple ports. In a multiple port embodiment a contact assembly is associated with each port. The contact assemblies are configured such that the proximity gaps of the contact assemblies are aligned with each other and single proximity insert is configured to be situated, preferably removably, in aligned proximity gaps.

DETAILED DESCRIPTION OF THE DRAWINGS

A more complete appreciation of the present invention and many of the attendant advantages thereof will be readily understood by reference to the accompanying drawings which illustrate preferred embodiments of the invention wherein:

Fig. 1A is an exploded perspective view showing the components of a contact assembly, namely upper and lower contact arrays, a mounting block, a proximity insert and optional LEDs, of a preferred embodiment of a network interface connector according to the present invention;

Fig. 1B is an exploded perspective view showing the assembled contact assembly, outer housing and shield of a network interface connector according to the invention;

Fig. 2 is a perspective view showing the operative positions of the elongate contacts of upper and lower contact arrays of the contact assembly of Fig. 1 (mounted in a fixture for illustrative purposes);

Fig. 3 is a view similar to Fig. 2 showing a proximity insert of the contact assembly situated in a proximity gap defined between rearward portions of the contacts of the upper and lower contact arrays respectively;

Fig. 4 is a perspective view showing components of the contact assembly shown in Fig. 1 including a mounting block, contacts of the lower contact array mounted on the mounting block and two proximity inserts which are alternatively positioned for mounting on the mounting block over rearward portions of the contacts of the lower contact array;

Fig. 5 is a perspective view showing components of the contact assembly shown in Fig. 1 including a mounting block, contacts of the lower contact array mounted on the

mounting block and a proximity insert mounted over rearward portions of the contacts of the lower contact array;

Fig. 6 is a perspective view similar to Fig. 5 showing the contacts of the upper contact array positioned for mounting on the mounting block;

Fig. 7 is a perspective view of the assembled contact assembly shown in Fig. 1 showing the contacts of the upper contact array mounted on the mounting block, the rearward portions of the contacts of the upper contact array situated over the proximity insert;

Fig. 8 is a side section view of a modular network interface connector according to the present invention;

Fig. 9 is a perspective view showing a group of various embodiments of proximity inserts according to the present invention;

Fig. 10 is a perspective view similar to Fig. 6 showing a proximity insert comprising a printed circuit board;

Figs. 11(a) – (e) are plan views showing the proximity insert of Fig. 10 and the various layers constituting the printed circuit board;

Fig. 12 is a perspective view of a contact assembly of a preferred embodiment of a multi-port network interface connector according to the present invention;

Fig. 13 is a perspective view in section of a multi-port network interface connector in accordance with the present invention;

Fig. 14 is a perspective view of the multi-port network interface connector shown in Fig. 13 and showing a slot for receiving a proximity insert;

Fig. 15 is a perspective view of the multi-port network interface connector shown in Figs. 13 and 14 and showing a proximity insert being received in the slot shown in Fig. 14;

Fig. 16 is a perspective view showing a group of various embodiments of proximity inserts for use in a multi-port network interface connector according to the present invention;

Fig. 17 is a perspective view of elongate contacts of a lower contact array showing a capacitive adjustment feature; and

Figs. 18(a) and (b) are graphs plotting electrical responses of the same connector incorporating different proximity inserts.

DESCRIPTION OF PREFERRED EMBODIMENTS

Referring now to the drawings in which like reference characters designate identical or corresponding parts throughout the several views and, more particularly to Figs. 1a and 1b, the components of a modular network interface connector, generally designated 10 (shown assembled in Fig. 9), are illustrated in exploded views. The components include an outer housing 1 and a contact assembly, generally designated 8. The contact assembly 8 includes an upper or first contact array 3 comprising four first elongate contacts 302, 304, 306 and 308 (Fig. 2), a lower or second contact array 4 comprising four second elongate contacts 401, 403, 405 and 407 (Fig. 2), a mounting block 5 on which the first and second contacts of the upper and lower contact arrays 3 and 4 are mounted and a proximity insert 6 situated between rearward portions of the first and second contacts.

According to the invention, a variety of different proximity inserts are possible for use in particular applications to achieve desired electrical properties and improved transmission characteristics.

As described below, the contact assembly 8 is assembled and situated within the outer housing 1. A metallic shield 2 is optionally provided around housing 1 for use in a shielded system as is conventional. A pair of conditioning-indicating LEDs 7a and 7b and leads are optionally provided.

Referring to Fig. 2, the configuration of the elongate contacts when mounted on the mounting block 5 (not shown in Fig. 2) is illustrated. A fixture F is shown for illustrative purposes and does not comprise a part of the connector. The first elongate contacts 302, 304, 306 and 308 of the upper contact array 3 each have a forward contact portion a and a rearward portion b, and the second elongate contacts 401, 403, 405 and 407 of the lower contact array 4 each have a forward contact portion a and a rearward portion c. The first and second elongate contacts are configured such that, when mounted on the contact mounting block 5 (not shown in Fig. 2), the contact portions a of the first and second elongate contacts

401, 302, 403, 304, 405, 306, 407 and 308 are coplanar, the rearward portions b of the first elongate contacts 302, 304, 306 and 308 are coplanar, situated in a first plane 30 (Fig. 3), and the rearward portions c of the second elongate contacts 401, 403, 405 and 407 are coplanar, situated in a second plane 40 (Fig. 3) which is parallel to and spaced from the first plane by a distance g which defines a proximity gap 50 (Fig. 3). A pin portion d extends downwardly from the rearward end of each of the rearward portions b and c of the first and second contacts of arrays 3 and 4. The dimensions and spacing of the contact portions a of the first and second contacts conform to U.S. and international standards for modular connectors.

The proximity insert 6 preferably comprises a body having the shape of a thin rectangular prism having opposed parallel upper and lower faces 32, 42, although other shapes are possible. The thickness of the proximity insert 6, i.e., the distance between the upper and lower surfaces 32 and 42 of the proximity insert 6, is substantially equal to or slightly smaller than the distance g of the proximity gap 50 and is within the range of between about .01″ to 0.2″. The proximity insert 6 is situated in the proximity gap 50 as shown in Fig. 3. The rearward portions b and c of the first and second elongate contacts of the contact arrays 3 and 4 may engage or may be slightly spaced from the opposed surfaces 32, 42 of the proximity insert 6 depending on the application.

Referring to Figs. 4 and 5, the contact mounting block 5 is formed of an insulative material, e.g., plastic, and includes a rear framework 12 having a transverse vertical rear wall 14 and a pair of longitudinally extending vertical side walls 16. An upper horizontal shelf 18 extends forwardly from the framework 12 and a lower horizontal shelf 20 extends forwardly from the upper shelf 18. Another pair of vertical side walls 22 extend upwardly from the transverse ends of lower shelf 20. Four longitudinal recesses 24 are formed in the lower shelf 20, which open onto the forward vertical surface of a vertical transverse wall 26 depending downwardly from the forward end of the lower shelf 20. A horizontal wall 28 extends forwardly from the lower end of vertical transverse wall 26. Four transversely spaced vertical through-holes 34 open onto the horizontal shelf 18 and four transversely spaced vertical through-holes 36 open onto the lower horizontal shelf 20. Through-holes 34 and 36 are situated in alternating longitudinal alignment. Eight longitudinal guide recesses 38 are formed at the forward end region of the horizontal wall 28.

The second elongate contacts 401, 403, 405 and 407 of the lower contact array 4 are mounted on the mounting block 5 by inserting their pin portions d through the holes 36 of the lower shelf 20. The rearward portions c of the contacts are received in respective ones of the recesses 24 formed in the lower horizontal shelf 20. The contacts have rectangular cross-sections and the upper surfaces of the rearward portions c are substantially coplanar with, or slightly recessed from, the upper surface of shelf 20. The contact portions a of the second contacts 401, 403, 405 and 407 slant downwardly from the forward ends of the recesses 24 of lower horizontal shelf 20 and are coplanar with each other. The forward ends of the contact portions a of contacts 401, 403, 405 and 407 are situated in the first, third, fifth and seventh guide recesses 38 (as seen from the right side of the contact mounting block 5 in Fig. 4).

Still referring to Figs. 4 and 5, a proximity insert 6c, having a construction designed to provide certain electrical characteristics as described below, is situated over the rearward portions c of elongate contacts 401, 403, 405 and 407 so that its lower surface contiguously overlies the rearward contact portions c. (Two proximity inserts 6b and 6c are shown in Fig. 4 to indicate that a particular proximity insert can be selected from different possible constructions to provide particular electric characteristics to achieve desired transmission properties.) The proximity insert 6c is bounded on its sides by the vertical side walls 22 of mounting block 5. A pair of rearward facing vertical shoulders 52 and a forward facing vertical wall 54 extending between the upper and lower horizontal shelves 18 and 20 bound the forward and rearward surfaces of proximity insert 6c. As seen in Fig. 5, the upper surface of proximity insert 6c is substantially coplanar with the upper horizontal shelf 18. A notch 5b is formed in the rear surface of the proximity insert 6c closer to one of its sides than the other and a corresponding protuberance 58 extends from the forward facing wall 54 which assures proper orientation of the proximity insert 6c on the mounting block 5.

The thickness of the proximity insert 6c is substantially equal to the size g of the proximity gap 50 (Fig. 3) which is substantially equal to the distance between the upper and lower horizontal shelves 18 and 20.

Referring to Figs. 6 and 7, the first elongate contacts 302, 304, 306 and 308 of the upper contact array 3 are then mounted on the contact mounting block 5 (on which the second elongate contacts 401, 403, 405 and 407, and proximity insert 6c, are already mounted) by inserting their pin potions d through the holes 34 in the upper shelf 18. The rearward portions

b of the first elongate contacts contiguously overlie the upper surface of proximity insert 6c. The contact portions a of the first contacts 302, 304, 306 and 308 slant downwardly from the upper horizontal shelf and are coplanar with each other and with the contact portions a of second contacts 401, 403, 405 and 407. The forward ends of the contact portions a of the first contacts 302, 304, 306 and 308 are situated in the second, fourth, sixth and eighth guide recesses 38, i.e., alternating in position with the contact portions a of the second contacts 401, 403, 405 and 407.

As mentioned above, the rearward portions b, c of the elongate contacts of the first and second contact arrays 3 and 4 may engage or may be slightly spaced from the respective opposite surfaces of proximity insert 6 depending on the application. The proximity insert 6 is not soldered to any of the contacts. The assembly of first and second contacts of the upper and lower contact arrays 3 and 4 and the proximity insert 6c onto the mounting block 5 (as shown in Fig. 7) constitutes the contact assembly 8.

An advantage of the construction of the present invention is that the proximity insert is removable from the proximity gap after the connector has been soldered to a motherboard and replaceable by another proximity insert having different electrical characteristics to provide the connector with different transmission properties without de-soldering the connector from the motherboard. Referring to Fig. 7, in order to facilitate such replacement, slots 9 (shown only in Fig. 7) are formed in the side walls 22 aligned with the ends of the proximity insert 6c. When replacement with a different proximity insert is desired, the new insert is introduced through one of the slots 9 and inserted into the proximity gap. At the same time, the old insert is pushed out of the opposite slot 9. Appropriate openings are provided in the outer housing and shield. In this manner, the connector can be tuned for a particular application in the field without the need for de-soldering or replacement of the network installation.

Referring to Fig. 8, the contact assembly 8 is inserted into the outer housing 1 through its open rear side to complete the network interface connector 10. The leads of LEDs 7a and 7b are situated in vertical passages 60 formed in the rear framework 12 of the mounting block and bend forwardly so that the LEDs are situated at the front ends of respective horizontal passages 62. Metallic shield 2 is provided around the outer housing 1 as is conventional. A single port 64 is provided opening onto the front of connector 10 to receive a modular plug

connector having contacts situated to engage the contact portions a of the first and second elongate contacts. The outer housing 1 has a rearwardly extending lip 66 formed along the lower side of the front of port 64 to capture the free ends of the contact portions a of the elongate contacts.

Five possible proximity inserts 6a-6e which can alternatively be interchangeably incorporated as part of a single port connector 10 to achieve desired electrical characteristics in accordance with the invention are illustrated in Fig. 9.

Proximity insert 6a comprises a printed circuit board made of modified epoxy resin in which metal conductors are embedded. This embodiment is discussed in greater detail below in connection with Figs. 10 and 11.

Proximity insert 6b is formed of a non-conductive material having a low dielectric constant in a range of between about 1.1 to 3.7, such as plastic or paper or PTFE. This type of proximity insert prevents the rearward contact portions b and c from engaging each other when the proximity gap is small and provides necessary isolation for high voltages. Due to safety requirements, the connectors 10 must withstand 1000 volts between contacts. A proximity insert formed of high dielectric strength has better electrical performance than air.

Proximity insert 6c is formed of a material having a relatively high dielectric strength such as $BaTiO_2$ or a ceramic material. The proximity insert 6c increases coupling and correspondingly increases the differential Near End Crosstalk between contacts 302 and 401 which may be of opposite phase to the crosstalk at a different part of a complete transmission line, i.e., in the modular plug. As a result, overall crosstalk will be reduced.

Proximity insert 6d is formed of metal covered on both its upper and lower surfaces with isolating material such as polyimide or PBT or acrylic paint. Such construction reduces impedance possibly to the characteristic impedance of the line in the immediate vicinity of PHY resulting in better balance and corresponding better Return Loss.

Proximity insert 6e is formed of ferrite material so as to comprise a low pass filter attenuating unwanted parasitic common and differential noise as well as attenuating some of the high frequency portion of the signal spectra, resulting in higher fidelity and improvements in noise to signal ratios.

Fig. 10 illustrates the assembly of the first upper contacts to the mounting block 5 subsequent to the mounting of the second lower contacts and a PCB type proximity insert 6a onto the mounting block 5. The proximity insert 6a contains a capacitive pattern that provides compensation for Near End Cross Talk. The proximity insert 6a is formed of four layers including a top layer (Fig. 11b), a mid-top layer (Fig. 11c), a mid-bottom layer (Fig. 11d) and a bottom layer (Fig. 11e). The PCB connects or is located in close proximity to the rearward portions b of upper contacts 302, 306 and to the rearward portions c of lower contacts 403 and 405. Additional conductor patterns of the PCB can be provided to increase or reduce the characteristic impedance providing a better match to the dominant impedance of the PHY and thus reducing the reflections and therefore improving Return Loss.

While the illustrated embodiments of the proximity inserts fill the proximity gap between the rearward portions of all of the contacts of the upper and lower arrays, the length of the proximity inserts can be shorter and fill the proximity gap between only some of the contacts and still achieve improved transmission properties.

Referring to Figs. 12-15, a multiport (four ports) embodiment of a network interface connector according to the invention, designated 10′, is shown. The multiport contact assembly 80 is shown in Fig. 12 and essentially constitutes a single elongated contact mounting block 5′ having four spaced contact assemblies 8′ each basically identical to the structure of the contact assembly 8 of the single port embodiment. The proximity gaps 50 of the four contact assemblies 8′ are aligned with each other and a single elongated proximity insert 6′ extends through the four proximity gaps. As shown in Fig. 16, a variety of such elongated proximity inserts, such as inserts 6f-6l, are provided having the same constructions as proximity inserts 6a-6e described above.

The multiport contact assembly 80 is situated in an appropriately formed multiport outer housing 1′ which may be covered by a shield 2′ as seen in Fig. 12.

As seen in Figs. 12, 14 and 15, a slot 9 is provided at opposite ends of the mounting block 5′ and outer housing in alignment with the proximity gaps 50. The proximity insert 6f can be situated into the proximity gaps 50 by inserting it through the slot 9. As the proximity

insert is inserted through a slot 9 at one end of the housing 1, any previously situated proximity insert will be pushed out of the contact assembly 8 by the new proximity insert through the slot at the other end of the housing. Such a procedure can be effected even after the connector 10′ is soldered to the motherboard.

Referring to Fig. 17, according to another aspect of the invention, a capacitive adjustment contact extension 11 is provided on a rearward portion c of at least one of the lower elongate contacts of the lower contact array 4, e.g., elongate contact 405. The contact extension 11 is not in the path of the signal and functions to allow alternative tuning of the transmission properties of the connector. The extension 11 is stamped using an optional die cutting tool. Several extensions 11 having varying lengths are possible. The extension cannot be seen by the user and does not affect the mechanical appearance or function of the connector. It does, however, provide a fine tune adjustment of transmission parameters.

Fig. 18 is a graphical illustration showing significant differences in the electrical responses, namely in Forward NEXT, when the same connector is used with inserts 6a and 6b.

Numerous modifications and variations of the illustrated preferred embodiments are possible in light of the above teachings within the scope of the claims appended hereto.

CLAIMS

1. A network interface connector, comprising:

an outer housing; and

a contact assembly situated in said outer housing, said contact assembly including

a mounting block,

a first group of first elongate contacts mounted on said mounting block, said first elongate contacts each having a contact portion and a rearward portion,

a second group of second elongate contacts mounted on said mounting block, said second elongate contacts each having a contact portion and a rearward portion,

said first and second elongate contacts configured such that said contact portions of said first and second elongate contacts are coplanar and such that said rearward portions of said first and second elongate contacts are situated in first and second parallel spaced planes respectively to define a proximity gap between them, and

a proximity insert situated in said proximity gap between said rearward portions of said first and second contacts, said proximity insert having certain electrical characteristics which provide the connector with certain transmission properties.

2. A network interface connector as recited in claim 1, wherein said proximity insert is removably situated in said proximity gap such that said proximity insert is removable from said proximity gap and replaceable by another proximity insert having different electrical characteristics to provide the connector with different transmission properties.

3. A network interface connector as recited in claim 2 wherein said proximity insert is removable from said proximity gap after the connector has been soldered to a motherboard and replaceable by another proximity insert without de-soldering the connector.

4. A network interface connector as recited in claim 3, wherein a pair of slots are formed in opposed sides of said mounting block in alignment with said proximity gap, said slots configured to enable said proximity insert to pass therethrough.

5. A network interface connector as recited in claim 1, wherein said proximity insert has the shape of a thin rectangular prism.

6. A network interface connector as recited in claim 5, wherein said proximity insert has a thickness in the range of between .01″ to 0.1″.

7. A network interface connector as recited in claim 1, wherein said proximity insert comprises a printed circuit board having conductors coupled to at least some of said elongate contacts.

8. A network interface connector as recited in claim 1, wherein said proximity insert is formed of non-conductive material.

9. A network interface connector as recited in claim 1, wherein said proximity insert is formed of a high dielectric constant material.

10. A network interface connector as recited in claim 9, wherein said material comprises $BaTiO_2$.

11. A network interface connector as recited in claim 9, wherein said material comprises a ceramic.

12. A network interface connector as recited in claim 1, wherein said proximity insert is formed of a metallic material having surfaces coated with electrical isolating material capable of withstanding the application of 500 VDC for 60 seconds.

13. A network interface connector as recited in claim 12, wherein said isolating material comprises polyimide.

14. A network interface connector as recited in claim 12, wherein said isolating material comprises PBT.

15. A network interface connector as recited in claim 12, wherein said isolating material comprises acrylic paint.

16. A network interface connector as recited in claim 1, wherein said proximity insert is formed of ferrite.

17. A network interface connector as recited in claim 1, wherein said contact portions of said first elongate contacts alternate in position with said contact portions of said second elongate contacts.

18. A network interface connector as recited in claim 1, wherein said proximity insert is situated between the rearward portions of all of said first and second elongate contacts.

19. A network interface connector as recited in claim 1, wherein said rearward portions of at least one pair of first and second elongate contacts overlap each other.

20. A network interface connector as recited in claim 1, wherein said connector comprises a single port connector.

21. A network interface connector as recited in claim 1, wherein said connector comprises a multiport connector, and wherein said connector includes multiple contact assemblies, each contact assembly having a respective proximity gap.

22. A network interface connector as recited in claim 21, wherein said proximity gaps of said multiple contact assemblies are in aligned positions, and wherein said proximity insert is configured such that it extends through multiple aligned proximity gaps.

23. A network interface connector as recited in claim 22, wherein a pair of slots are formed in opposed sides of said mounting block in alignment with said proximity gaps, said slots configured to enable said proximity insert to pass therethrough.

24. A network interface connector as recited in claim 1, wherein said mounting block includes a first upper shelf and a second lower shelf, each of said first

and second shelves having through-holes formed therein, and wherein said first and second elongate contacts include pin portions extending from said rearward portions, said pin portions of said first elongate contacts extending through said through-holes formed in said first upper shelf, and said pin portions of said second elongate contacts extending through said through-holes formed in said second lower shelf.

25. A network interface connector as recited in claim 1 wherein said proximity insert has a thickness substantially equal to or slightly smaller than the height of said proximity gap.

26. An elongate contact for use in a network interface connector comprising a forward contact portion, a rearward portion and a pin portion all in a signal path, and a capacitive adjustment contact extension provided on said rear portion which is out of the signal path.

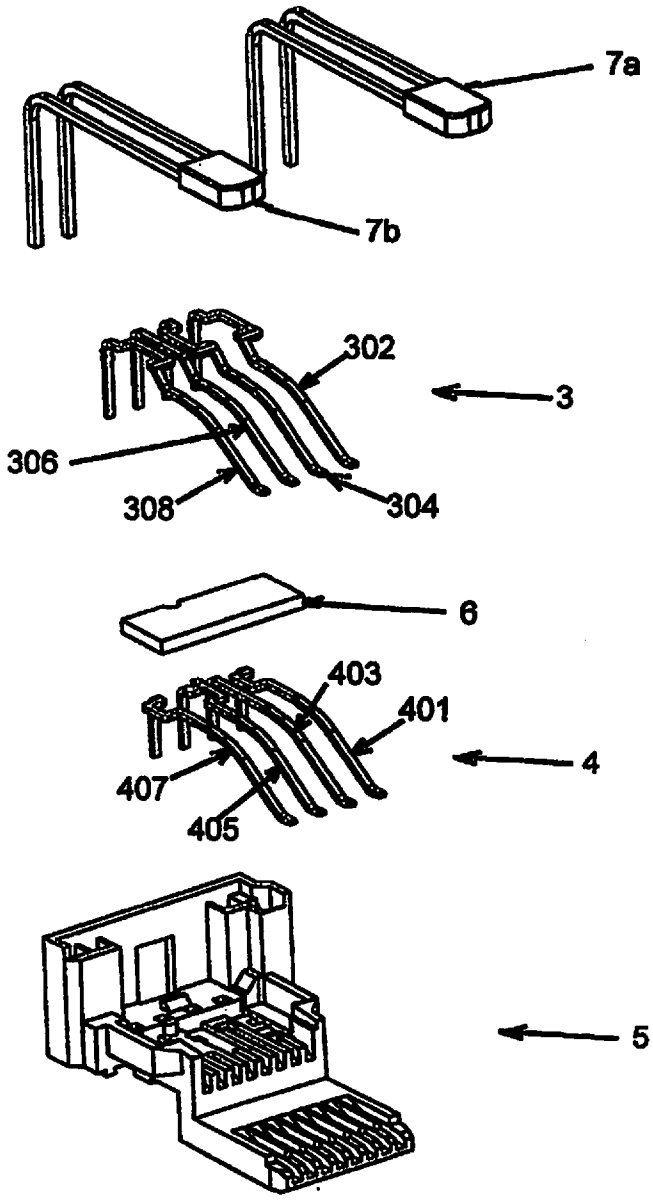

FIG. 1A

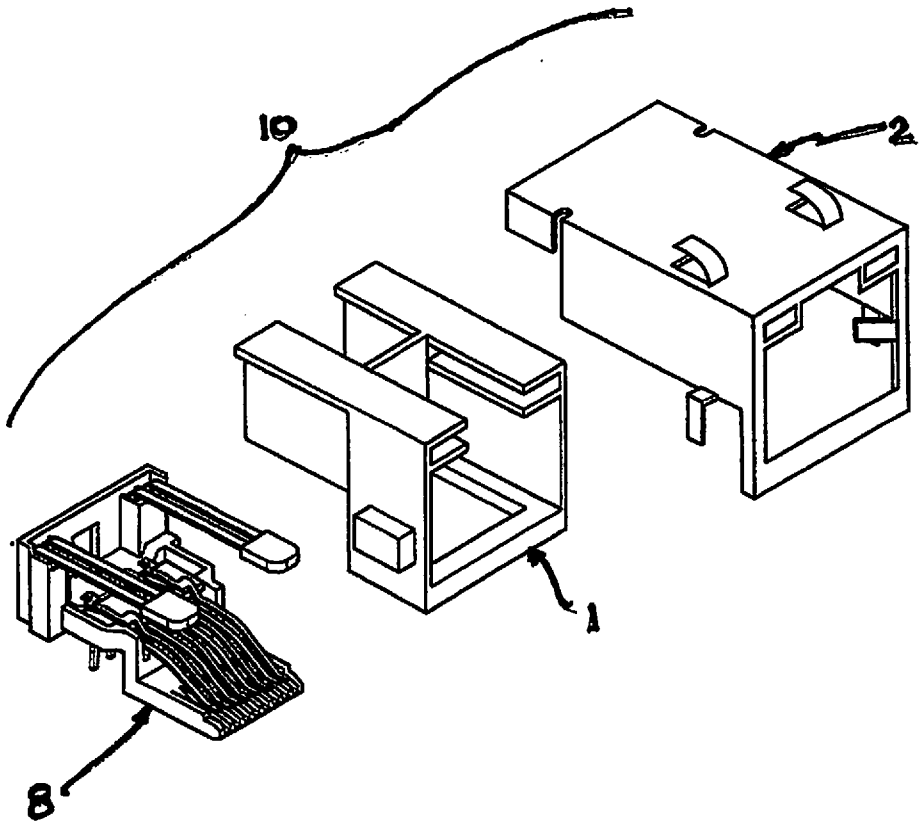

FIG. 1B

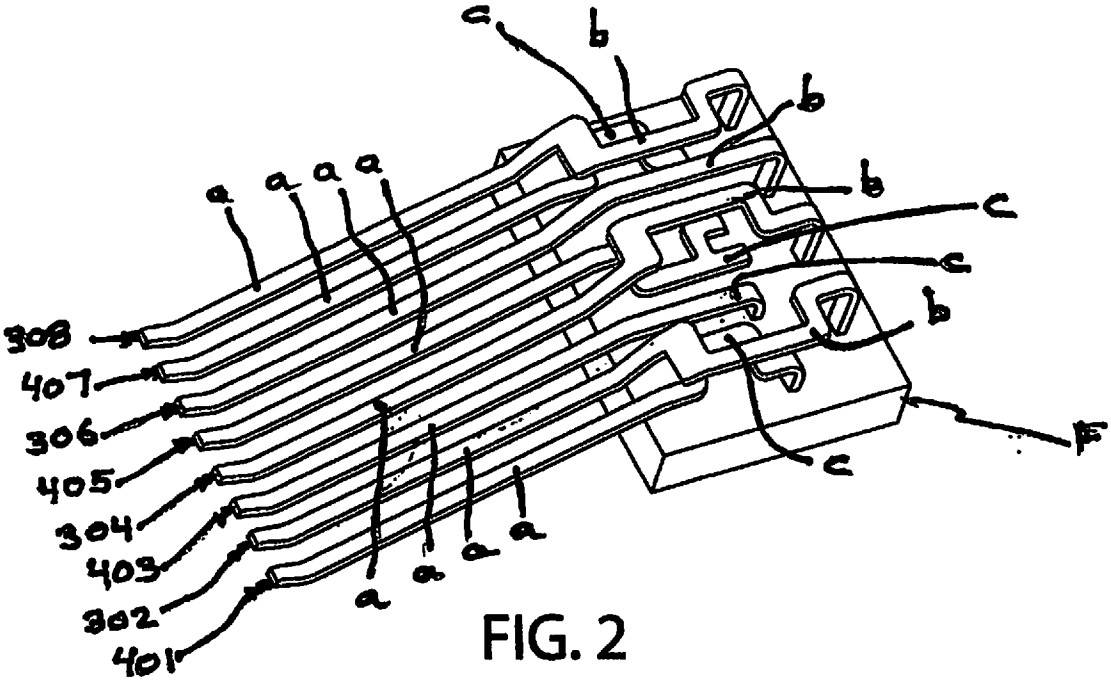
a
b
b
b
c
c
b
c
F
a a a a
308
407
306
405
304
403
302
401
a a a a

FIG. 2

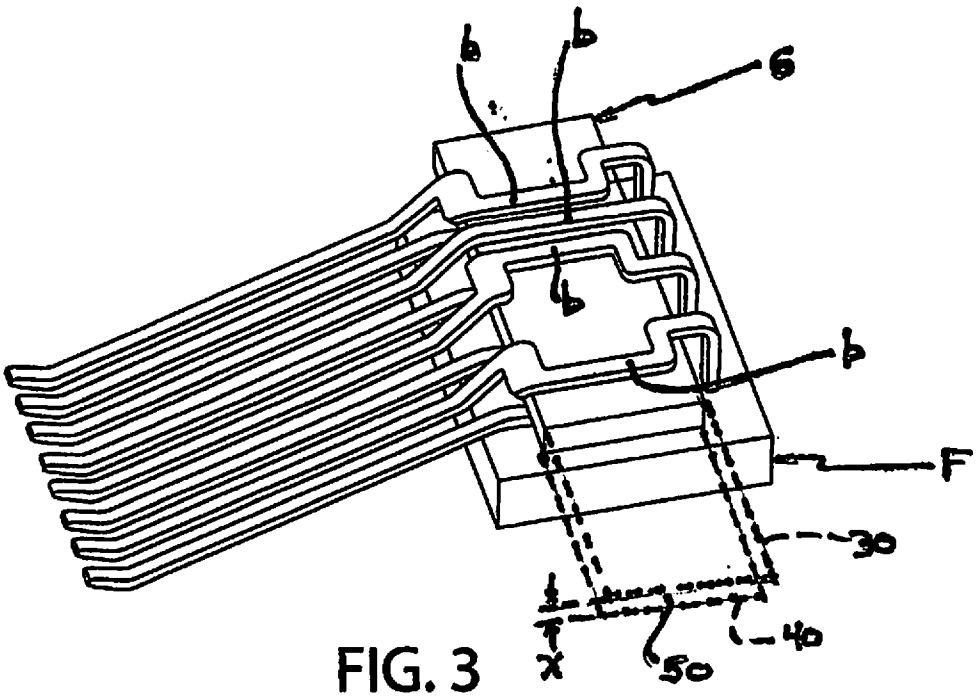
b
b
6
b
b
F
30
40
X
50

FIG. 3

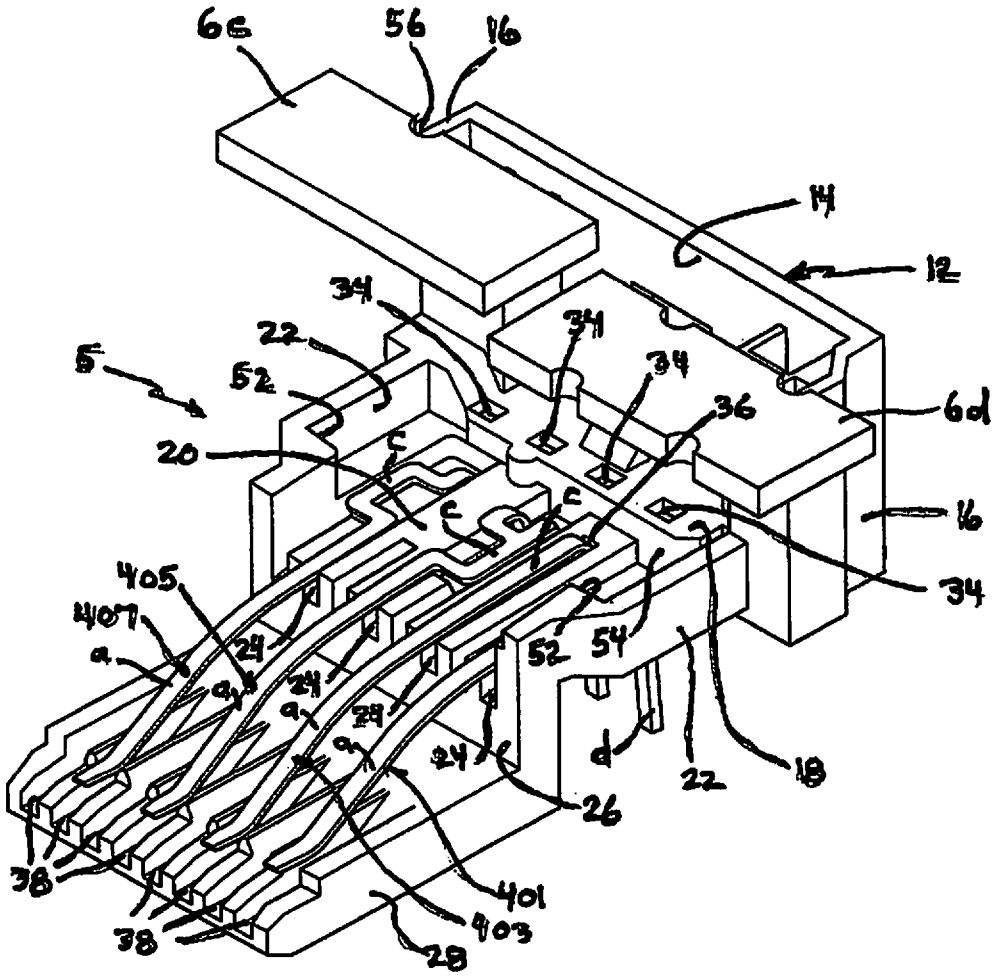
6c
56
16
14
12
34
34
34
22
5
52
36
6d
20
c
c
c
16
34
405
407
a
a
24
24
24
24
52
54
d
22
18
26
38
38
401
403
28

FIG. 4

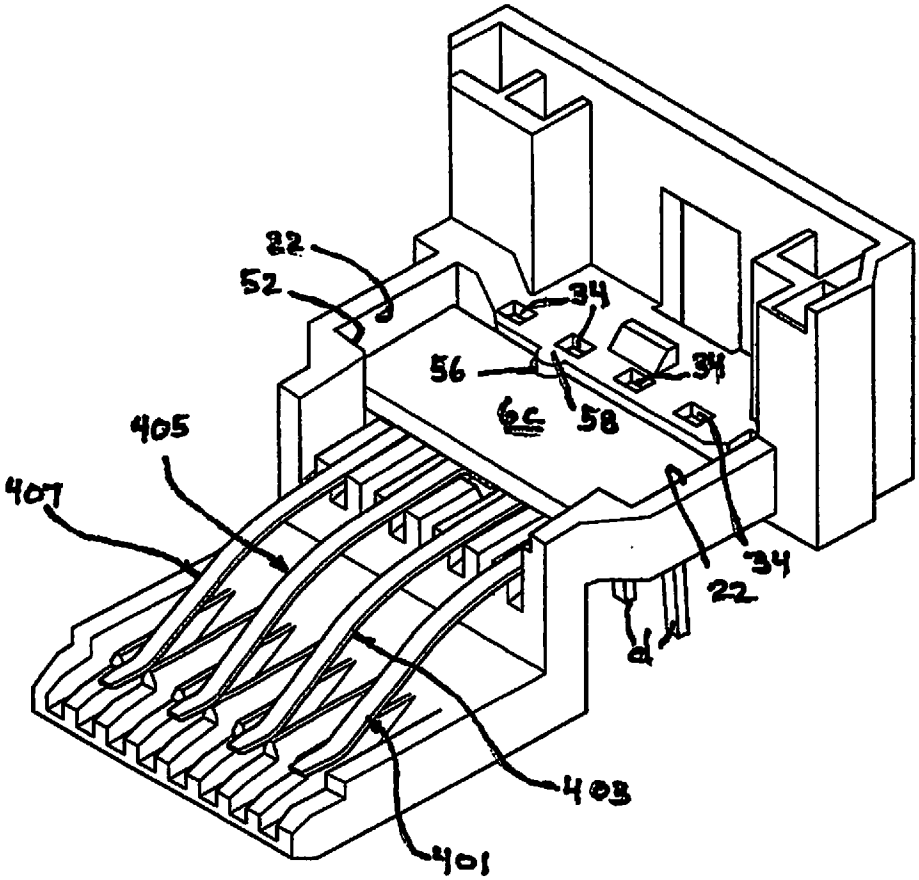

FIG. 5

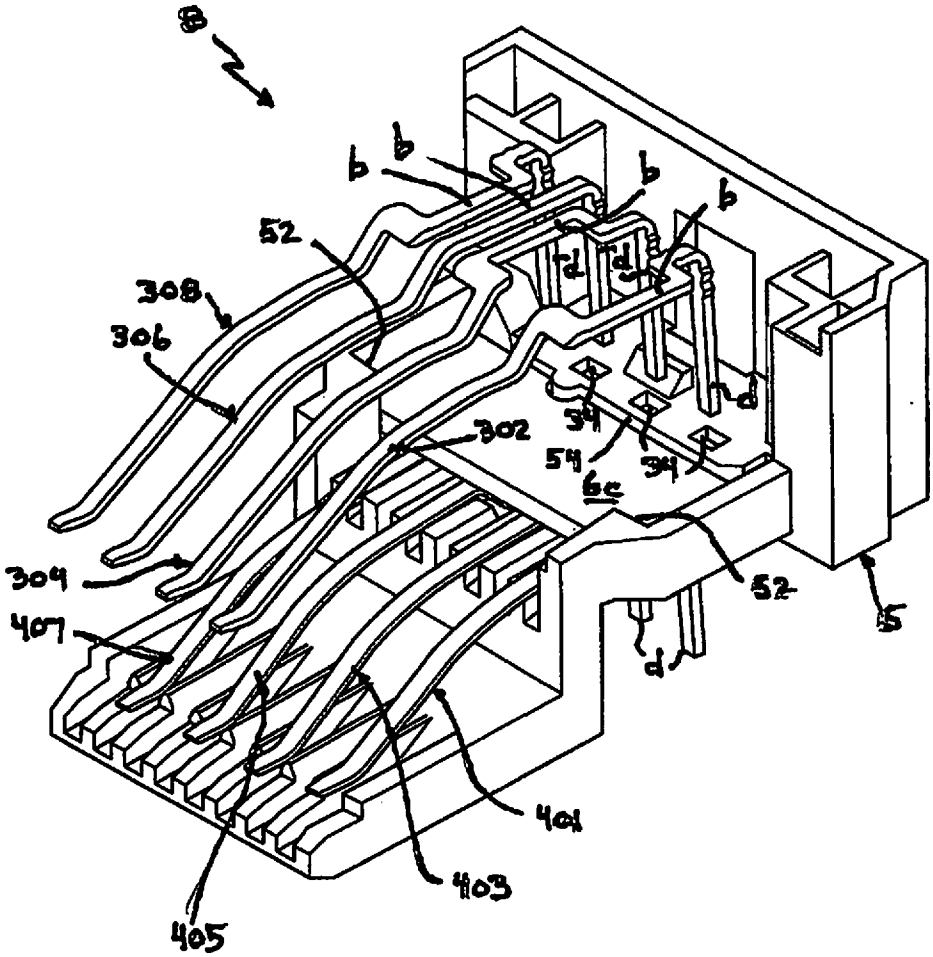

FIG. 6

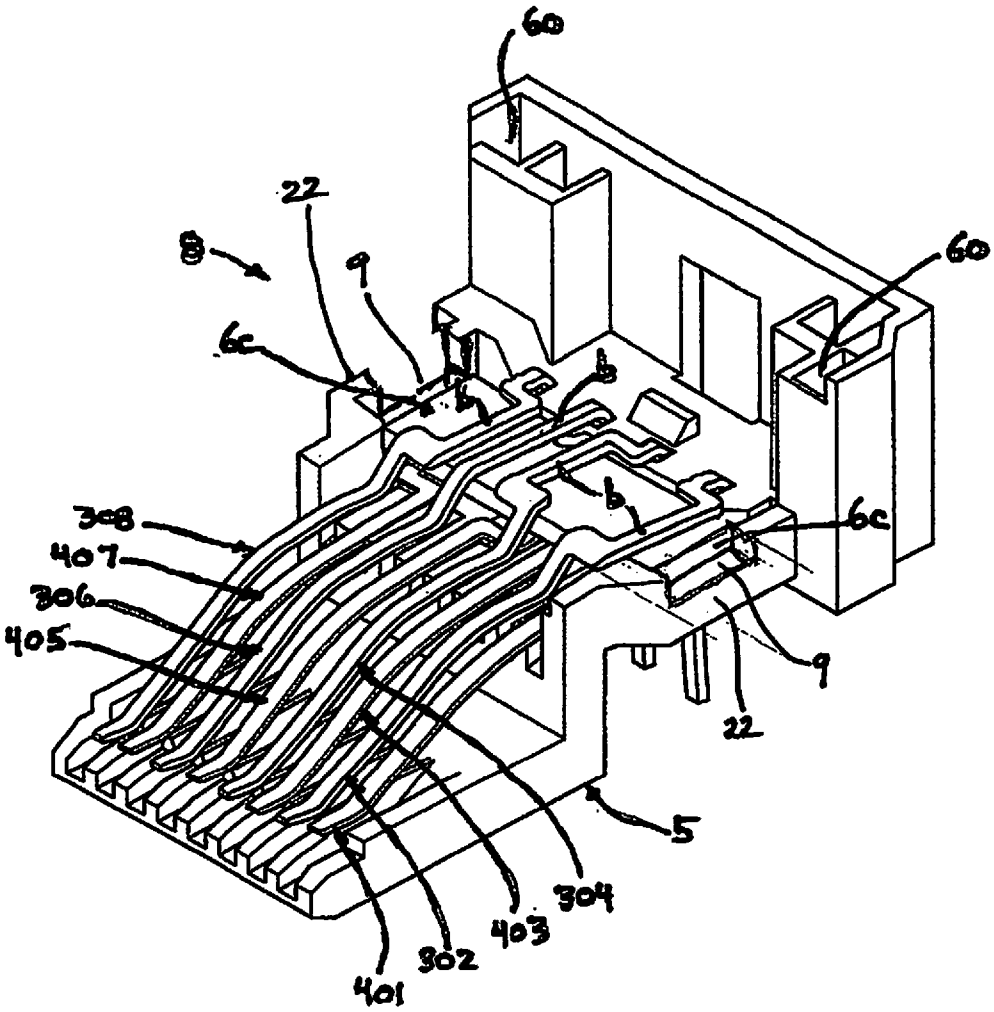

FIG. 7

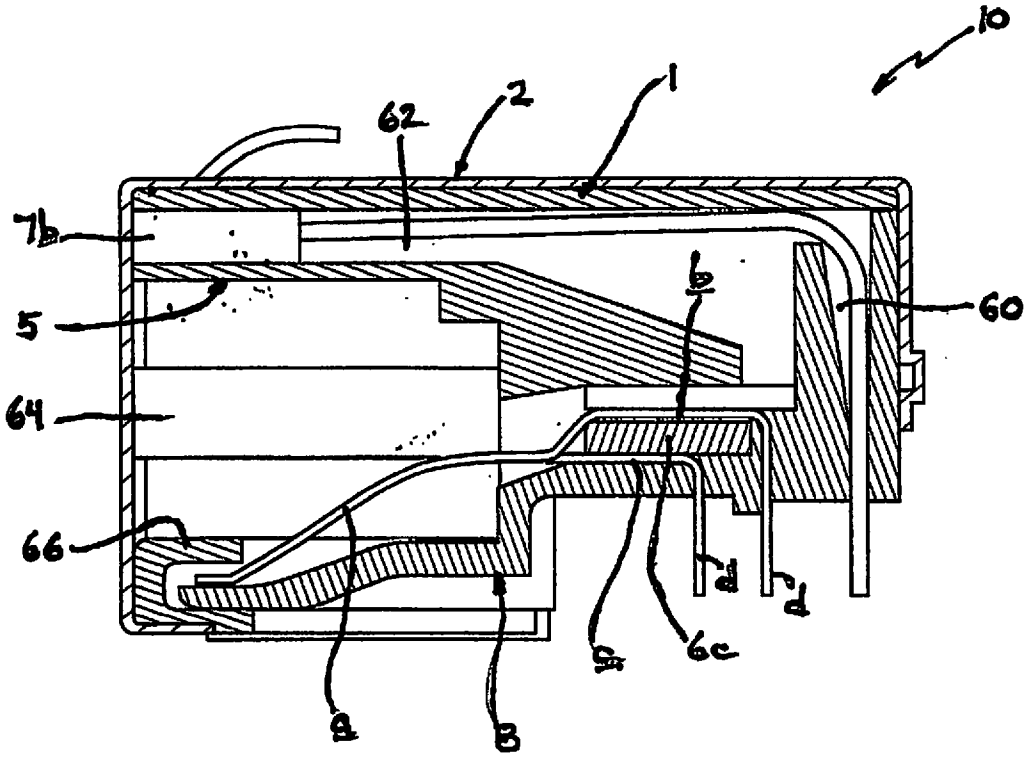

FIG. 8

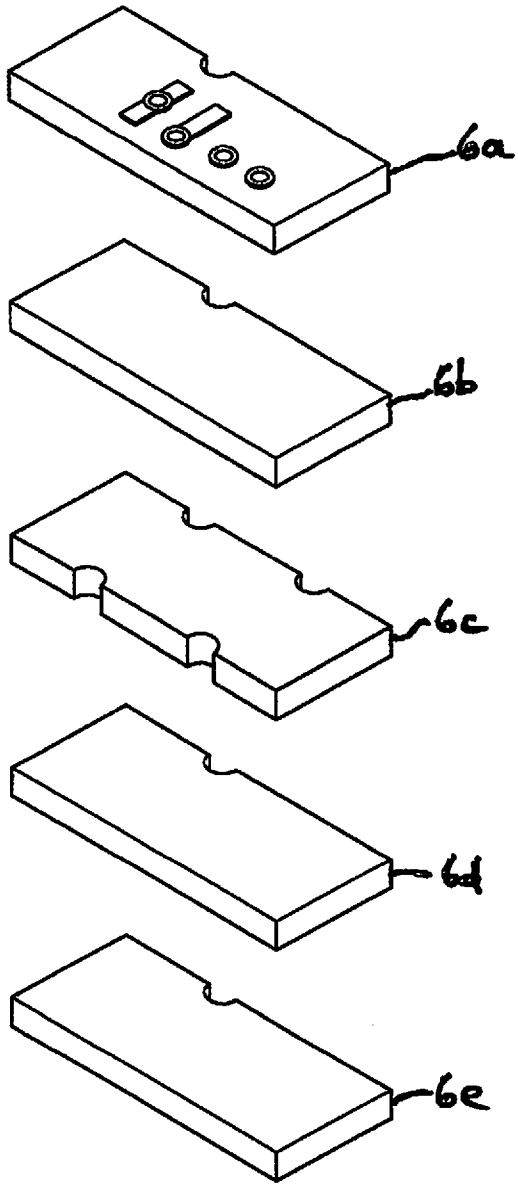

FIG. 9

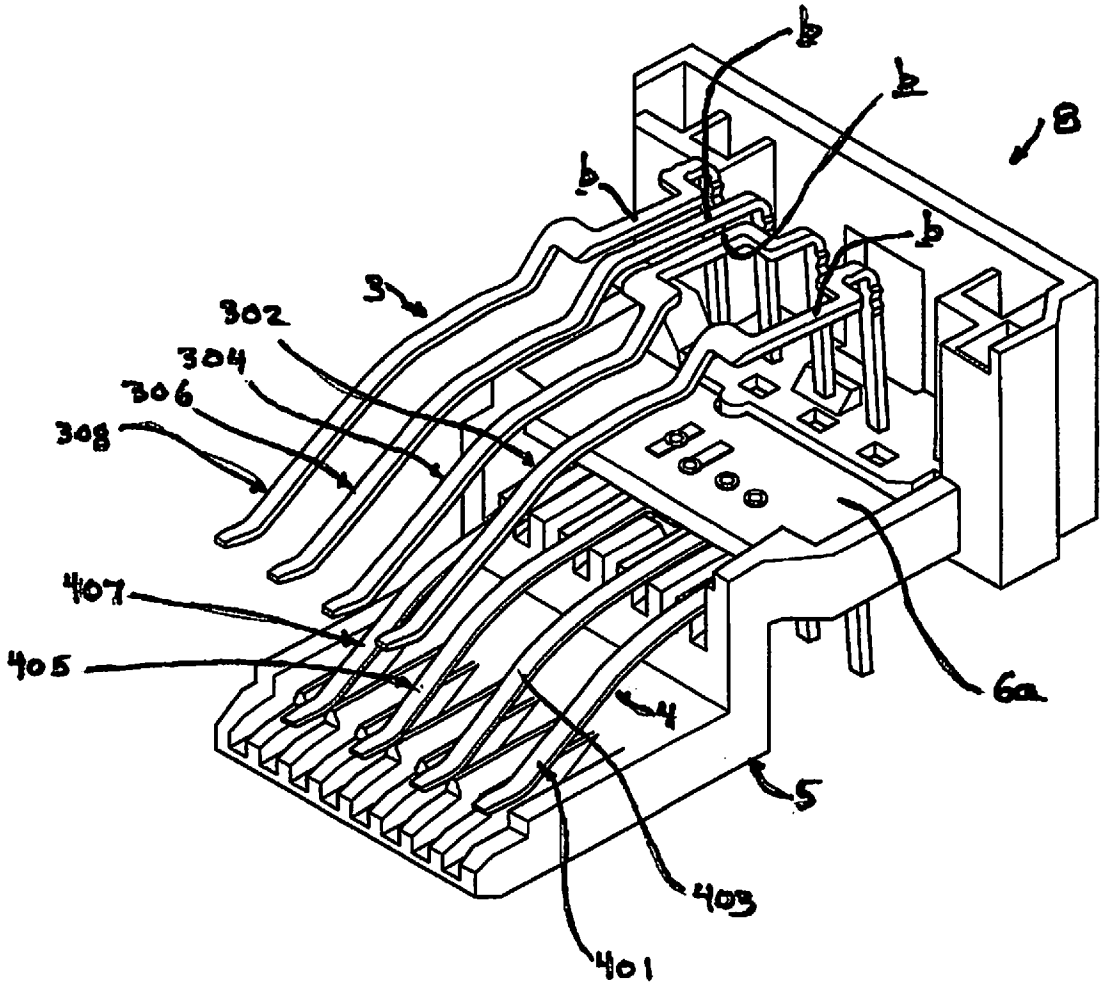

FIG. 10

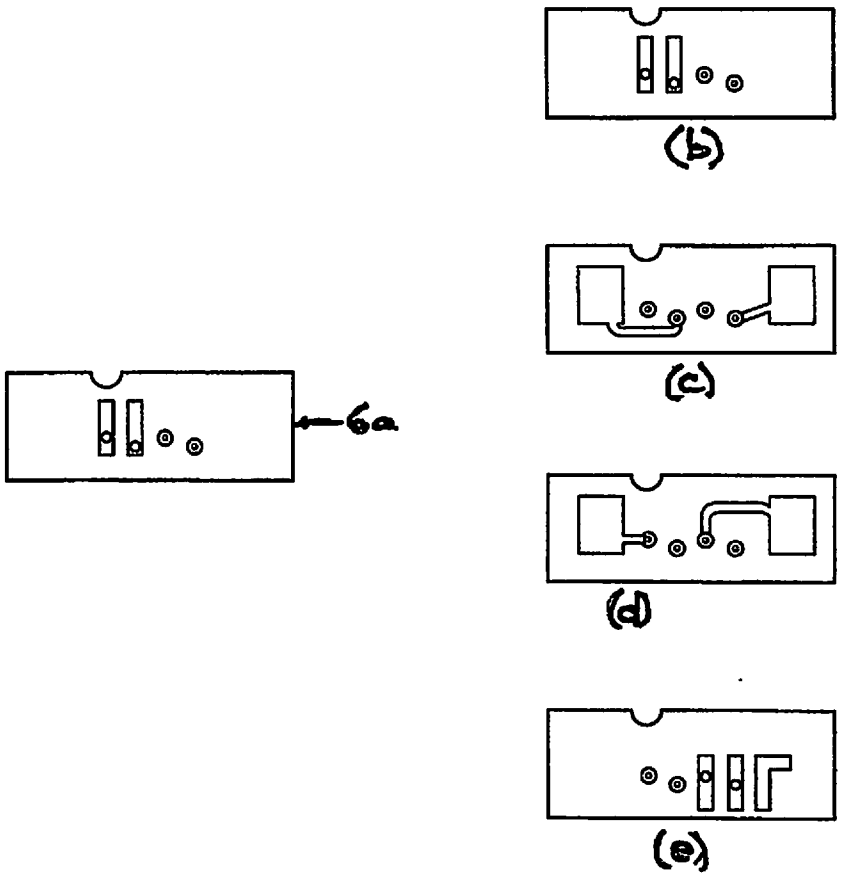

FIG. 11

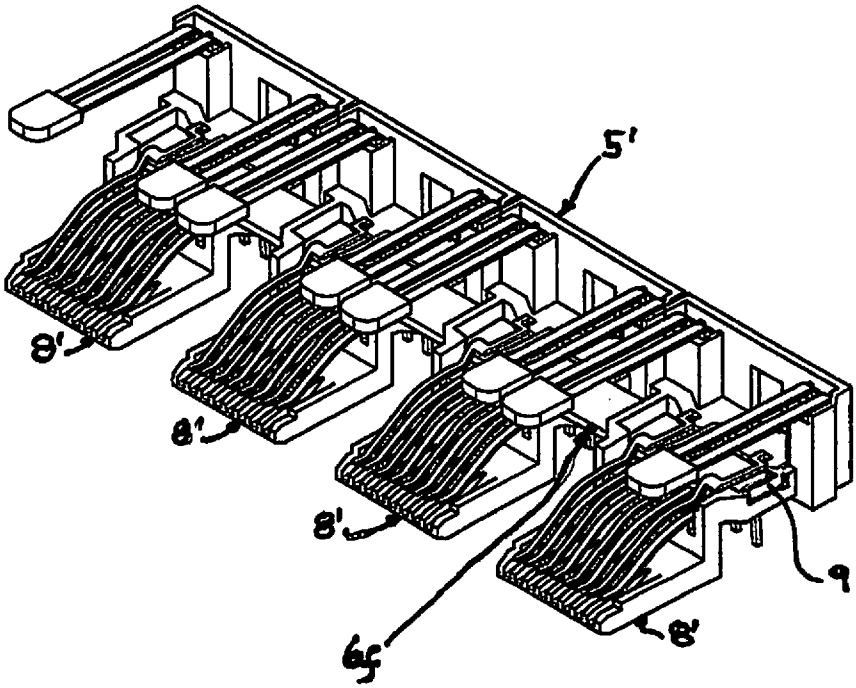

FIG. 12

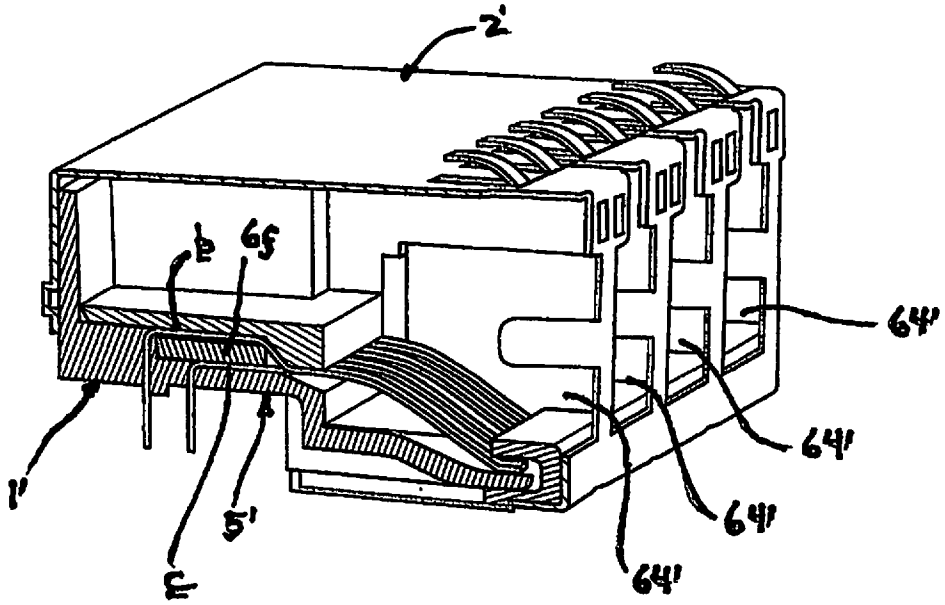

FIG. 13

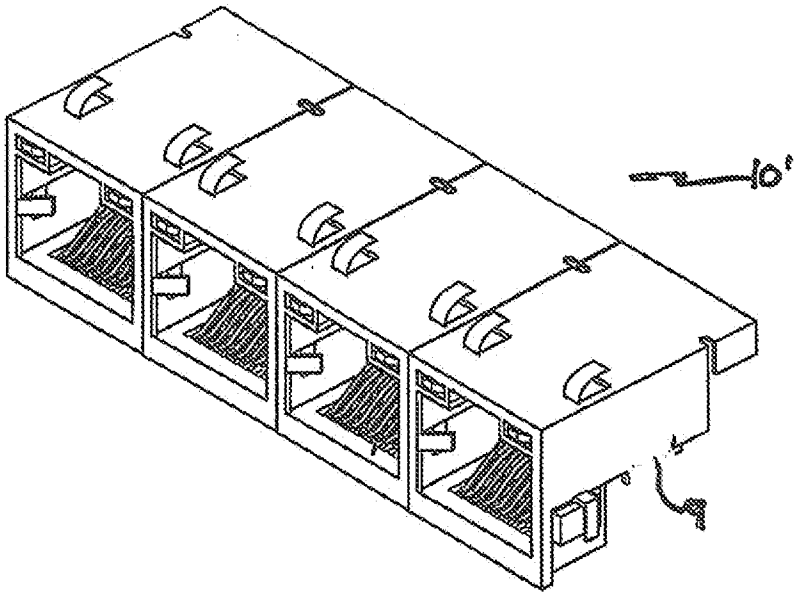

FIG. 14

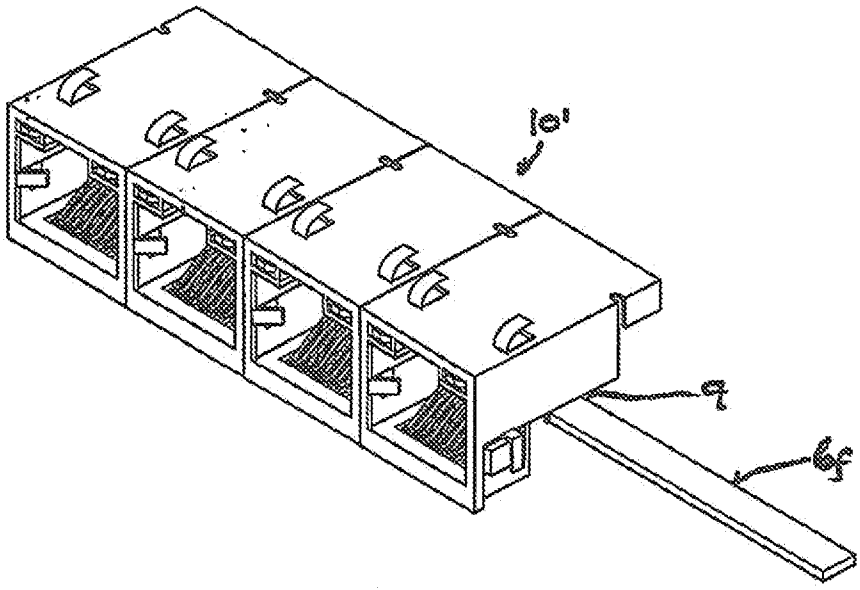

FIG. 15

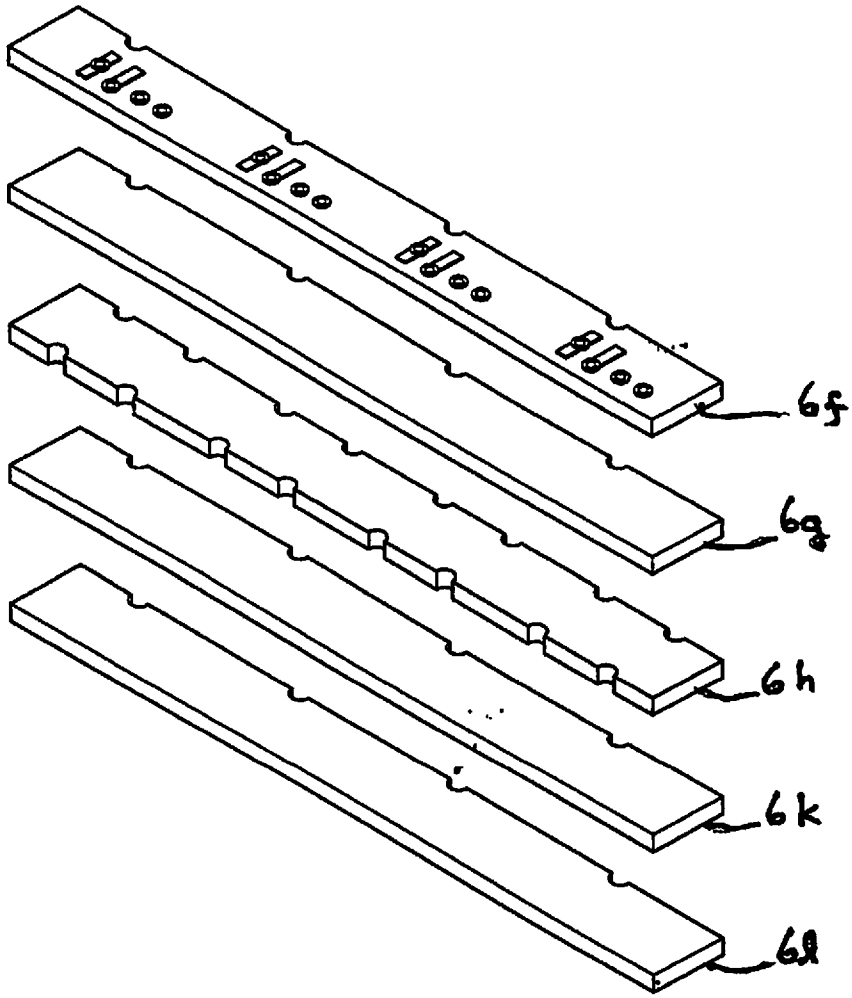

FIG. 16

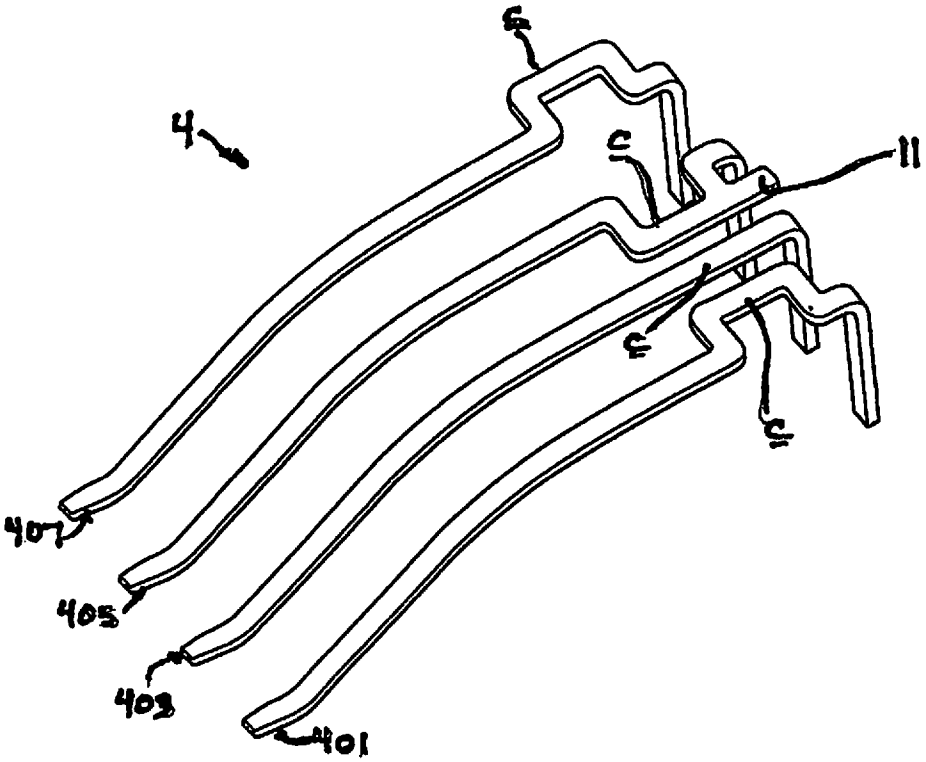

FIG. 17

Forward NEXT with insert 6a

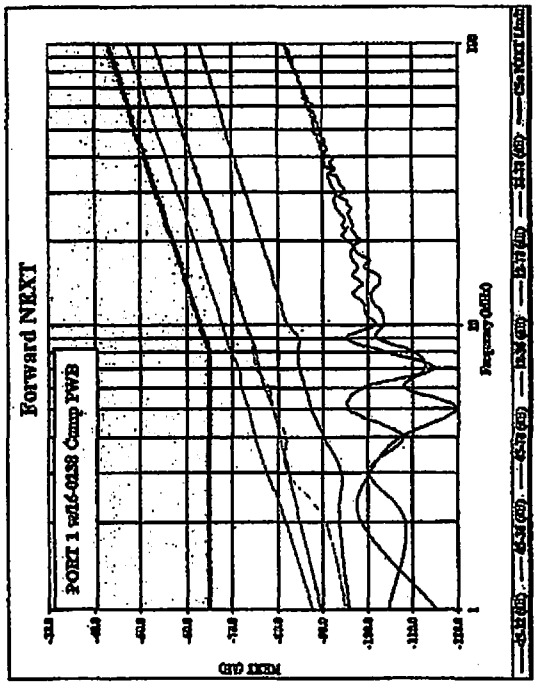

(a)

Forward NEXT with insert 6b

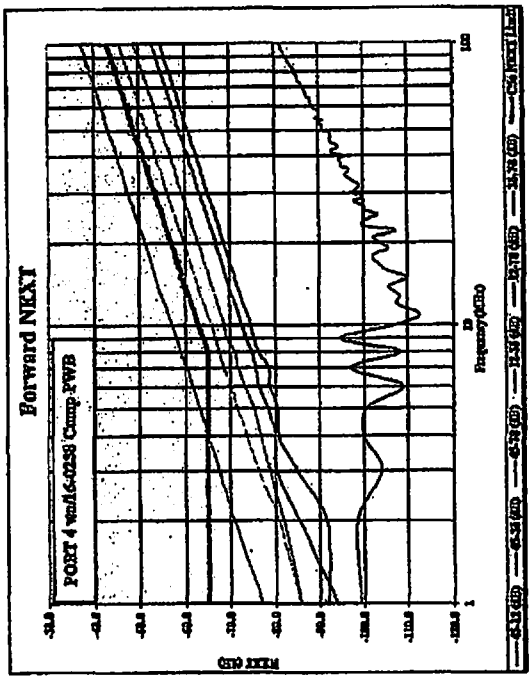

(b)

Very significant differences in the electrical response – Forward NEXT with the same connector tested with inserts 6a and 6b

Figure 18

INTERNATIONAL SEARCH REPORT

International application No.
PCT/US2015/033903

A. CLASSIFICATION OF SUBJECT MATTER
IPC(8) - H01R 13/6464 (2015.01)
CPC - H01R 13/6464 (2015.07)
According to International Patent Classification (IPC) or to both national classification and IPC

B. FIELDS SEARCHED

Minimum documentation searched (classification system followed by classification symbols)
IPC(8) - H01R 13/02, 13/10, 13/646, 13/6461, 13/6464, 13/6471, 13/66, 13/717, 24/28, 24/62 (2015.01)
USPC - 307/147; 439/489, 540.1, 541.5, 607.01, 620.11, 620.13, 676, 941

Documentation searched other than minimum documentation to the extent that such documents are included in the fields searched
CPC - H01R 13/02, 13/10, 13/646, 13/6461, 13/6464, 13/6471, 13/66, 13/717, 24/28, 24/62 (2015.07) (keyword delimited)

Electronic data base consulted during the international search (name of data base and, where practicable, search terms used)
Orbit, Google Patents, Google Scholar.
Search terms used: network, interface, connector, port, contact, finger, elongate, change, adjust, capacitance, proximity, housing, insert, gap, socket, category, ethernet, upper, lower, pin, signal, path, shield, plate, between

C. DOCUMENTS CONSIDERED TO BE RELEVANT

Category*	Citation of document, with indication, where appropriate, of the relevant passages	Relevant to claim No.
X	US 5,975,960 A (FOGG et al) 02 November 1999 (02.11.1999) entire document	1, 5, 6, 16-21, 25
Y		8-11, 24
X	US 6,964,587 B2 (COLANTUONO et al) 15 November 2005 (15.11.2005) entire document	26
Y	US 8,128,432 B2 (JAOUEN et al) 06 March 2012 (06.03.2012) entire document	8-11
Y	US 7,658,648 B2 (AEKINS) 09 February 2010 (09.02.2010) entire document	24
A	US 7,179,131 B2 (CAVENEY et al) 20 February 2007 (20.02.2007) entire document	1-26
A	US 2008/0254685 A1 (MURR et al) 16 October 2008 (16.10.2008) entire document	1-26

☐ Further documents are listed in the continuation of Box C. ☐ See patent family annex.

* Special categories of cited documents:
"A" document defining the general state of the art which is not considered to be of particular relevance
"E" earlier application or patent but published on or after the international filing date
"L" document which may throw doubts on priority claim(s) or which is cited to establish the publication date of another citation or other special reason (as specified)
"O" document referring to an oral disclosure, use, exhibition or other means
"P" document published prior to the international filing date but later than the priority date claimed
"T" later document published after the international filing date or priority date and not in conflict with the application but cited to understand the principle or theory underlying the invention
"X" document of particular relevance; the claimed invention cannot be considered novel or cannot be considered to involve an inventive step when the document is taken alone
"Y" document of particular relevance; the claimed invention cannot be considered to involve an inventive step when the document is combined with one or more other such documents, such combination being obvious to a person skilled in the art
"&" document member of the same patent family

Date of the actual completion of the international search
07 August 2015

Date of mailing of the international search report
26 AUG 2015

Name and mailing address of the ISA/
Mail Stop PCT, Attn: ISA/US, Commissioner for Patents
P.O. Box 1450, Alexandria, Virginia 22313-1450
Facsimile No. 571-273-8300

Authorized officer
Blaine Copenheaver
PCT Helpdesk: 571-272-4300
PCT OSP: 571-272-7774