Feb. 4, 1964 J. R. McCUSKEY ETAL 3,120,321

CONT. INER CONSTRUCTION

Filed Sept. 27, 1962

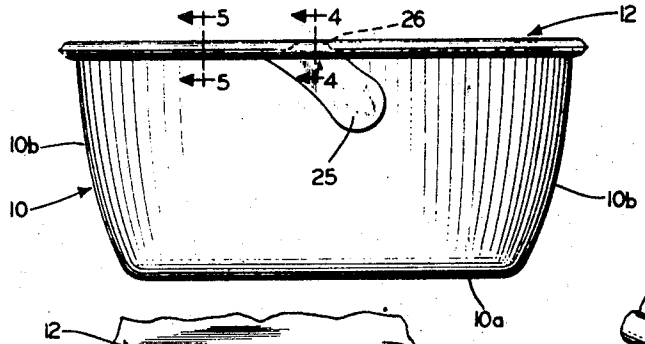

Fig. 1

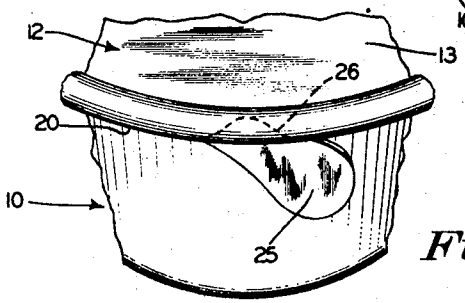

Fig. 2

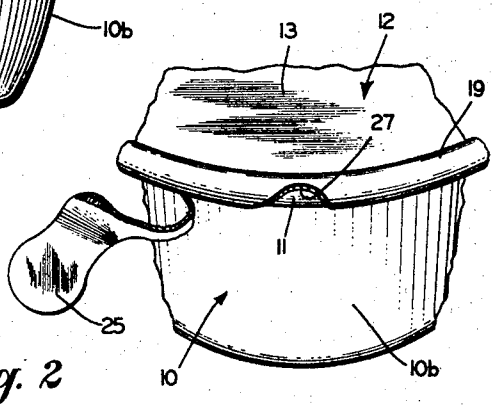

Fig. 3

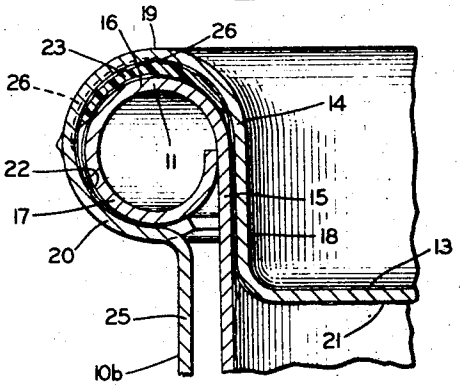

Fig. 4

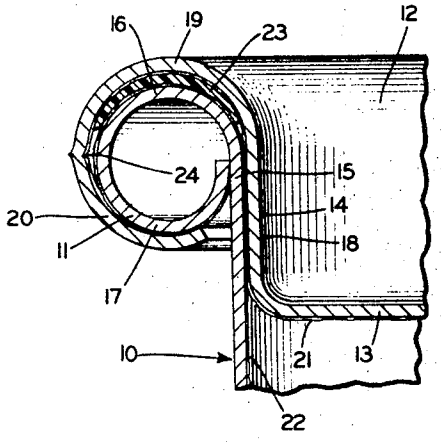

Fig. 5

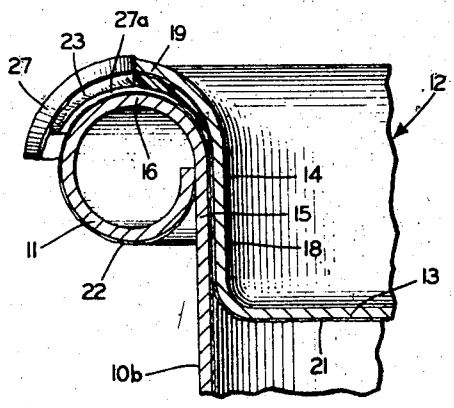

Fig. 6

INVENTORS.
James R. McCuskey,
John C. Baugh,
John E. Koenig and
George J. Henning
BY Frease, Bishop, Johns & Schick
ATTORNEYS

United States Patent Office 3,120,321 Patented Feb. 4, 1964

3,120,321
CONTAINER CONSTRUCTION

James R. McCuskey, Canton, John C. Baugh and John E. Koenig, Massillon, and George J. Henning, Canton, Ohio, assignors to The Central States Can Corporation, Massillon, Ohio, a corporation of Ohio

Filed Sept. 27, 1962, Ser. No. 226,712
9 Claims. (Cl. 220—54)

Our invention relates to improvements in container construction, and more specifically to a container having a metal closure with a tear strip for releasing the closure from a sealed condition on the container. Even more specifically, our invention relates to containers having metal tear strip closures primarily used for food packaging.

Various prior forms of containers having metal closures thereon have been developed and in many cases both the container and closures have been formed of metal. Furthermore, such prior containers have frequently been used for packaging various types of dry food products, and in recent years it has been possible, with the development of certain types of plastic coatings and special metal surface finishes, to also package food products having a fluid state.

One of the major problems in packaging food products which are fluids in metal containers having metal closures is the necessity of providing a thin, preferably plastic coating over the internal metal surfaces which is non-harmful to the particular food product and is impervious to attack by the particular food product. Certain types of these required coatings have been developed and it has, therefore, been possible to package these fluid food products in metal containers and closures formed of various common metals such as aluminum, tinplate and the like.

In the case where tear strip closures are used with metal containers for packaging various types of food products whether dry, liquid or semi-liquid, it is common practice to form the particular container with an open upper end and to form the closure with an inverted, generally U-shaped edge portion, so that when the closure is received over the end of the container, the closure edge portion can be formed to provide a seal around the edge of the container end. Further, the usual practice is to coat the inner surface of both the container end closure with a thin plastic coating and to provide the closure edge portion with a gasket-like sealing compound so that after the food product has been placed in the container, the closure may be tightly sealed thereon and the resulting sealed container will properly protect and preserve the food product therein.

Recently, it has been found desirable to package certain food products in metal containers of this type with which the actual packing and sealing of the closure on the container takes place while the food product is still in a warm state. This, of course, results in the ultimate cooling of the food product within the sealed container which in turn creates a slight vacuum within this container.

Thus, when the usual tear strip is removed from the edge of the closure freeing the closure for removal to provide access to the food product within the container, this vacuum has created difficulties in such closure removal. This is true despite the fact that the removal of the usual tear strip eliminates retaining metal engagement between the closure and container since the vacuum still creates a troublesome internal retaining force urging the closure to remain sealed over the container end.

It is, therefore, a general object of the present invention to provide a container construction which eliminates the foregoing difficulties with the prior constructions for packaging food products in a warm state.

It is a primary object of the present invention to provide a container construction in which the vacuum created within the container from packaging food products in the warm state is either completely relieved at the time the closure tear strip is removed, or at least the container and closure are of a construction that the vacuum may be readily relieved with little difficulty.

It is a further object of the present invention to provide a container construction in which the inner side of the closure may be coated with a plastic coating which readily adheres to the gasket sealing compound at the closure edge and the inner side of the container may be coated with a plastic coating which will not adhere to the gasket sealing compound on the closure, so that once the closure tear strip is removed, the closure may be relatively easily lifted from the container to relieve the vacuum within the container.

It is still a further object of the present invention to provide a container construction in which a unique tear strip is formed so that upon removal of the tear strip, the vacuum within the container is substantially completely relieved and the released closure thereby easily removable from the container.

Finally, it is an object of the present invention to provide a container construction satisfying all of the above objects in a relatively simple and efficient manner, and which may be provided at a minimum of expense.

These and other objects are accomplished by the parts, constructions, arrangements, combinations and subcombinations comprising the present invention, a preferred embodiment of which—illustrative of the best mode in which applicants have contemplated applying the principles—is set forth in the following description and illustrated in the accompanying drawings, and which is particularly and distinctly pointed out and set forth in the appended claims forming a part hereof.

In general terms the container construction comprising the present invention may be stated as including a preferably metal container having an open upper end with a preferably outwardly rolled peripheral beaded portion around this upper end. Further, the container beaded portion is preferably formed with a generally vertical inner side portion, an arcuate preferably semi-circular top portion, and an arcuate downwardly inwardly outer side portion.

Still further, the container construction includes a metal closure for the container open end which closure is formed by a central disc-like portion and a peripheral edge portion. The closure edge portion is telescoped over the container beaded portion and this closure edge portion is provided with inner, top and outer side portions positioned adjacent and substantially conforming to the inner, top and outer side portions of the container beaded portion. Also, the outer side portion of the closure edge portion is formed with a lower part tightly inwardly engaged with the outer side portion of the container beaded portion for tightly retaining the closure sealed over the container upper end and against upward removal therefrom.

Still further and more particularly according to the principles of the present invention, a thin plastic food resistant coating is positioned covering an inner surface of the closure and closure edge portion, a food resistant gasket sealing compound is formed on the inner surface of the top portion of the closure edge portion positioned over the closure plastic coating, and a thin plastic food resistant coating is formed covering an inner surface of the container and container beaded portion. All of the closure plastic coating material, the gasket sealing compound, and the container plastic coating material must be non-harmful to, free from discoloration of, and impervious to attack by the particular food products to be packaged in the container construction, and this must be

true even at higher food packing temperatures, for instance, in the order of 170° F. to 190° F.

Further, the closure plastic coating material is preferably a thin baker coating of thermosetting plastic material and must have good adhesion or adherence with both the inner surface of the closure and with the gasket sealing compound. The gasket sealing compound is preferably a baked thermoplastic compound or plastisol and must have good adhesion or adherence with the closure plastic coating material, as well as remaining somewhat resilient or semipliable after any baking and after subjection to the higher food packing temperatures. The container plastic coating material is preferably a thin baked coating of thermosetting plastic material and must have good adhesion or adherence with the inner surface of the container, but must be free from adhesion or adherence to the gasket sealing compound after any baking and after subjection to the higher food packing temperatures.

Finally, a tear strip score line is formed on the outer side portion of the closure edge portion intermediate the lower part of said outer side portion and the top portion of the closure edge portion. This score line may be formed in this location entirely around the container and closure edge portions, but also according to the principles of the present invention, at preferably the beginning part of the tear strip formed by this score line, the score line may be formed upwardly preferably at least midway into the upper portion of the closure edge portion, and then back downwardly to the normal location of the score line, to provide a somewhat arcuate or semi-circular modified score line portion at this beginning part.

Thus, upon removal of the tear strip formed by the tear strip score line on the closure edge portion, the lack of adherence between the closure gasket sealing compound and the container coating will aid in removal of the closure from the container despite a vacuum in the container created by sealing at higher food packing temperatures and subsequent cooling. Furthermore, where the modified score line portion is provided, this extension of the score line upwardly into the upper portion of the closure edge portion will also aid in removal of the closure from the container by providing an easier relief of this vacuum within the container.

By way of example, an embodiment of the container construction comprising the present invention is illustrated in the accompanying drawings forming a part hereof, wherein like numerals indicate similar parts throughout the several views, and in which:

FIG. 1 is a side elevation of a container incorporating both the coating and modified tear strip principles of the present invention;

FIG. 2, an enlarged fragmentary top-side perspective view showing the closure tear strip tab with the initial portion of the tear strip score line indicated in broken lines, according to the principles of the present invention;

FIG. 3, a view similar to FIG. 2, but with the closure tear strip partially removed;

FIG. 4, an enlarged fragmentary sectional view, part in elevation, looking in the direction of the arrows 4—4 in FIG. 1;

FIG. 5, an enlarged fragmentary sectional view, part in elevation, looking in the direction of the arrows 5—5 in FIG. 1;

FIG. 6, a view similar to FIG. 4, but with the closure tear strip removed.

As shown in the drawings, the container construction of the present invention includes an upwardly opening container, generally indicated at **10**, having bottom and side walls **10***a* and **10***b*, and having preferably an outwardly rolled beaded upper edge **11**. Further, a closure is provided for the container **10** generally indicated at **12**, with this closure being formed by a central disc-like portion **13** and a peripheral edge portion **14**. Both the container **10** and closure **12** are preferably formed of metal, such as aluminum.

As shown, the upper edge **11** of the upper open end of the container **10** is preferably outwardly flanged or beaded generally circular in cross-section presenting an inner generally vertically extending portion **15** formed by the side walls **10***a*, an arcuate semicircular upper out-turned sealing surface or portion **16** and an arcuate downwardly inwardly turned outer portion **17** forming a shoulder spaced below portion **16**. Further, the closure edge portion **14** is preferably formed substantially matching the container edge **11** having a continuous inner generally vertically extending upturned portion **18**, a continuous arcuate semi-circular upper out-turned portion **19**, and a continuous arcuate downwardly or downturned and inwardly or inturned extending outer portion **20**.

Thus, the closure **12** may be received over the open upper end of container **10** with the closure edge portion **14** telescoped over and engaging the container edge **11**. When positioned in this manner, the closure inner portion **18** is inwardly closely adjacent the container inner portion **15**, the closure upper portion **19** closely overlies the container upper portion **16**, and the closure outer portion **20** is rolled or otherwise formed downwardly and inwardly closely beneath the container outer portion **17**, so that the closure **12** is tightly retained on the container **10** against upward removal.

For the protection of the hot packed food products to be packaged in the container **10**, the inner food-contacting surface of the closure **12**, including the closure edge portion **14**, is coated with a thin coating of preferably thermosetting plastic material **21** bonded thereon, and the inner food-contacting surface of the container **10**, including the continuation of this surface over the rolled container edge **11**, is coated with a thin coating of a preferably thermosetting plastic material **22** bonded thereon, both of which will be discussed hereafter in detail. Further, thermoplastic gasket sealing compound or material **23** is positioned over the closure plastic coating material within the upper portion **19** of the closure edge portion **14** for ultimate sealing against the upper portion **16** of the container edge **11** and against the plastic coating material **22** thereon. This gasket sealing material **23** will likewise be discussed later more in detail.

Prior to or after the application of the plastic coating material **21** on the inner surface of the closure **12**, but prior to application of the gasket sealing material **23**, a tear strip score line **24** is preferably internally formed on the downturned-inturned part of the closure edge portion **14**. The major portion of this tear strip score line **24** round the circumference of the closure edge portion **14** is substantially midway of the finished formed height of the closure edge portion, or about at the point of joinder between the upper outturned portion **19** and downturned-inturned outer portion **20** of this closure edge portion, which is the usual location.

According to the principles of the present invention however, preferably at the beginning part of the tear strip which is at the tear strip tab **25**, this score line **24** is formed from tab **25** over the closure outer portion **20** and arcuately upwardly preferably at least midway into the upper outturned portion **19**, and then back downwardly of the upper portion **19** to the normal or usual location of the score line, which, as before described, is about at the line of joinder between the upper and outer portions **19** and **20**. This provides a somewhat arcuate modified score line portion **26**, preferably approximately semi-circular in overall configuration, as indicated by broken lines in FIGS. 1 and 2 and shown in FIG. 4.

Thus, when the tear strip is removed by grasping the tab **25** and pulling on the same, the initial tearing will occur along this modified score line portion **26** upwardly through the closure outer portion **20** at least substantially midway into the upper portion **19** as well as the gasket sealing material **23**, and then downwardly to about the line of joinder between these upper and outer portions **19** and **20**, where the tear line continues around

the remainder of the circumference of the closure edge portion **14**. This thereby results in an initial somewhat semi-circular or generally arcuate relieved edge portion **27** on the closure **12**, as shown in FIGS. 3 and 6. Further, this also results in a slight upward deformation of the closure edge portion **14** inward the remainder of the lateral extent of the closure upper portion **19** and into the closure inner portion **18** at the location of this relieved edge portion **27**, as indicated by the separation space shown at **27***a* in FIG. 6 between the gasket sealing material **23** as well as the closure upper portion **19** and the container upper portion **16**.

Further, according to the principles of the present invention, the plastic coating material **21** on the inner surface of closure **12** is a thin baked coating of thermosetting plastic material which must be non-harmful, will not discolor, and impervious to attack by the particular foods to be packaged in the container construction even at higher food packing temperatures, for instance, between approximately 170° F. and 190° F. Furthermore, this plastic coating material **21** must have good adhesion with the gasket sealing material **23** and be free of adhesion with the plastic coating material **22** on the inner surface of the container **10**.

An example of this plastic coating material **21** for the inner surface of the closure **12** is a thermosetting plastic coating material which is a blend or vinyl and phenolic resins, and which, as applied, has ketone and hydrocarbon solvents. After application in a coating of about .0001" to .0002" thickness, it is baked approximately ten minutes at 350° F. to completely drive-off these solvents. This results in a thin smooth clear plastic coating which has good adherence with the poly vinyl chloride plastisol gasket sealing material making up the gasket sealing material **23** to be described below, is free of adherence with the container plastic coating material **22** to be described below, and also has good thermal stability. Further, this plastic coating material is commercially known as Code No. S–6895 of the Stoner-Mudge Division of Martin Marietta Corporation.

Another example of the plastic coating material **21** for the inner surface of the closure **12** is a thermosetting plastic coating material which is a blend of vinyl and amino resins. This also is applied in a coating of about .0001" to .0002" thickness and has ketone and hydrocarbon solvents which are completely driven-off during baking for approximately ten minutes at 300° F. Further, the final coating is a thin smooth clear coating having good adherence to the poly vinyl chloride plastisol gasket sealing material, is free of adherence with the container plastic coating material **22**, and has good thermostability. This plastic coating material is commercially known as Code No. S–6388 of the Stone-Mudge Division of Martin Marietta Corporation.

Further, according to the principles of the present invention, the gasket sealing material **23** may be a baked thermoplastic compound which must remain somewhat resilient or semi-plastic at room temperatures and must have good adherence to the plastic coating material **21** for the inner surface of the closure **12**. Further, this gasket sealing material **23** must be non-harmful, will not discolor, and be impervious to attack by the particular foods to be packaged.

As an example of this gasket sealing material **23** is a thermoplastic compound or plastisol formed of poly vinyl chloride with certain plasticizers added, and which is applied in a thickness of about .011" to .012" and then baked approximately 55 to 60 seconds at 380° F. to 390° F. This resulting gasket sealing material has the required good adherence to the plastic coating materials **21** of the closure **12**, and remains somewhat resilient or semi-pliable after baking and after subjection to the food packaging temperatures.

The plastic coating material **22** on the inner surface of the container **10** may be a thermosetting plastic coating material which after baking must not adhere to the gasket sealing material **23**, and furthermore, must not adhere to this gasket sealing material under food packing temperatures of approximately 170° F. to 190° F. Otherwise, this plastic coating material **22** must have the same qualities as the plastic coating material **21**, that is, it must be non-harmful to, will not discolor, and be impervious to attack by the particular foods to be packaged.

An example of this plastic coating material **22** for the inner surface of the container **10** is a thermosetting plastic coating material which is a blend of vinyl resins and which, after application of about .0001" to .0002" thickness, is baked approximately ten minutes at 280° F. to 300° F. to drive-off the solvents. This results in a plastic coating material **22** which will not adhere to the previously described poly vinyl chloride plastisol gasket sealing material or the plastic coating materials **21** even under food packing temperatures of approximately 170° F. to 190° F. and is a thin smooth clear coating having good thermostability. Such a plastic coating material is commercially known as Code No. S–988–F of Stone-Mudge Division of Martin Marietta Corporation.

The previously described closure and container plastic coating materials **21** and **22** in final form result in thin smooth clear coatings on the inner surfaces of the closure and container, and the fact that these coating materials are free of adherence one to the other in final form results in the fact that, at any point where these closure and container inner surfaces are in contact, there will be no seizing between these coatings or surfaces. For instance, in the container construction previously described, the container inner portion **15** and the closure inner portion **18** abut and, as a matter of fact, may be provided with a slight pressure fit without causing difficulties in the repeated removal and reinsertion of the closure **12** within the container **10**, due to the characteristics of these coatings.

Furthermore, due to the smoothness and thinness of these plastic coatings on the inner surfaces of the container and closure **10** and **12**, these coatings actually provide a lubrication between the surfaces permitting removal and insertion of the closure **12** from and into the container **10** despite a slight pressure fit. This lubrication would not be present if merely bare metal surfaces were provided.

Also, the lack of adherence between these coatings, the final characteristics thereof, and the fact that the container and closure surfaces are separated by these coatings, makes it impossible for such surfaces alone to seal a vacuum within the container. Rather, the sealing of such vacuum results solely from the characteristics of the gasket sealing material **23** described above, and the fact that this gasket sealing material is forced downwardly with pressure against the plastic coating material **22** on the inner surface of the container **10** when the closure **12** is secured over the container **10** after the food products have been placed within the container **10** and prior to the previously described tear strip being removed from the closure **12** along the score line modified portion **26** and score line **24**.

It should be understood that the foregoing examples provide a combination of plastic coating materials and gasket sealing material which will provide the desired results of the present invention. Other combinations of plastic coating materials and gasket sealing materials could be used to provide substantially the same results and it is not intended to limit the principles of the present invention to the exact examples given.

Further, the examples of plastic coating materials for the container **10** and closure **12** set forth above are recommended for use where the container and closure are formed of aluminum or tinplate. Aluminum is preferred at least for the closure **12** in view of the ease of removing the tear strip along the score line **24**, but other ma-

terials could be used for this container 10 and closure 12 with appropriate plastic coating materials and gasket sealing materials satisfying the foregoing enumerated requirements according to the principles of the present invention.

Thus, in use of the container construction of the present invention, after formation of the container 10 and closure 12, and the application of the plastic coating material 21 and gasket sealing material 23 on the closure 12 and the plastic coating material 22 on the container 10, and prior to assembly of the closure on the container, the container is appropriately filled with the warm food product to be packaged which will be at a temperature in the order of 170° F. to 190° F. Also at this point, the outer portion 20 of the closure edge portion 14 has not been formed inwardly so that this outer portion will extend approximately straight downwardly from the upper portion 19, although the tear strip score line 24 including the modified score line portion 26 has been previously formed.

Thereafter, the closure 12 is positioned on the container 10 with the closure edge portion 14 telescoping the container edge 11. Next, the outer portion 20 of the closure edge portion 14 is rolled or otherwise formed tightly beneath the outer portion 17 on the container beaded edge 11. This forces the gasket sealing material 23 to seal tightly downwardly against the upper portion 16 of the container 10 and subsequent cooling of the food product being packaged will create a vacuum within the container 10 which will be sealed within the container by this gasket sealing material.

When it is desired to remove the closure 12 from the container 10, the tear strip tab 25 is grasped and the closure edge portion 14 is torn first along the modified score line portion 26 and then along the remainder of the score line 24 throughout the circumference of the closure 12. During removal of this modified score line portion 26, the relieved edge portion 27 is formed and the tearing of the metal along this modified score line portion 26 will also slightly bend up the metal in substantially the remaining part of the upper portion 19 of the closure edge portion 14 at this location.

The important point is that the modified score line portion 26 in combination with the bending up of the metal in the closure edge portion 14 at this location will break the air-tight seal between the gasket sealing material 23 and the upper portion 16 of the container 10 to relieve the vacuum created and trapped within the container. As before stated, in the particular embodiment of the present invention shown, even though the inner portions 15 and 18 of the container 10 and closure 12 might be in pressure abutment, the plastic coating materials on the inner surfaces of these members will not provide a seal sufficient to retain a vacuum within the container so that as soon as the seal at the gasket sealing material 23 is broken, the vacuum will be relieved.

Thus, in the particular embodiment of the present invention shown, when the closure edge portion 14 is torn along the modified score line portion 26, this removal of metal and bending up of metal will raise the gasket sealing material 23 at this location upwardly away from the upper portion 16 of the container 10, relieving the vacuum within the container by forming the separation space shown at 27*a*. For this reason, after complete removal of the tear strip along the score line 24, as shown in FIG. 6, the closure 12 may be easily removed from the container 10.

Furthermore, whether or not this vacuum is relieved by the provision of this modified score line portion 26, the removal of the closure 12 after the tear strip has been removed will be greatly aided by the fact that the plastic coating material 22 on the inner surface of the container 10 will not adhere to the gasket sealing material 23 within the closure edge portion 14 nor the plastic coating material 21 on the inner surface of the closure 12. Also, under certain conditions, either the modified tear strip score line 24 including the score line portion 26 or the particular combination of plastic coating materials and gasket sealing material having the required characteristics described may be used separately for aiding in relieving this vacuum situation.

Finally, the extent to which the score line portion 26 of score line 24 extends over the closure edge portion 14 will be dependent on the metal from which the closure 12 is formed and the particular configuration of this closure. It is thought, however, that it is necessary to provide this score line portion 26 extending inwardly at least to about the midpoint of the upper portion 19 of the closure edge portion 14 to penetrate inwardly to at least about the midpoint of the gasket sealing material 23, which would also be about the midpoint of the upper portion 16 on the container beaded edge 11. The important thing is that this score line portion 26 must be sufficient that the gasket sealing material 23 is either removed slightly upwardly or completely removed at this location to break the air-tight seal between container 10 and closure 12 for relief of the vacuum within the container.

The term "protective coating" as used herein and in the claims in the description of the coatings bonded to the inner food-contacting surfaces of the container and closure is intended to mean that these coatings are non-harmful to, will not discolor, and are impervious to attack by the food being packed in the container construction, and this is true even at the higher hot food packing temperatures. Furthermore, these protective coatings are non-harmful to, and impervious to attack by the metals forming the closure container construction even at these higher hot food packing temperatures. Thus, these protective coatings will protect the food against attack by the metal of the container construction and will protect the container construction metal against attack by the food being packed therein.

In the foregoing description, certain terms have been used for brevity, clearness and understanding but no unnecessary limitations are to be implied therefrom, because such words are used for descriptive purposes herein and are intended to be broadly construed.

Moreover, the embodiment of the improved construction illustrated and described herein is by way of example and the scope of the present invention is not limited to the exact details of construction shown.

Having now described the invention, the construction, operation and use of the preferred embodiment thereof, and the advantageous new and useful results obtained thereby, the new and useful construction and reasonable mechanical equivalents thereof obvious to those skilled in the art are set forth in the appended claims.

We claim:

1. In metal container construction for hot-packed foods of the type in which a metal container having bottom and side walls is provided with flange means projecting continuously outwardly of the side walls at the upper open end of the side walls, in which said projecting flange means has a continuous upper sealing surface and a continuous shoulder spaced below said upper sealing surface, in which a metal closure is provided for the container having a central closure wall terminating at its extremities in continuous outturned and then downturned-inturned flange portions, in which sealing gasket means is provided on the outturned closure flange portion between said outturned flange portion and said upper surface of the container flange means; in which said closure flange portions are engaged over, around and beneath said container flange means, in which the downturned-inturned closure flange portion engages the container flange means shoulder to hold the closure sealed to the container with the gasket means compressed between the upper surface of the container flange means and an adjacent surface of the outturned closure flange portion; the improvement

which comprises a continuous tear strip score line formed in the downturned-inturned closure flange portion, a protective plastic coating bonded to the inner food-contacting surfaces of the container bottom and side walls and to the upper surface of the container flange means, a different protective plastic coating bonded to the inner food-contacting surface of the central closure wall and to the inner surfaces of said flange portions, the sealing gasket means being formed of a compound characterized by being food resistant semi-pliable, adherent to the closure plastic coating, and non-adherent to the container plastic coating, and being located adhering to the plastic coated surface of the outturned closure flange portion.

2. Container construction as defined in claim 1 in which at least a major portion of the tear strip score line is formed in the downturned-inturned closure flange portion substantially at the joining of said downturned-inturned flange portion to the outturned closure flange portion.

3. Container construction as defined in claim 1 in which a modified tear strip score line portion extends from the tear strip score line in the downturned-inturned closure flange portion upwardly and inwardly into the outturned closure flange portion and then outwardly and downwardly to said tear strip score line.

4. Container construction as defined in claim 1 in which the central closure wall includes an upturned flange portion to which the outturned closure flange portion is inwardly connected; in which the upturned closure flange portion abuts the side container walls; and in which the different plastic coatings bonded to the container and closure are characterized by being non-adherent to each other.

5. Container construction as defined in claim 1 in which the central closure wall includes an upturned flange portion to which the outturned closure flange portion is inwardly connected; in which the upturned closure flange portion abuts the side container walls; in which the different plastic coatings bonded to the container and closure are characterized by being non-adherent to each other; and in which a modified tear strip score line portion extends from the tear strip score line in the downturned-inturned closure flange portion arcuately upwardly and inwardly at least substantially midway into the outturned closure flange portion and then arcuately outwardly and downwardly to said tear strip score line.

6. Container construction as defined in claim 1 in which the protective plastic container coating includes a blend of vinyl resins; in which the protective plastic closure coating includes a vinyl plastic and a resin selected from the group consisting of phenolic and amino resins; in which the sealing gasket compound includes poly vinyl chloride; and in which the coating and sealing gasket compound are baked onto the respective closure and container surfaces.

7. In container construction for hot packed foods of the type in which a container having bottom and side walls is provided with flange means projecting continuously outwardly of the side walls at the upper open end of the side walls, in which said projecting flange means has a continuous upper sealing surface and a continuous shoulder spaced below said upper sealing surface, in which a metal closure is provided for the container having a central closure wall terminating at its extremities in continuous outturned and then downturned-inturned flange portions, in which said closure flange portions are engaged over, around and beneath said container flange portions, in which the downturned-inturned closure flange portion engages the container flange means shoulder to hold the closure sealed to the container sealing between the upper surface of the container flange means and adjacent surface of the outturned closure flange portion; the improvement which comprises a continuous tear strip score line formed in the downturned part of the downturned-inturned closure flange portion and downwardly of the outturned closure flange portion, and a modified tear strip score line portion formed as an integral section and continuation of the tear strip score line extending from the tear strip score line in the downturned-inturned closure flange portion arcuately upwardly and inwardly at least midway into the outturned closure flange portion and then arcuately back outwardly and downwardly to said tear strip score line.

8. Container construction as defined in claim 7 in which the central closure wall includes an upturned flange portion to which the outturned closure flange portion is inwardly connected; and in which the upturned closure flange portion abuts the side container walls.

9. In metal container construction for hot-packed foods of the type in which a metal container having bottom and side walls is provided with flange means projecting continuously outwardly of the side walls at the upper open end of the side walls, in which said projecting flange means has a continuous upper sealing surface and a continuous shoulder spaced below said upper sealing surface, in which a metal closure is provided for the container having a central closure wall terminating at its extremities in continuous outturned and then downturned-inturned flange portions, in which said closure flange portions are engaged over, around and beneath said container flange portions, in which the downturned-inturned closure flange portion engages the container flange means shoulder to hold the closure sealed to the container sealing between the upper surface of the container flange means and adjacent surface of the outturned closure flange portion; the improvement which comprises a protective plastic coating bonded to the inner food-contacting surfaces of the container bottom and side walls and to the upper surface of the container flange means, a protective plastic coating bonded to the inner food-contacting surfaces of the central closure wall and to the inner surfaces of the closure flange portions, sealing gasket means provided between the outturned closure flange portion and said upper surface of the container flange means characterized by being food-resistant and semi-pliable, the central closure wall including an upturned flange portion to which the outturned closure flange portion is inwardly connected, the upturned closure flange portion abutting the side contained walls, a continuous tear strip score line formed in the downturned-inturned closure flange portion, and a modified tear strip score line portion extending from the tear strip score line in the downturned-inturned closure flange portion arcuately upwardly and inwardly at least substantially midway into the outturned closure flange portion and then arcuately outwardly and downwardly to said tear strip score line.

References Cited in the file of this patent

FOREIGN PATENTS

566,338	Italy	Aug. 30, 1957
744,519	Germany	Jan. 18, 1944