(12) INTERNATIONAL APPLICATION PUBLISHED UNDER THE PATENT COOPERATION TREATY (PCT)

(19) World Intellectual Property Organization
International Bureau

(43) International Publication Date
28 June 2018 (28.06.2018)

WIPO | PCT

(10) International Publication Number
WO 2018/118686 A1

(51) International Patent Classification:
B05C 5/02 (2006.01) *B05C 11/10* (2006.01)
B05B 1/30 (2006.01) *H05K 3/00* (2006.01)

(21) International Application Number:
PCT/US2017/066692

(22) International Filing Date:
15 December 2017 (15.12.2017)

(25) Filing Language: English

(26) Publication Language: English

(30) Priority Data:
16205111.4 19 December 2016 (19.12.2016) EP

(71) Applicant: **NORDSON CORPORATION** [US/US]; 28601 Clemens Road, Westlake, OH 44145 (US).

(72) Inventor: **HENTSCHEL, Lothar**; Eschenweg 1, Egling, Bayern 82544 (DE).

(74) Agent: **AKHAVANNIK, Hussein**; Baker & Hostetler LLP, 1050 Connecticut Avenue, NW, Suite 1100, Washington, DC 20036 (US).

(81) Designated States *(unless otherwise indicated, for every kind of national protection available)*: AE, AG, AL, AM, AO, AT, AU, AZ, BA, BB, BG, BH, BN, BR, BW, BY, BZ, CA, CH, CL, CN, CO, CR, CU, CZ, DE, DJ, DK, DM, DO, DZ, EC, EE, EG, ES, FI, GB, GD, GE, GH, GM, GT, HN, HR, HU, ID, IL, IN, IR, IS, JO, JP, KE, KG, KH, KN, KP, KR, KW, KZ, LA, LC, LK, LR, LS, LU, LY, MA, MD, ME, MG, MK, MN, MW, MX, MY, MZ, NA, NG, NI, NO, NZ, OM, PA, PE, PG, PH, PL, PT, QA, RO, RS, RU, RW, SA, SC, SD, SE, SG, SK, SL, SM, ST, SV, SY, TH, TJ, TM, TN, TR, TT, TZ, UA, UG, US, UZ, VC, VN, ZA, ZM, ZW.

(84) Designated States *(unless otherwise indicated, for every kind of regional protection available)*: ARIPO (BW, GH, GM, KE, LR, LS, MW, MZ, NA, RW, SD, SL, ST, SZ, TZ, UG, ZM, ZW), Eurasian (AM, AZ, BY, KG, KZ, RU, TJ, TM), European (AL, AT, BE, BG, CH, CY, CZ, DE, DK, EE, ES, FI, FR, GB, GR, HR, HU, IE, IS, IT, LT, LU, LV, MC, MK, MT, NL, NO, PL, PT, RO, RS, SE, SI, SK, SM, TR), OAPI (BF, BJ, CF, CG, CI, CM, GA, GN, GQ, GW, KM, ML, MR, NE, SN, TD, TG).

Published:
— *with international search report (Art. 21(3))*

WO 2018/118686 A1

(54) Title: PIEZOELECTRIC JETTING DISPENSER

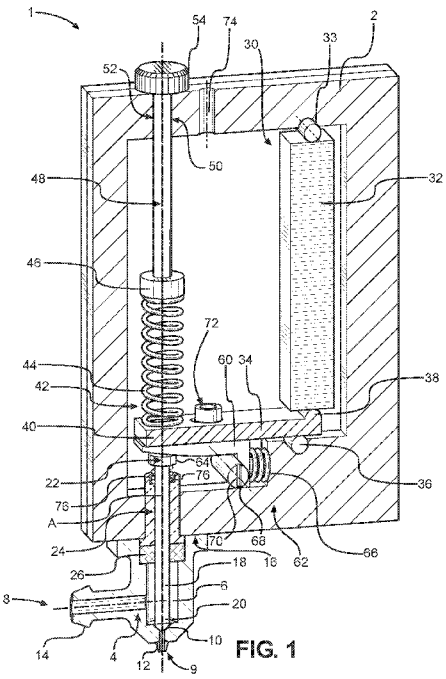

FIG. 1

(57) Abstract: The invention relates to a jetting dispenser (1) comprising a fluid chamber (6), a fluid inlet (8) to the fluid chamber (6), a fluid outlet (9) from the fluid chamber (6), and a valve seat (10) positioned between the fluid inlet (8) and the fluid outlet (9); a valve element (18); a piezoelectric drive assembly (30) configured to reciprocally move at least a portion of the valve element (18) relative to the valve seat (10); the drive assembly (30) comprising a biasing member (42) acting on a contact element for forcing the valve element (18) against the valve seat in an idle state, the contact element being arranged for contact with the valve element (18), an actuation lever (34) engaging the contact element (60, 80), a piezo actuator (32) engaging the actuation lever (34) for pivoting the actuation lever (34) such that the contact element is moved and the valve element (18) is free to disengage the valve seat (10), and an adjustment device for adjusting the position of the contact element (60, 80) such that a force acting on the valve element (18) in the idle state is adjustable.

PIEZOELECTRIC JETTING DISPENSER

This application claims priority to European Patent Application No. 16205111.4 filed December 19, 2016, which is incorporated by reference herein in its entirety.

The invention relates to a jetting dispenser comprising a fluid chamber, a fluid inlet to the fluid chamber, a fluid outlet from the fluid chamber, and a valve seat position between the fluid inlet and the fluid outlet, a valve element, a piezoelectric drive assembly configured to reciprocally move at least a portion of the valve element relative to the valve seat, the drive assembly comprising a biasing member acting on a contact element for forcing the valve element against the valve seat in an idle state, the contact element being arranged for contact with the valve element, an actuation lever engaging the contact element, and a piezo actuator engaging the actuation lever for pivoting the actuation lever such that the contact element is moved and the valve element is free to disengage the valve seat.

Jetting dispensers of the aforementioned type are for example used in different types of dispensing applications in electronic industry applications in which minute amounts of a fluid material is applied onto a substrate. A “jetting dispenser” is a device which ejects or “jets” a droplet of material from the dispenser to land on a substrate, wherein the droplet disengages from the outlet which is formed in a nozzle, before making contact with the substrate. Thus, in a jetting type dispenser, the droplet dispensed is “in flight” between the dispenser and the substrate, and not in contact with either the dispenser or the substrate, for at least a part of the distance between the dispenser and the substrate. Numerous applications exist for jetting dispensers that dispense underfill materials, encapsulation materials, surface mount adhesives, solder pastes, conductive adhesives, and solder mask materials, fluxes, and thermal compounds. One type of a jetting dispenser includes a valve element, in particular needle or tappet, with a tip configured to selectively engage the valve seat. During a jetting operation, the needle of the jetting dispenser is moved relative to the valve seat by a driving mechanism. Contact between the tip of the needle and the valve seat seals off a discharge passage from a fluid chamber supplied with fluid material under pressure. Thus, to dispense droplets of the fluid material, the valve element is retracted from contact with the valve seat to allow a finite amount of the fluid material to flow through the newly formed gap and into the discharge passage. The tip of the needle is then moved rapidly toward the valve seat to close the gap which generates a pressure that accelerates the finite amount of fluid material through the discharge passage and causes a droplet of the material to be ejected, or jetted, from an outlet of the discharge passage.

Jetting devices are configured for controlled movement above the substrate and the fluid material is jetted to land on an intended application area of a substrate. By rapidly jetting

the material “on the fly” (i.e. while the jetting device is in motion), the dispensed droplets may be joined to form a continuous line. Jetting devices may therefore be easily programmed to dispense a desired pattern of fluid material. This versatility has made jetting devices suitable for a wide variety of applications in the electronics industry. For example, underfill material can be applied using a jetting device to dispense a fluid material proximate to one or more edges of the chip, with the material then flowing under the chip by capillary action. The rapid movement toward the valve seat in jetting dispensers as of the aforementioned type is carried out by means of the biasing member acting on a contact element for forcing the valve element against the valve seat. This biasing member acts on the contact element all the time and thus forces the valve element to the valve seat in an idle state. These types of valves are also called “normally closed valves”. The actuation lever is used to raise the contact element, thus giving free the valve element to move out of engagement with the valve seat. The disengaging movement of the valve element may be carried out due to an attachment to the contact element, or by means of an additional biasing member, such as a spring. The spring raises the valve element away from the valve seat, such that the finite amount of fluid may pass into the discharge channel. The actuation lever according to the jetting dispenser of the aforementioned type is actuated by a piezo actuator comprising a piezo crystal which, under influence of electric energy, acts on the actuation lever so as to rotate the actuation lever.

A known jetting dispenser of such a type in general is disclosed in US 2013/0048759.

WO 2014/048643 discloses a jetting dispenser with a direct contact of the piezo crystal and the valve element. The piezo crystal also is used to raise and lower the valve element. A further device which has a direct contact between the piezo actuator and valve element without actuation lever is disclosed in WO 2014/140195.

A problem associated with dispensers with a direct contact between the piezo actuator and the valve element is that the piezo actuator does not provide a large displacement, and therefore an actuation lever normally is necessary to translate the small movement of the piezo crystal into a large movement for the valve element. A larger movement is required to provide a larger gap through which liquid to be dispensed may flow. When the gap is too small highly viscous liquid as for example adhesive is not able to flow to the nozzle in sufficient time. An actuation lever may also reduce the overall size of the jetting dispenser which is beneficial in view of electronic applications.

A jetting dispenser with such an arrangement is for example disclosed in EP 2 736 657 A1 or EP 2 143 503 A1.

A problem associated with jetting dispensers in general is that the valve element accurately needs to seal the outlet and therefore needs to be seated within the valve seat in a predetermined force range. In case the force is too low, the cut-off of the droplet tends to be not accurate and therefore an unclear application pattern is the result. Ultimately a too low force may also lead to an insufficiency of the valve. In case the force is too high, there might be problems when disengaging the valve element from the valve seat, leading to droplets which are too small or form satellites, splashes or an irregular application pattern. Such effects are even worse when a too high force causes bouncing of the valve element in the valve seat. Moreover, a high force also tends to increase the wear on the contacting parts.

A solution for this problem is to use high precision replacement parts to ensure that the valve element seals the nozzle. In these parts, there is no possibility to compensate wear and the parts when experiencing wear need to be replaced. This results in high maintenance costs.

Therefore, there has been a solution in which a sensor is used for the adjustment of the valve element in respect to the valve seat. The valve seat in this solution is provided in a nozzle member which is screwable against a jetting dispenser body, carrying the valve element. A sensor measures the contact between the valve seat and the valve element and indicates, with a signal, when the force is accurate. The signal normally is a lamp, switching from red to green light to indicate to a customer that the position of the nozzle is correct and shall not be screwed further.

However, also this is a very expensive solution, since it needs special sensors for the measurement and electrical connectors. Moreover, the service personnel which screws the nozzle against the jetting body needs to be experienced to place the nozzle correctly and not to overscrew the nozzle. When the nozzle is screwed too much, damages at the valve element may be the result.

Therefore, it is an object of the present invention to provide a jetting dispenser in which the placement of the valve element against the valve seat can easily be set.

The invention solves this problem with a jetting dispenser of the aforementioned type, comprising an adjustment device for adjusting the position of the contact element such that a force acting on the valve element in the idle state is adjusted.

The invention is based on the idea that it is not only possible to set a contact force between the valve element and the valve seat by means of a screwable nozzle element, but also the position of the valve element could be adjusted. This is carried out according

to the present invention by means of the contact element which is movable in the present invention. By providing the contact element in a movable manner with respect to the actuation lever, the force which acts on the valve element in the idle state can be adjusted. It is not necessary to adjust the nozzle member, the piezo actuator or the biasing member which acts on the contact element.

Therefore, according to the invention, the jetting dispenser is greatly simplified. It is not necessary to use high precision parts, since due to the movable contact element which is adjustable by the adjustment device, the position of the valve element and the force acting on the valve element in the idle state can be set after assembly of the jetting dispenser. Moreover, when wear occurs, the contact element can be further adjusted to achieve again the desired contact force between the valve element and the valve seat. It is not necessary to replace the nozzle body, the valve element or other parts for a certain time, since the jetting dispenser can be again adjusted to meet the requirements.

According to a first preferred embodiment, the adjustment device is adapted to adjust the position of the contact element relative to the actuation lever. Moreover, it is preferred that the adjustment device is adapted to adjust a distance between the contact element and the actuation lever in the idle state, the distance being measured along the central axis of the valve element. In the idle state, the valve element is seated in the valve seat and the contact element contacts the valve element to transmit the biasing force of the biasing member to the valve element. The actuation lever is free to move in a predetermined range which is also dependent on the movement of the piezo actuator. Therefore, by means of varying the distance between the contact element and the actuation lever in the idle state, the force applied to the valve element can be varied. The distance is measured along the central axis of the valve element, starting from a contact surface of the contact element which contacts the valve element, and a surface of the actuation lever.

Furthermore, it is preferred that the contact element comprises a threaded portion and is received in a corresponding threaded through-hole in the actuation lever. Providing the contact element in such a threaded through-hole with a threaded portion provides a simple measure for adjusting the distance of the contact surface of the contact element to the actuation lever. The threads are preferably formed as fine-pitch threads such that a self-locking effect can be achieved.

According to a further preferred embodiment, the contact element comprises a contact surface for contacting the valve element and a screw head, the screw head being engageable by said adjustment device. The screw head is preferably arranged opposite the contact surface. The contact element preferably has a substantially pin-shaped form,

extending along a longitudinal axis which forms the rotational axis of the threaded portion. While the contact surface projects out of the actuation lever from a first side of the actuation lever, the screw head extends from a second, opposite side of the actuation lever. The screw head being engageable by said adjustment device. The adjustment device in this instance may comprise a hand driven tool for engaging the screw head, for rotating the contact element, such that the position of the contact element is adjusted.

In a further preferred development, the adjustment mechanism comprises a rotatable shaft engaging the screw head, while allowing movement of the contact element in conjunction with said actuation lever. When the actuation lever moves, it is raised away from the valve element and thus into the direction of the screw head. When a tool or a shaft engages the screw head, the contact element is moved into the direction of the tool or shaft. Moreover, the contact element is slightly rotated, since the actuation lever itself rotates about a rotational point when actuated by the piezo actuator. The rotatable shaft according to this embodiment engages the screw head while still allowing movement of the contact element on this rotational movement. Thus, the shaft may have an engagement section which provides space for movement, such as a long recess or the like. Preferably, the rotatable shaft comprises a gimbal joint. A gimbal joint allows torque transmission via an angled connection and thus allows bending of the shaft. Since the contact element is not only moved along a vertical axis, but also rotated, it is preferred that the shaft comprises such a gimbal joint. A gimbal joint also is known under the name of a Cardan joint.

According to a further embodiment, the contact element is in the form of a wedge positioned between the actuation lever and the valve element. According to such an embodiment, the adjustment device preferably is adapted to adjust the lateral position of the wedge. When the wedge is laterally moved between the valve element and the actuation lever, the distance of the valve element (in the idle state) and the actuation lever is adjusted. For moving the wedge, a screw or the like can be provided. In an alternative, an eccentric element is provided which acts together with the wedge for repositioning the wedge and adjusting its position.

In a particularly preferred embodiment, the adjustment device comprises a force limiting mechanism, limiting the force acting on the valve element. The force limiting mechanism preferably limits the force to a predetermined threshold force which is in the range that the valve element is securely seated in the valve seat. As described in the introductory portion, it is important that the force is not too low and not too high. A force which is too low causes insufficient cut-off of the fluid and therefore insufficient drops which tend to produce so-called satellites. A force which is too high causes a relatively high wear at the parts which again results in a poor application pattern. When adjusting the contact

element for increasing the force, it might happen that the force is set to a value which is too high. The force limiting mechanism according to this embodiment of the invention limits the force so that the service personnel is prevented from adjusting the contact element in a manner that a too high force is the result.

In a preferred embodiment, the force limiting mechanism comprises a tightening torque limiting device. This embodiment in particular is preferred when the contact element is provided with the threaded portion and has to be rotated to be repositioned. When the contact element is repositioned in the idle state, the torque acting on the contact element for rotating the contact element is an indicator for the force acting on the valve element. When limiting this tightening torque, also the force acting on the valve seat and the valve element is limited.

In a further preferred development, the force limiting mechanism comprises a clutch, the clutch being adapted to open at a predetermined torque limit. The clutch can be formed as a friction clutch which opens when a predetermined friction is exceeded. The clutch may also be formed with a spring loaded part which opens when the spring force is exceeded. There are further alternatives of such clutches which can be used in conjunction with the present invention.

In a preferred development, the clutch comprises a disc with a plurality of recesses and a corresponding spring biased protrusion element, wherein upon circumferential movement of said protrusion element, which acts as a drive pin, said disc is driven, and wherein a force of a spring biasing the spring biased protrusion element against the disc is set such that, when a predetermined torque acting on the disc is reached, the protrusion element is pushed out of the corresponding recess against the force of the spring rather than driving the disc. The disc preferably is provided at the driven side of the clutch and the spring biased pin on the drive side. The other way round however is also preferred. The recesses may be formed as semi-sphericals and the protrusion element as a ball. When the force of the spring biasing the protrusion element is overcome, the protrusion element “jumps” to the next recess. When the tightening torque limit is reached, the spring biased protrusion element is not able to further rotate the disc, but will only move from recess to recess. This is also recognizable based on an acoustic signal for the service personnel, such that the service personnel may recognize that the force limit is reached. The spring biased protrusion element preferably is carried by a rotatable handle which is accessible from outside the jetting dispenser.

In a further preferred embodiment which is in addition to the previously described clutch or alternatively to the previously described clutch, the clutch is a magnetic clutch, wherein upon exceeding a magnetic force the clutch opens. In this embodiment, for example, a

disc may be provided with a first plurality of magnets and a second disc may be provided with a second plurality of magnets, both discs do not contact each other, however the first disc is able to drive the second disc due to the magnetic forces. This embodiment also has the benefit that wear of the parts is prevented, since the parts of the clutch do not contact each other.

Moreover, it is preferred that the adjustment device comprises electromagnetic elements for adjusting the position of the contact element. The electromagnetic elements may form a clutch which is electromagnetically driven, such that the force limit can be adjusted. The electromagnetic elements may also be used for actively rotating the contact element, for adjusting its position. Each electric motor also has a maximum torque which is the limit of the tightening torque it can deliver. Thus, an electric motor comprises a torque limit which can be matched with the predetermined torque and force limit for the contact element. Preferably three electromagnet elements are arranged offset to each other by approximately 120°. The electromagnetic elements preferably are arranged such that they form a stator of an electric motor. In this instance, preferably an electric rotor is provided, which is connected to the contact element. The electromagnetic elements preferably are controlled such that the electric rotor is rotated for adjusting the position of the contact element. The electric rotor preferably comprises a magnet which is attached to the contact element. The magnet preferably is a permanent magnet. This allows holding the rotational position of the magnet even when the electromagnetic elements are powerless. The magnet thus is hold by the cogging torque of the electromagnetic elements or a yoke which is part of the respective electromagnetic element.

In the following, the invention is described in more detail with respect to the accompanying drawings. In the drawings:

Fig. 1 shows a partial cut perspective view of a first embodiment of the invention;

Fig. 2 shows a cut of a second embodiment of the invention;

Fig. 3 shows a cut of a third embodiment of the invention;

Fig. 4 shows a perspective cut of a fourth embodiment of the invention; and

Fig. 5 shows a perspective detail of Fig. 4.

A jetting dispenser 1 according to the invention comprises a dispenser body 2 and a nozzle member 4. The nozzle member 4 forms the fluid chamber 6 which has an inlet 8 and an outlet 9. Between the inlet 8 and the outlet 9 a valve seat 10 is provided. Between

the valve seat 10 and the outlet 9 a discharge channel 12 is formed. The inlet 8 is provided with a barb connector 14 and can be connected with a pressurized fluid cartridge. The nozzle member 4 is connected to the dispenser body 2 via a fixing portion 16. It is removably fixed against the dispenser body 2.

Within the fluid chamber 6 a valve element 18 is arranged which has a tip 20 for engaging the valve seat 10. The valve element 18 runs into the dispenser body 2 and comprises a head 22. The valve element 18 is guided within a bushing 24 which carries a sealing ring 26 at its lower end.

The jetting dispenser 1 moreover comprises a piezoelectric drive assembly 30 configured to reciprocally move at least a portion of the valve element 18 relative to the valve seat 10. The piezoelectric drive assembly 30 comprises a piezo actuator 32 which is formed as a piezo stack. The piezo actuator 32 is supported at a first support 33 against the dispenser body 2 and engages at the opposite end an actuation lever 34. The actuation lever 34 is pivotably seated on a support 36 and comprises a protrusion 38 engaging the piezo actuator 32. At the opposite end of the actuation lever 34, actuation lever 34 comprises an engagement portion 40 for engagement with the valve element 18.

For biasing the valve element 18 into the closed position (as shown in the figures) a biasing member 42 in the form of a coiled spring 44 is provided in the dispenser body 2. A coiled spring 44 rests on the engagement section 40 of the actuation lever 34, and on its other end is supported by a plate 46. Plate 46 is supported in turn by a shaft 48 comprising a screw threaded portion 50 running through a respective threaded through-hole 52 of the dispenser body 2. Shaft 48 is outside the dispenser body 2 provided with a knob 54 for rotating the shaft 48 such that the vertical position of plate 46 is adjustable. This provides in this embodiment (Fig. 1) means for adjusting the force of the spring 44.

For adjusting the force acting on the valve seat 10, the jetting dispenser 1 according to the present invention comprises a contact element 60 which is positioned between the engagement portion 40 of the actuation lever 34 and the head 22 of the valve element 18. The position of the contact element 60 is adjustable by means of an adjustment device 62.

In the embodiment shown in Fig. 1, the contact element is in the form of a wedge and comprises an inclined surface 64 which in inclined with respect to axis A which is the longitudinal axis of the valve element 18 and also the movement axis of valve element 18. By moving the contact element 60 with respect to Fig. 1 to the left or right position, the inclined surface 64 is moved relative to axis A and thus relative to the valve element 18,

such that a distance between the head 22 of valve element 18 and the actuation lever 34 can be adjusted.

In the embodiment shown in Fig. 1 the adjustment device comprises a spring 66 forcing the wedge-shaped contact element 60 into engagement with the head 22. The spring 60 has a predetermined spring force and in turn excerpts a predetermined force onto the contact element 60. The spring 60 consequently acts in a force limiting manner, limiting the contact force of the tip 20 and the valve seat 10.

For fixing the relative position of the contact element 60 with respect to the actuation lever 34, a screw 72 is provided. Screw 72 is screwed into a respective screw threaded portion of the contact element 60 and runs through an elongated hole in the actuation lever 34 and thus can fix the contact element 60 to the actuation lever 34. Screw 72 is accessible via an opening 74 in the dispenser body 2. By means of inserting a respective tool through the opening 74 the screw 72 can be screwed or unscrewed. For adjusting the position of the contact element 60 in this embodiment (Fig. 1), first of all the screw 72 has to be loosened and afterwards the position of the contact element 60 can be adjusted by means of the force of the spring 66. When the desired position and thus the desired distance between head 22 and actuation lever 34 has been set, screw 72 can be fastened again.

The adjustment device further comprises an eccentric element 68 limiting the movement of the contact element 60. Eccentric element 68 comprises a recess 70 into which a screw driver can be seated. Recess 70 or slot is accessible from outside the jetting dispenser 1 by a service personnel. By rotating eccentric element 68, the contact element 60 may be moved to the right direction with respect to Fig. 1. This movement is used when the nozzle member 4 has to be changed for maintenance reasons. When the nozzle member 4 is demounted it is beneficial to limit the movement of the contact element, since otherwise the spring 66 would push the contact element 60 too far to the left in Fig. 1. This may lead to a too high contact force when a replacement nozzle member 4 would be mounted in this state. Therefore, when replacing the nozzle member 4, the service person would use the eccentric element 68 during replacement and after mounting has been completed, release the eccentric element 68 again so that the spring 66 is able to act on the contact element 60 as described above.

When now the piezo actuator 32 is powered, it will extend its volume and thus push against support 38, in turn rotating the actuation lever 34 and lifting the engagement section 40 together with the contact element 60. A drive spring 76 provided between bushing 24 and head 22 lifts the valve element 18 respectively, such that fluid can drain into the discharge channel 12. When the piezo actuator 32 is depowered again, the

volume is reduced and the biasing spring 44 can push down the valve element 18 again into engagement with the valve seat 10. The pressure in discharge channel 12 is increased and a droplet will be jetted out of the outlet 9.

The embodiments shown in Figs. 2 to 4 differ from the first embodiment (Fig. 1) in particular therein, that the contact element 80 in the embodiments of Figs. 2 to 4 is substantially pin-shaped and not wedge-shaped, as it is in the embodiment shown in Fig. 1. The further elements are depicted with the reference signs used in Fig. 1 and in so far reference is made to the above description of Fig. 1. In the following, in particular the difference between the first and the further embodiments will be described.

According to Fig. 2, the contact element 80 comprises a contact surface 82 in contact with the head 22 of valve element 18. Moreover, the contact element 80 comprises a threaded portion 84 seating in a respective threaded through-hole 86 formed in the engagement portion 40 of the actuation lever 34. In this embodiment, biasing spring 44 is again seated against a plate 46 which however is not adjustable in position.

The distance between contact surface 82 and actuation lever 34 can be adjusted by respectively rotating the contact element 80. The respective threaded connection between the threaded shaft 84 and the through-hole 86 causes a movement of the contact surface 82 either into the direction of head 22 or away from it, dependent on the rotational direction. Thus, by means of rotation, the distance of the contact surface 82 to the actuation lever 34 can be adjusted.

For rotating the contact element 80, the contact element 80 comprises a screw head 88. The screw head 88 comprises two opposing pins which are received in a hollow shaft 90 which has a slot extending in the axial direction. The shaft 90 comprises a hollow interior 92 such that the screw head 88 can be received within the shaft 92. The slot (which cannot be seen in Fig. 2 due to the cut view) provides a formfitting engagement with the respective pins 94 of the screw head 88, such that a formfitting engagement into the circumferential direction is achieved. At a top end, the shaft 90 is connected via a gimbal joint 96 to tool 98. The gimbal joint 96 is necessary, since when the actuation lever 34 pivots about its pivot point P, on the one hand the contact element 80 will be lifted upwards, but also rotated together with the actuation lever 34 about the pivot point P. Therefore it is deflected slightly to the right hand side in Fig. 2 and therefore shaft 90 needs to allow this sideward movement. The gimbal joint 96 provides this feature.

Tool 98 is arranged received within an opening 100 of the dispenser body 2 and comprises a top recess 102 engaged by a respective tool. Moreover, tool 98 comprises a circumferential groove 104 in which a respective pin 106 which is fixed by a nut 108

protrudes. The pin 106 causes the tool 98 to stay at the same axial position with respect to axis A. When tool 98 is rotated, the torque is transmitted via gimbal joint 96 to shaft 90 and via the pins 94 to the contact element 80. The contact element in turn is rotated, thus causing the distance between the contact surface 82 and actuation lever 34 to increase. When the dispenser 1 is in the idle state, and thus the piezo actuator 32 is not actuated, the valve element 18 contacts the valve seat 10, and by rotating the contact element 84 the force acting from the valve element 18 to the valve seat 10 can be adjusted.

Preferably, tool 98 is rotated under usage of a torque wrench by a service personnel. Using a torque wrench to engage the recess 102, such that the torque supplied to the contact element 80 is limited.

The embodiments shown in Figs. 3 and 4 include in addition to the elements shown in Fig. 2 integrated force limiting means. Again, identical elements from Figs. 1 and 2 are depicted with the same reference signs in Figs. 3 and 4, and in so far reference is made to the above description to Figs. 1 and 2.

According to Fig. 3 the embodiment is substantially identical to the embodiment of Fig. 2, however includes a force limiting mechanism 110. The force limiting mechanism 110 comprises a clutch 112 between a drive side and a driven side which will be described now. Shaft 90 is connected via gimbal 96 to a further shaft 114 of the driven side of the clutch. Shaft 114 is connected to a disc 116. Disc 116 is supported by an axial and radial acting bearing 118. The shaft 114 is provided with freewheeling device 120 which also provides a radial bearing for the shaft 114.

The drive side comprises a handle 122 which carries eccentrically a protrusion element 124 in the form of a ball. The ball is seated within a recess 126 and biased by means of a spring 128. The disc 116 comprises a plurality of recesses 130 which are provided in a ring shape on the disc 116.

When a user rotates the handle 122 about axis A, also the protrusion element 124 is rotated and pushes against a side surface of the respective recess 130. When the torque or especially the counter torque acting on the shaft 114 is low enough, the disc 116 can be rotated by the protrusion element 124 pushing against this side surface. When disc 116 is rotated, also shaft 90 is rotated and in turn contact element 80 is rotated and thus the distance between contact surface 82 and actuation lever 34 is adjusted. When however the counter torque has reached a predetermined level, the force of the spring 128 will be overcome by the protrusion element 124 being pushed into the recess 126 and thus sliding out of the respective recess 130. When the protrusion element 124 slides out of the recess 130 no torque transmission can be carried out and the clutch 112 is

open. Thus, it is not possible for a service personnel to apply a too high force to the valve seat 110. The service personnel can simply rotate the handle 122 until the clutch 112 opens.

The freewheeling device 120 is provided between the shaft 114 and a bushing 121 fixed to the handle 122. The freewheeling device 120 allows rotation of the handle 122 relative to the shaft 114 in the tightening direction. Thus, also when the clutch opens after the predetermined force limit has been reached, the handle can be rotated 122, while the shaft 114 stands still. The freewheeling device however is adapted to block the relative movement when the handle is rotated into the loosening direction. The freewheeling device 120 thus acts as a so called clamping roller freewheeling hub. In the loosening direction the rotational movement therefore is rather transferred via the blocked freewheeling device 120 than via the clutch. Thus, in the loosening direction it is possible to apply higher torque than in the tightening direction. This is in particular beneficial for maintenance reasons. In case an adhesive liquid drains into the region of the contact element 80 it may adhere the contact element 80 to the through hole 86. In this case it is possible to break this adhesion due to the blocking of the freewheeling device 120.

According to the embodiment shown in Fig. 4 and 5, the force limiting mechanism 110 is based on electromagnetic effects.

Again, identical elements in Fig. 4 and 5 are depicted with the same reference signs as shown in Figs. 1 to 3 and therefore, reference is made to the above description of Figs. 1 to 3.

The force limiting mechanism 110 comprises first, second and third coils 132a, 132b, 132c which are stacked upon each other and rotated against each other by 120 degree. The coils 132a, 132b, 132c are provided with corresponding yokes 133a, 133b, 133c. The yokes 133a, 133b, 133c are substantially U-shaped and run through the respective coil 132a, 132b, 132c. Each yoke 133a, 133b, 133c comprises two legs. Yoke 132a comprises legs 142a, 142b, yoke 132b comprises legs 144a, 144b, and yoke 132c comprises legs 146a, 146b. The legs 142a, 142b, 144a, 144b, 146a, 146b are each pairwise parallel to each other.

The coils 132a, 132b, 132c are connected via wires 134 to the control 140. The control is adapted to energize the coils 132a, 132b, 132c in such a manner that a rotating electromagnetic field is generated between the legs 142a, 142b, 144a, 144b, 146a, 146b of the yokes 133a, 133b, 133c such that the magnet 94 is caused in rotation and in turn the contact element 80 is screwed into or out of the screw threaded bore 86. Thus, by

means of energizing the coils 132a, 132b, 132c respectively the distance between the contact element 80 and the head 22 can be adjusted.

By respectively powering the coils 132a, 132b, 132c the maximum torque is adjustable. Moreover, by respectively powering the coils it is possible to electrically rotate the contact element 80 and therefore, according to this embodiment (Fig. 4, 5), adjustment of the position of the contact element 80 can be carried out automatically with a respective control tool.

When the coils 132a, 132b, 132c are depowered the magnet 94 is attracted to the respective yoke, in Fig. 5 to the legs 146a, 146b of yoke 133c. The magnet 94 is held in place by the cogging torque of the arrangement. Thus, this arrangement forms a clutch 112.

The control 140 can be provided with a respective switch for setting the force and hence the maximum torque. The control 140 can also be connected to other dispensers as well. The control 140 may be programmes such that after each start of the dispenser, the coils 132a, 132b, 132c are energized so that the desired closing force of the valve is set.

Claims

1. A jetting dispenser (1) comprising:

a fluid chamber (6), a fluid inlet (8) to the fluid chamber (6), a fluid outlet (9) from the fluid chamber (6), and a valve seat (10) positioned between the fluid inlet (8) and the fluid outlet (9);

a valve element (18);

a piezoelectric drive assembly (30) configured to reciprocally move at least a portion of the valve element (18) relative to the valve seat (10);

the drive assembly (30) comprising:

a biasing member (42) acting on a contact element for forcing the valve element (18) against the valve seat in an idle state, the contact element being arranged for contact with the valve element (18),

an actuation lever (34) engaging the contact element (60, 80),

a piezo actuator (32) engaging the actuation lever (34) for pivoting the actuation lever (34) such that the contact element is moved and the valve element (18) is free to disengage the valve seat (10), and

an adjustment device for adjusting the position of the contact element (60, 80) such that a force acting on the valve element (18) in the idle state is adjustable.

2. The jetting dispenser according to claim 1, wherein the adjustment device is adapted to adjust the position of the contact element (60, 80) relative to the actuation lever (34).

3. The jetting dispenser according to claim 1, wherein the adjustment device is adapted to adjust a distance between the contact element (60, 80) and the actuation lever (34) in the idle state, the distance being measured along the central axis (A) of the valve element (18).

4. The jetting dispenser according to claim 1, wherein the contact element (60, 80) comprises a threaded portion (84) and is received in a corresponding threaded trough hole (86) in the actuation lever (34).

5. The jetting dispenser according to claim 4, wherein the contact element (80) comprises a contact surface (82) for contacting the valve element (18) and a screw head (88), the screw head (88) being engageable by said adjustment device.

6. The jetting dispenser according to claim 5, wherein the adjustment device comprises a rotatable shaft (114) engaging the screw head (88), while allowing movement of the contact element (80) in conjunction with said actuation lever (34).

7. The jetting dispenser according to claim 6, wherein said rotatable shaft comprises a gimbal joint (96).

8. The jetting dispenser according to claim 1, wherein the contact element (60) is in the form of a wedge positioned between the actuation lever (34) and the valve element (18).

9. The jetting dispenser according to claim 8, wherein the lateral position of said wedge is adjustable by means of said adjustment device.

10. The jetting dispenser according to claim 1, wherein said adjustment device comprises a force limiting mechanism (110), limiting the force acting on the valve element (18).

11. The jetting dispenser according to claim 10, wherein the force limiting mechanism (110) comprises a tightening torque limiting device.

12. The jetting dispenser according to claim 10, wherein the force limiting mechanism comprises a clutch (112), the clutch (112) being adapted to open at a predetermined torque limit.

13. The jetting dispenser according to claim 12, wherein the clutch (112) comprises a disc (116) with a plurality of recesses (130) and a corresponding spring biased protrusion element (124), wherein upon circumferential movement of said protrusion element (124) acts as a drive pin and said disc (116) is driven, wherein a force of a spring (128) biasing the spring biased protrusion element (124) against the disc (116) is set such that, when a predetermined torque acting on the disc (116) is reached, the protrusion element (124) is pushed out of the corresponding recess (130) against the force of the spring (128) rather than driving the disc (116).

14. The jetting dispenser according to claim 12, wherein the clutch (112) is a magnetic clutch, wherein upon exceeding a magnetic force the clutch (112) opens.

15. The jetting dispenser according to claim 1, wherein the adjustment device comprises electromagnetic elements (132a, 132b, 132c) for adjusting the position of the contact element (60, 80).

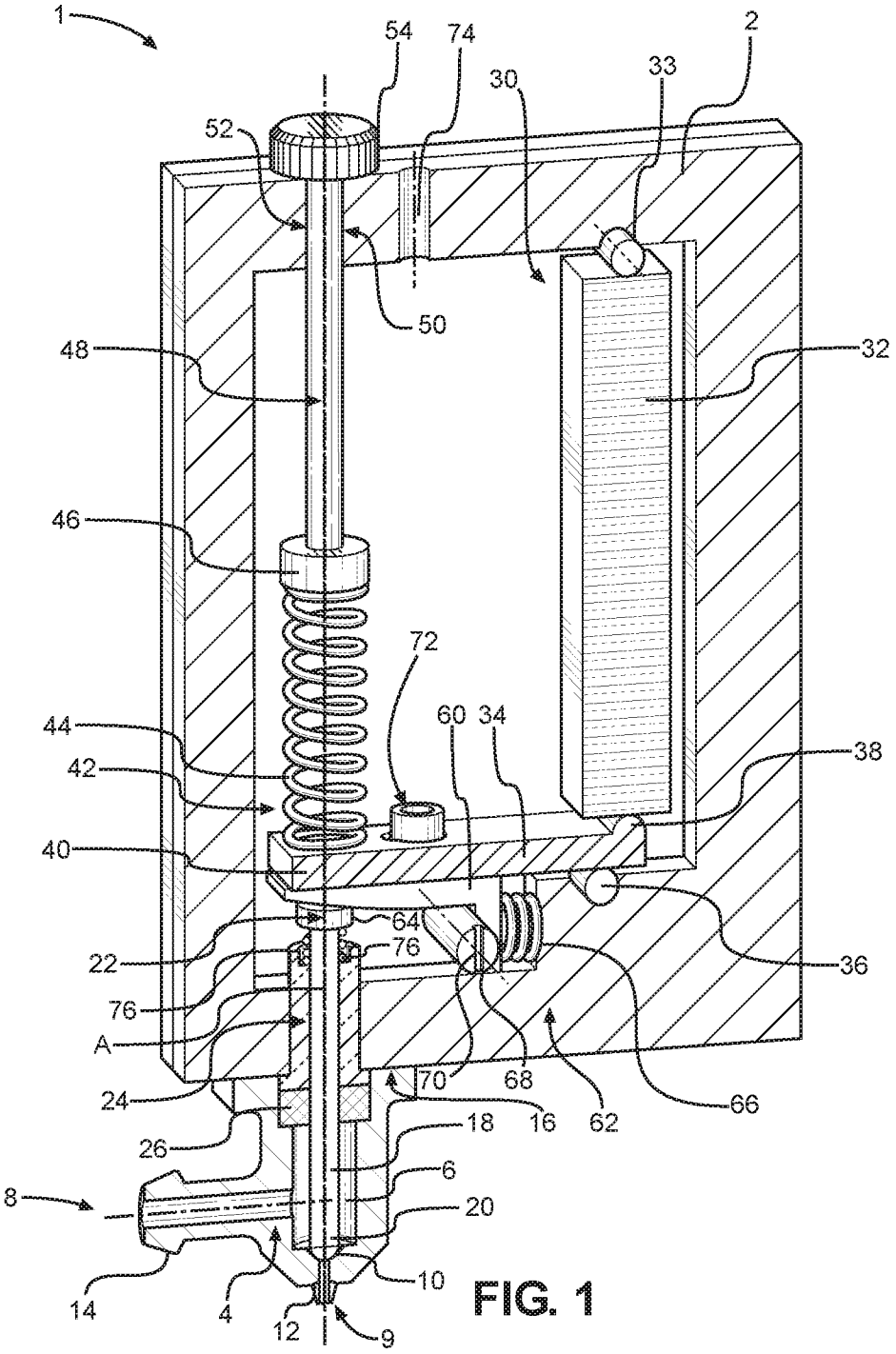
1
54
74
2
30
33
52
50
48
32
46
72
60
34
44
38
42
40
64
76
22
36
76
A
70
68
66
24
18
16
62
26
6
8
20
10
14
4
12
9

FIG. 1

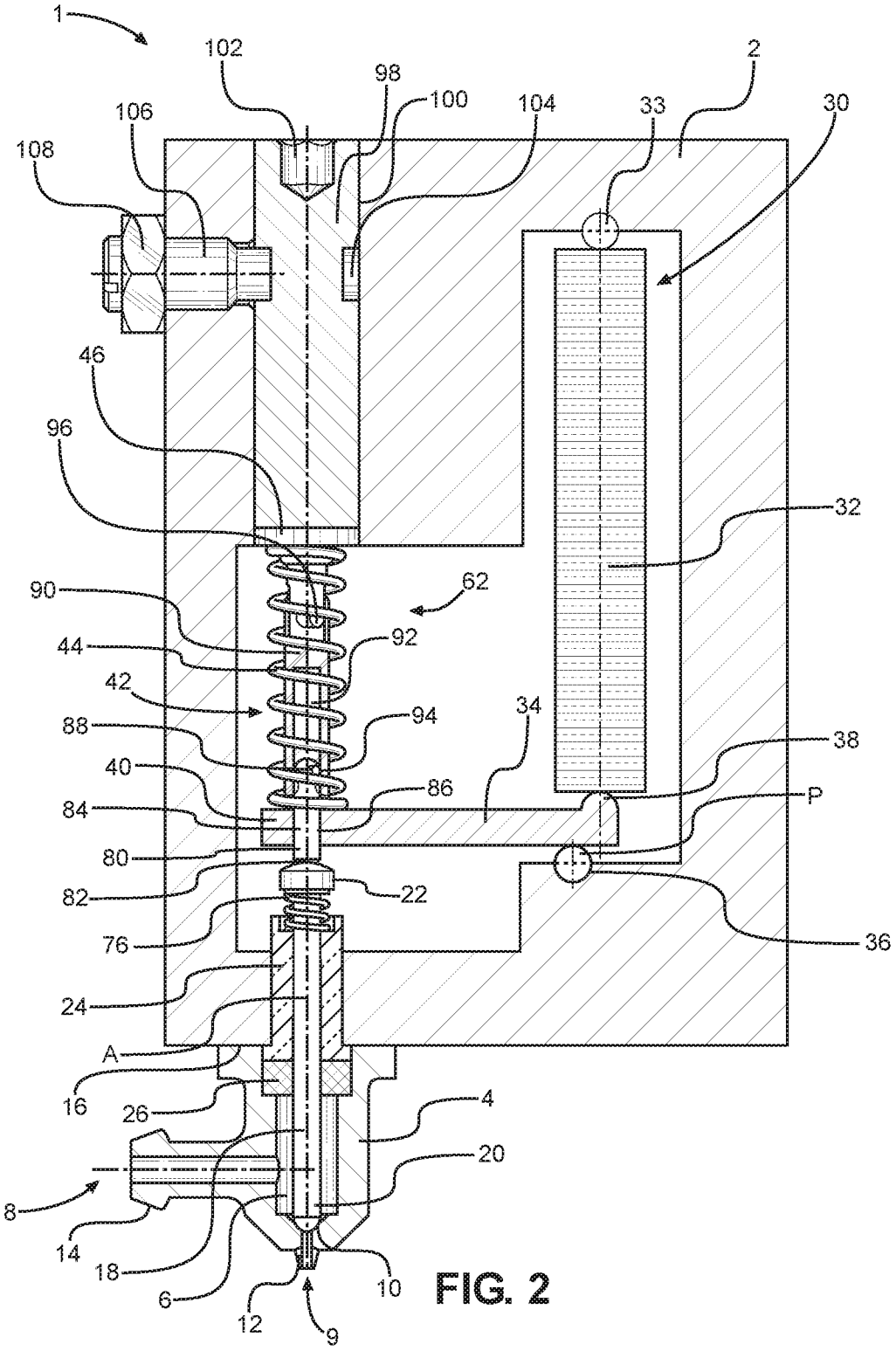
1
102
98
100
104
33
2
30
106
108
46
96
32
62
90
92
44
42
94
34
38
88
40
86
P
84
80
22
82
36
76
24
A
16
26
4
20
8
14
18
6
10
12
9

FIG. 2

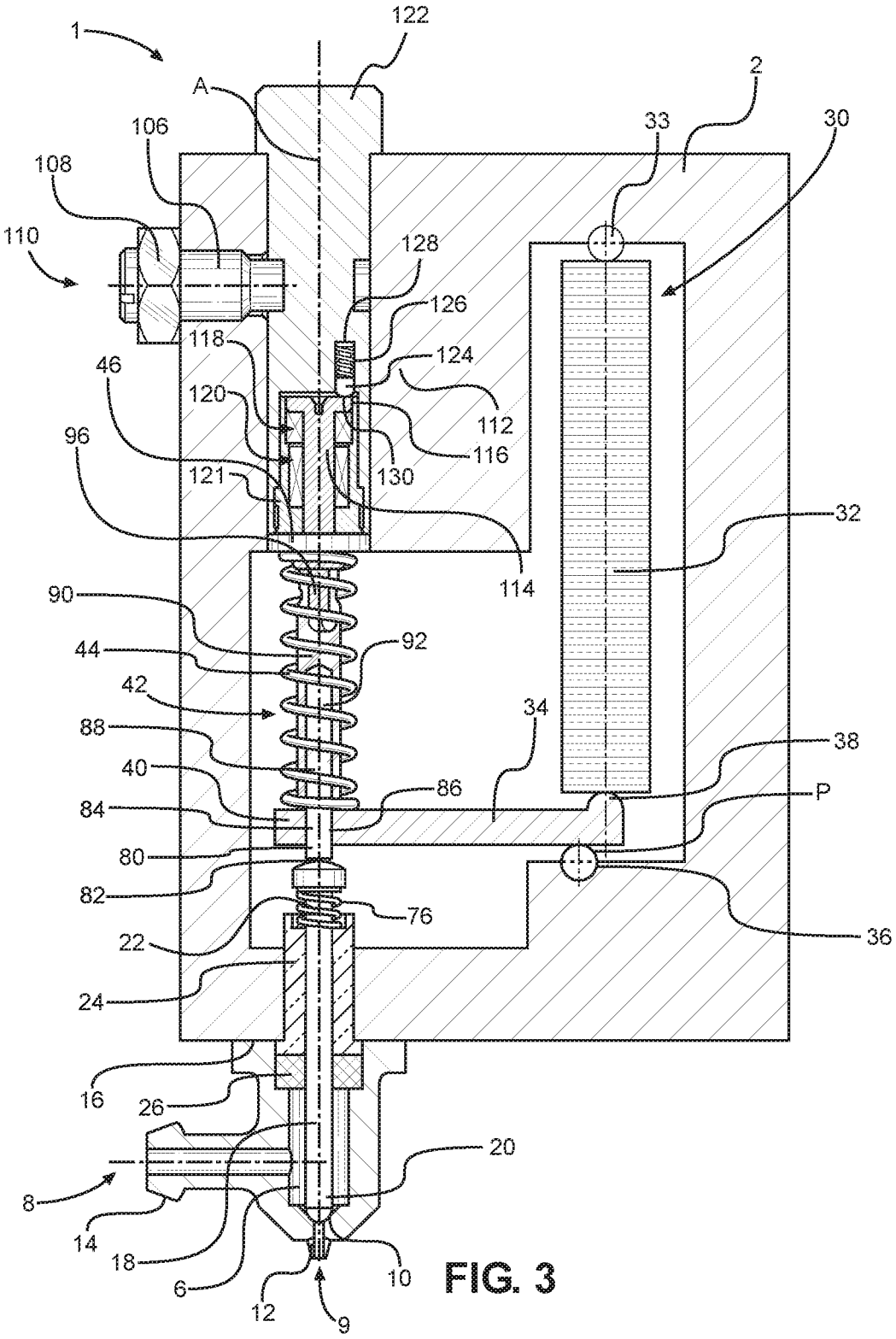
1
122
A
2
106
33
30
108
110
128
126
118
124
46
120
112
116
96
121
130
32
114
90
92
44
42
34
88
38
40
86
84
P
80
82
76
36
22
24
16
26
20
8
14
18
6
10
12
9

FIG. 3

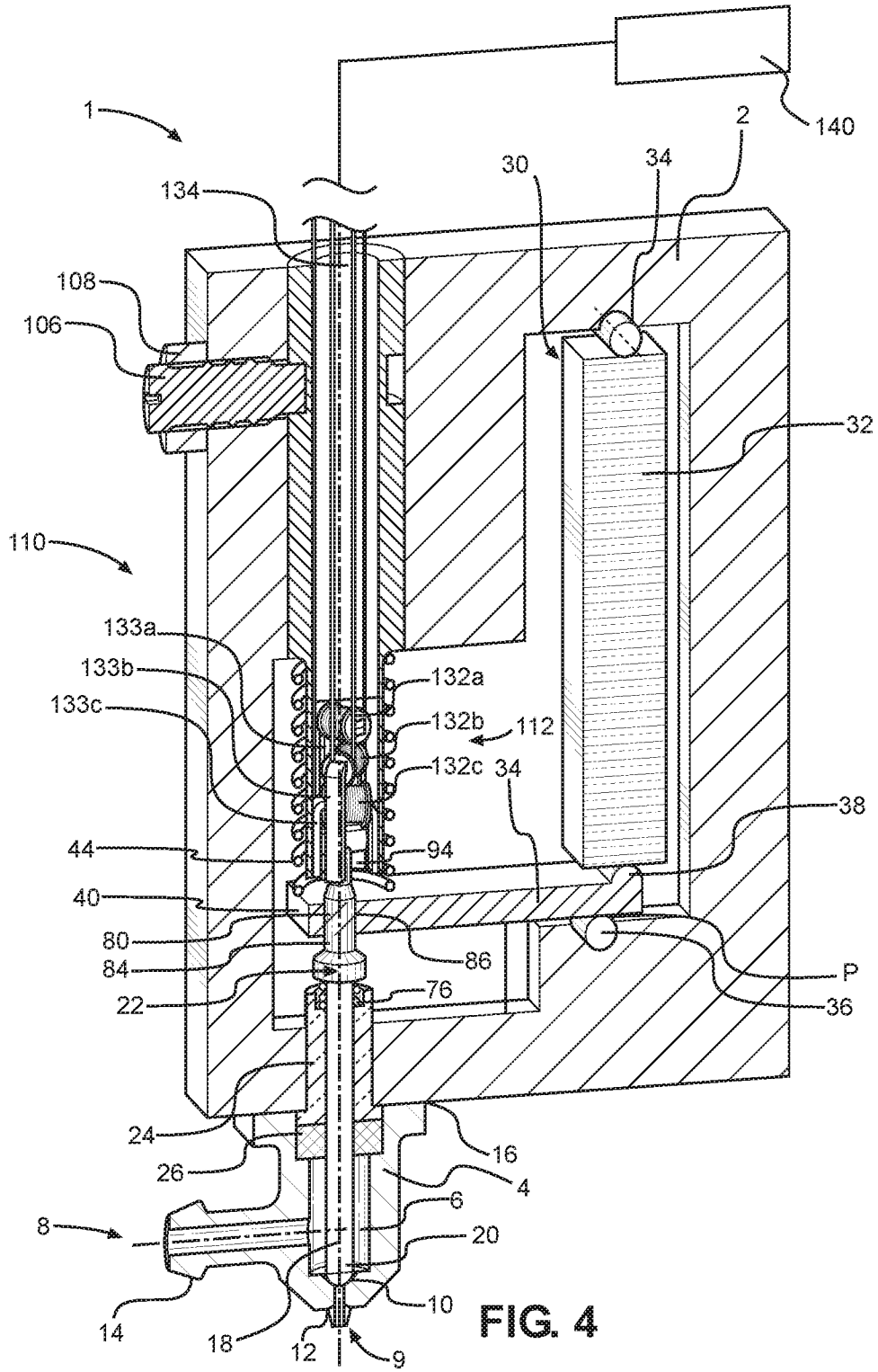
1
140
2
30
34
134
108
106
32
110
133a
133b
133c
132a
132b
112
132c
34
38
44
94
40
80
86
84
P
22
76
36
24
16
26
4
6
8
20
10
14
18
12
9

FIG. 4

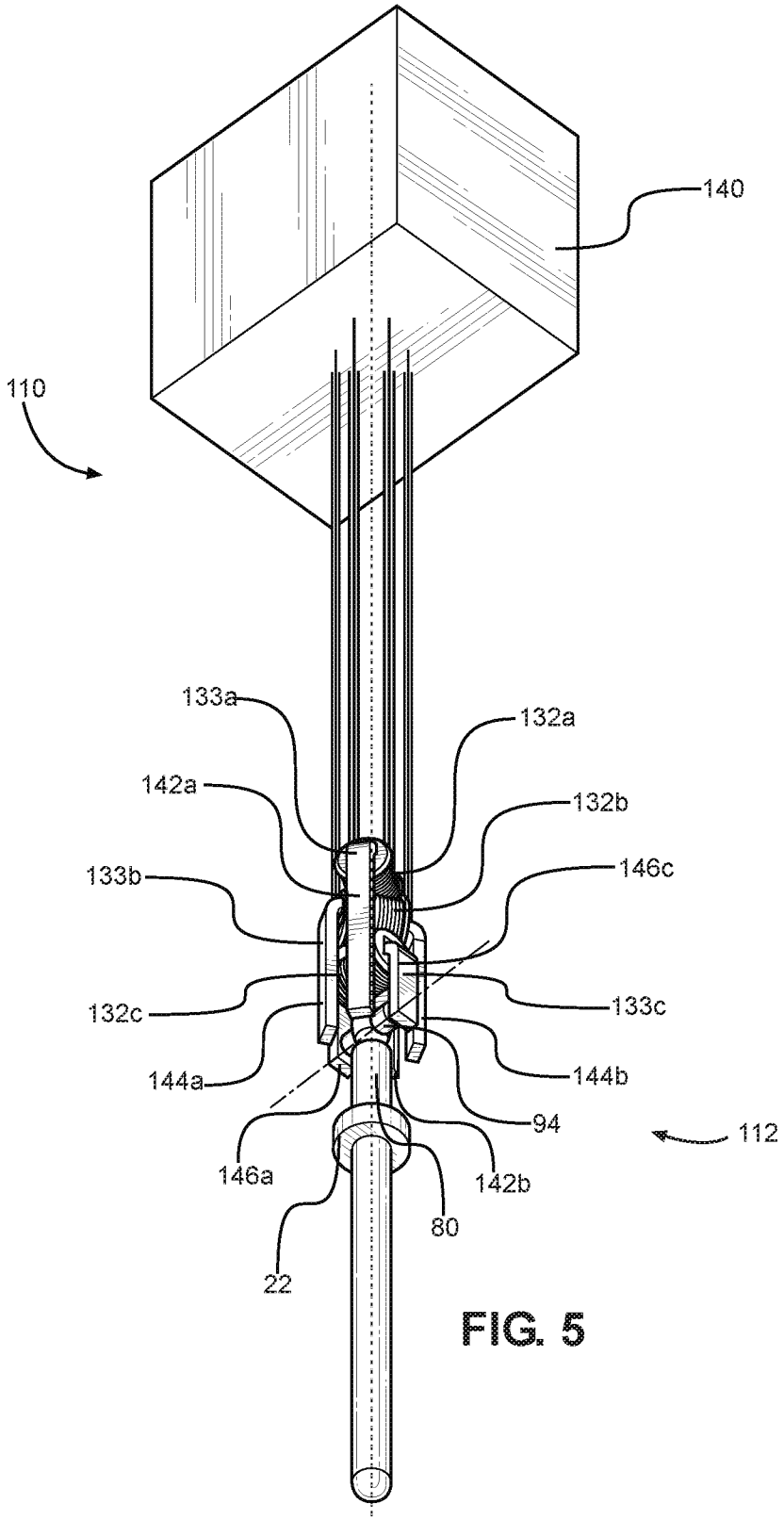
140
110
133a
132a
142a
132b
133b
146c
132c
133c
144a
144b
94
112
146a
142b
80
22

FIG. 5

INTERNATIONAL SEARCH REPORT

International application No.
PCT/US2017/066692

A. CLASSIFICATION OF SUBJECT MATTER

IPC(8) - B05C 5/02; B05B 1/30; B05C 11/10; H05K 3/00 (2018.01)

CPC - B05C 5/0225; B05B 1/304; B05B 1/3046; B05C 5/0291; B05C 11/1002; B05C 11/1034; H05K 3/0085 (2018.01)

According to International Patent Classification (IPC) or to both national classification and IPC

B. FIELDS SEARCHED

Minimum documentation searched (classification system followed by classification symbols)

See Search History document

Documentation searched other than minimum documentation to the extent that such documents are included in the fields searched

USPC - 222/504; 239/562; 239/583; 239/584; 427/421.1 (keyword delimited)

Electronic data base consulted during the international search (name of data base and, where practicable, search terms used)

See Search History document

C. DOCUMENTS CONSIDERED TO BE RELEVANT

Category*	Citation of document, with indication, where appropriate, of the relevant passages	Relevant to claim No.
A	US 2005/0236438 A1 (CHASTINE et al) 27 October 2005 (27.10.2005) entire document	1-15
A	US 2013/0048759 A1 (AGUILAR et al) 28 February 2013 (28.02.2013) entire document	1-15
A	US 2016/0339470 A1 (NORDSON CORPORATION) 24 November 2016 (24.11.2016) entire document	1-15

☐ Further documents are listed in the continuation of Box C. ☐ See patent family annex.

* Special categories of cited documents:

"A" document defining the general state of the art which is not considered to be of particular relevance

"E" earlier application or patent but published on or after the international filing date

"L" document which may throw doubts on priority claim(s) or which is cited to establish the publication date of another citation or other special reason (as specified)

"O" document referring to an oral disclosure, use, exhibition or other means

"P" document published prior to the international filing date but later than the priority date claimed

"T" later document published after the international filing date or priority date and not in conflict with the application but cited to understand the principle or theory underlying the invention

"X" document of particular relevance; the claimed invention cannot be considered novel or cannot be considered to involve an inventive step when the document is taken alone

"Y" document of particular relevance; the claimed invention cannot be considered to involve an inventive step when the document is combined with one or more other such documents, such combination being obvious to a person skilled in the art

"&" document member of the same patent family

Date of the actual completion of the international search	Date of mailing of the international search report
28 January 2018	13 FEB 2018
Name and mailing address of the ISA/US Mail Stop PCT, Attn: ISA/US, Commissioner for Patents P.O. Box 1450, Alexandria, VA 22313-1450 Facsimile No. 571-273-8300	Authorized officer Blaine R. Copenheaver PCT Helpdesk: 571-272-4300 PCT OSP: 571-272-7774