Mar. 3, 1925. 1,528,188

A. M. FROST

THREAD GRINDING MACHINE

Original Filed Sept. 7, 1918 6 Sheets-Sheet 1

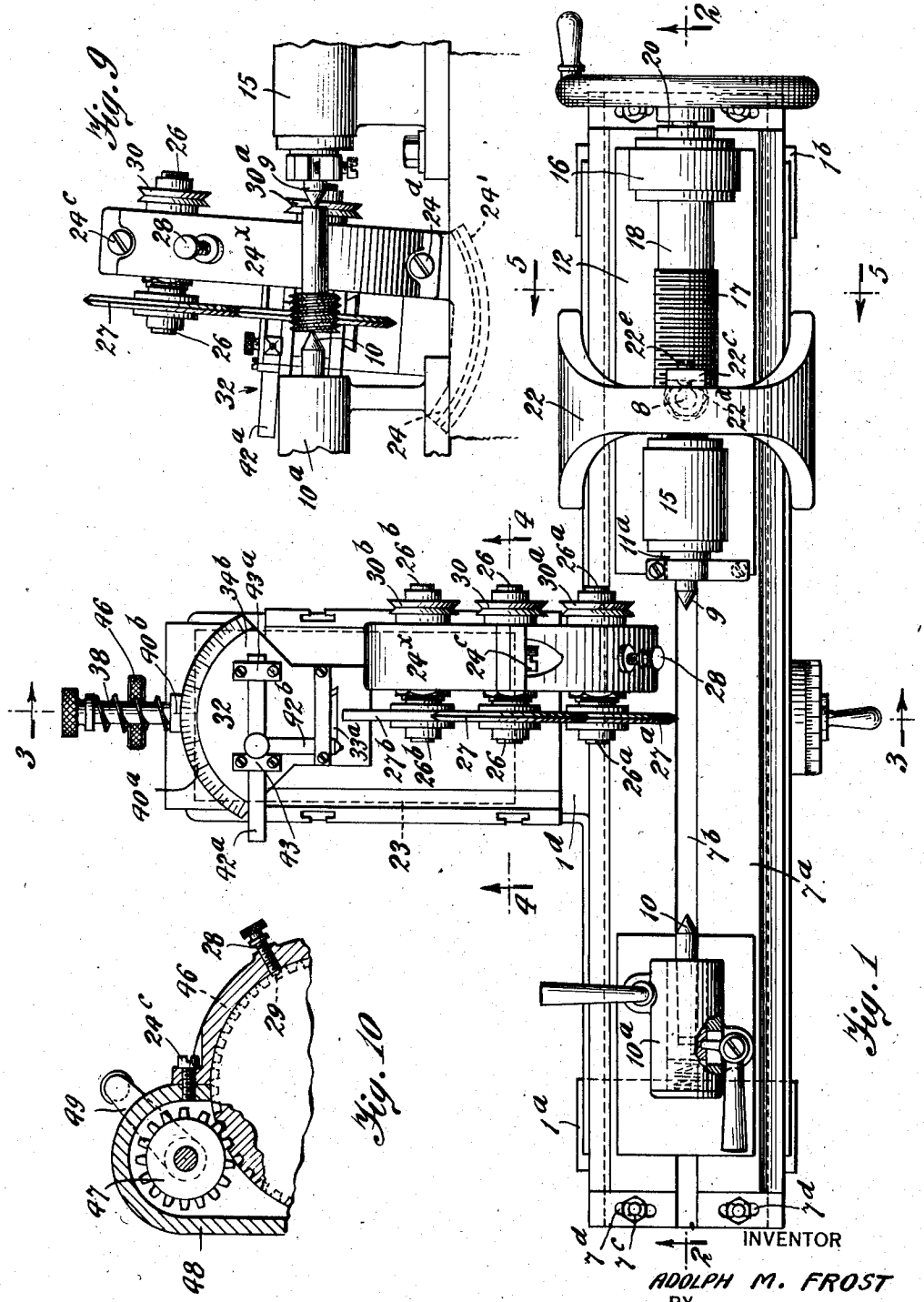

INVENTOR
ADOLPH M. FROST
BY
Joseph F. O'Brien
ATTORNEY

Mar. 3, 1925. 1,528,188

A. M. FROST

THREAD GRINDING MACHINE

Original Filed Sept. 7, 1918 6 Sheets-Sheet 2

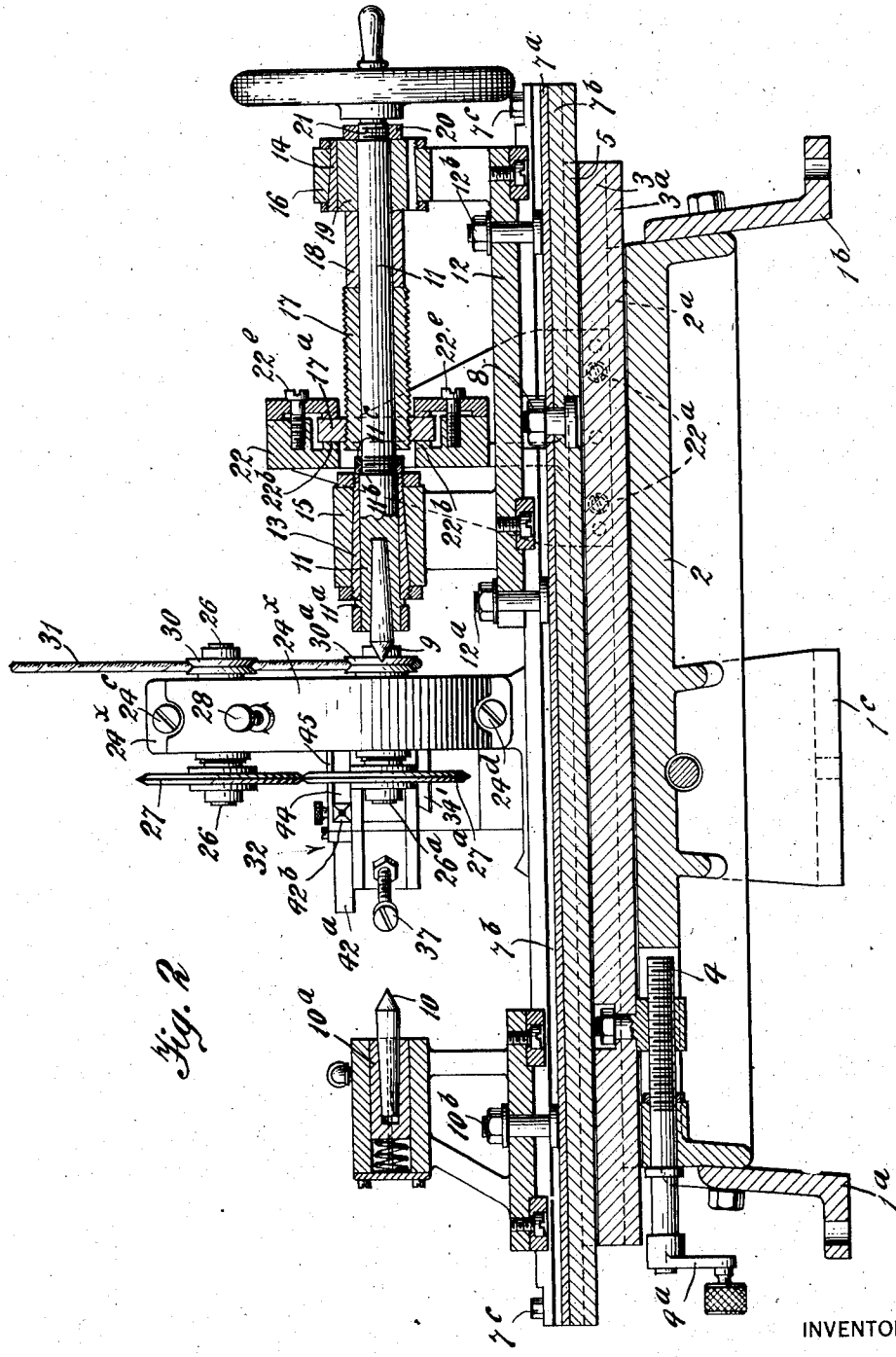

Fig. 2

INVENTOR

ADOLPH M. FROST

BY

Joseph F. O'Brien

ATTORNEY

Mar. 3, 1925. 1,528,188

A. M. FROST

THREAD GRINDING MACHINE

Original Filed Sept. 7, 1918 6 Sheets-Sheet 3

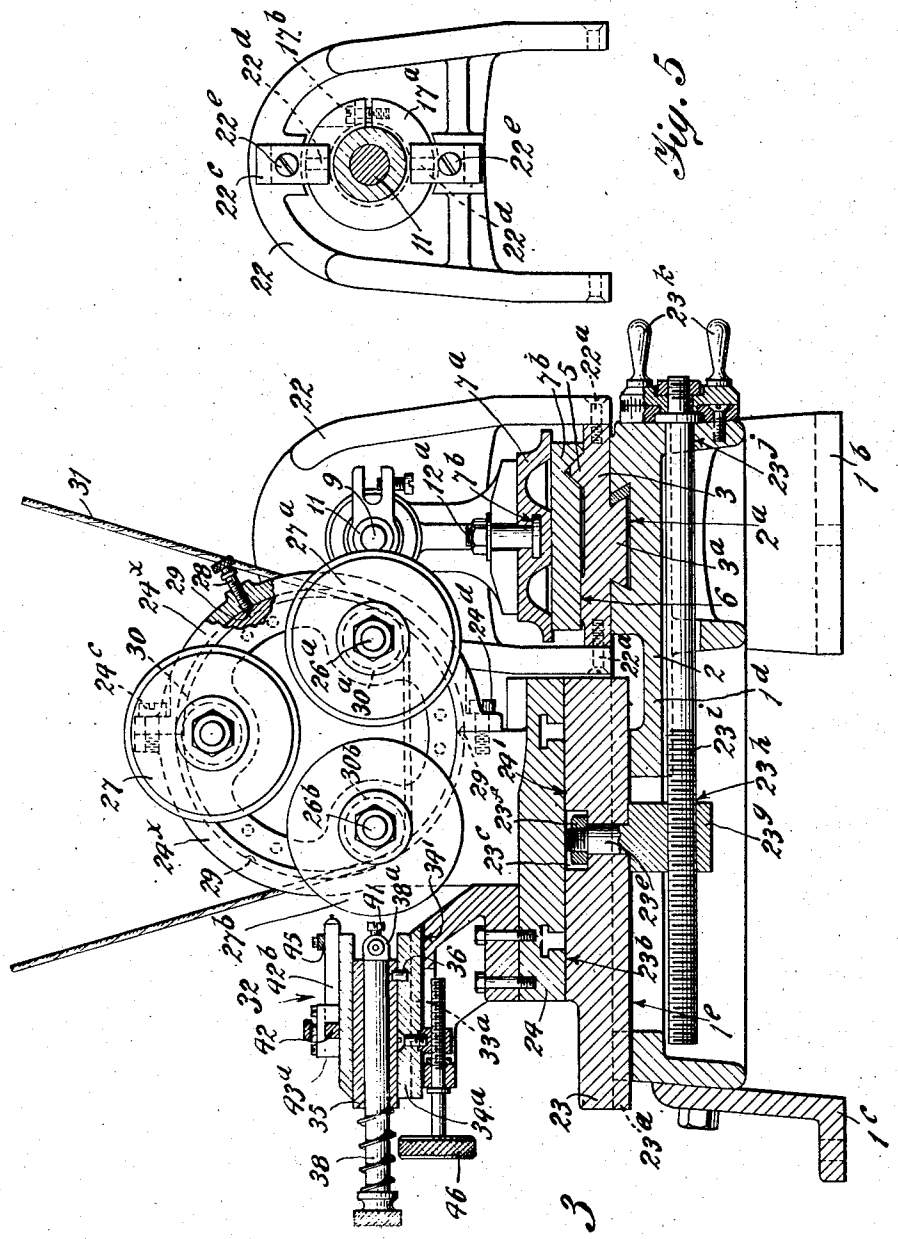

Fig. 5

Fig. 3

INVENTOR

ADOLPH M. FROST

BY

Joseph H. O'Brien

ATTORNEY

Mar. 3, 1925. 1,528,188

A. M. FROST

THREAD GRINDING MACHINE

Original Filed Sept. 7, 1918 6 Sheets-Sheet 4

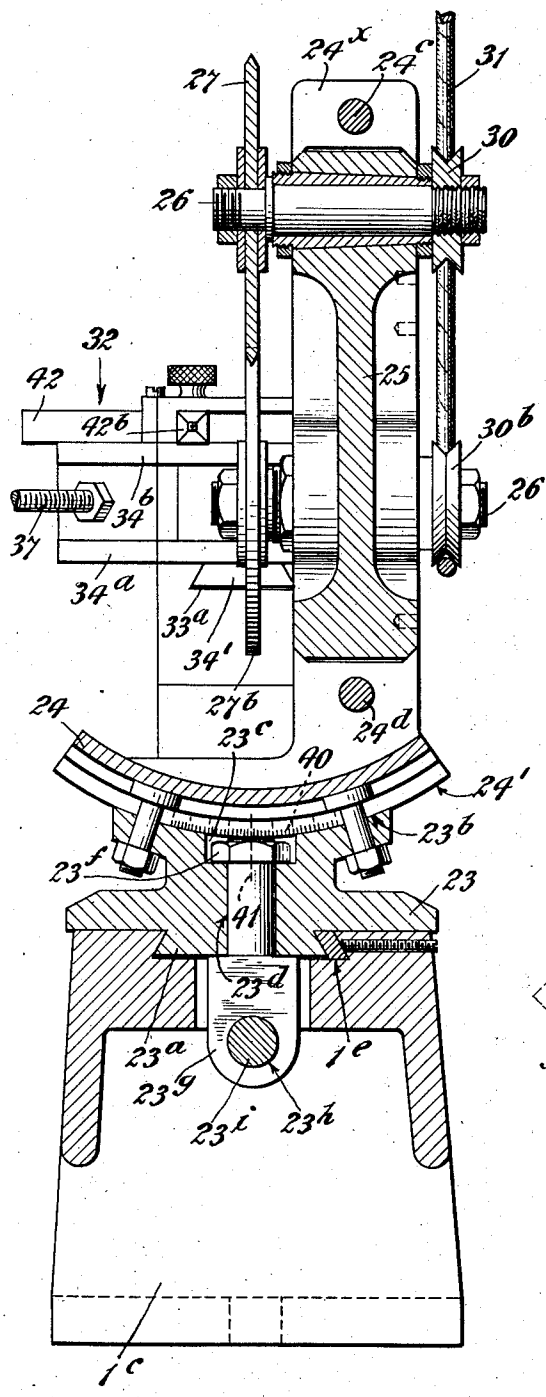

Fig. 4

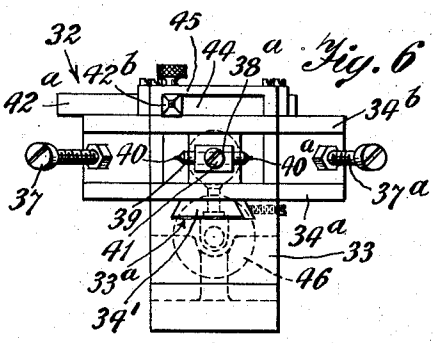

Fig. 6

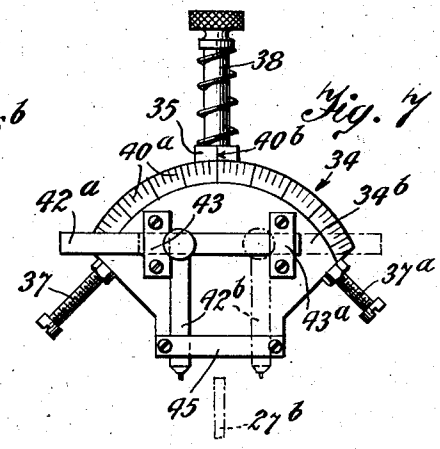

Fig. 7

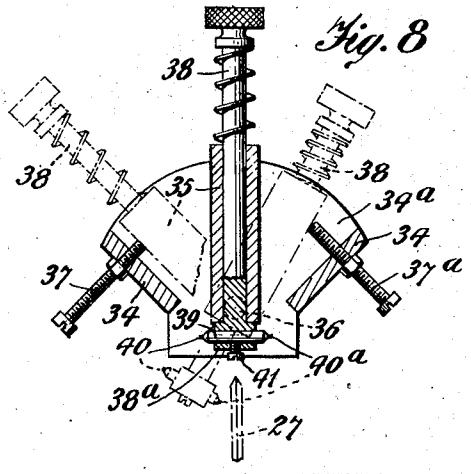

Fig. 8

INVENTOR
ADOLPH M. FROST
BY
Joseph F. O'Brien
ATTORNEY

Mar. 3, 1925. 1,528,188

A. M. FROST

THREAD GRINDING MACHINE

Original Filed Sept. 7, 1918 6 Sheets-Sheet 5

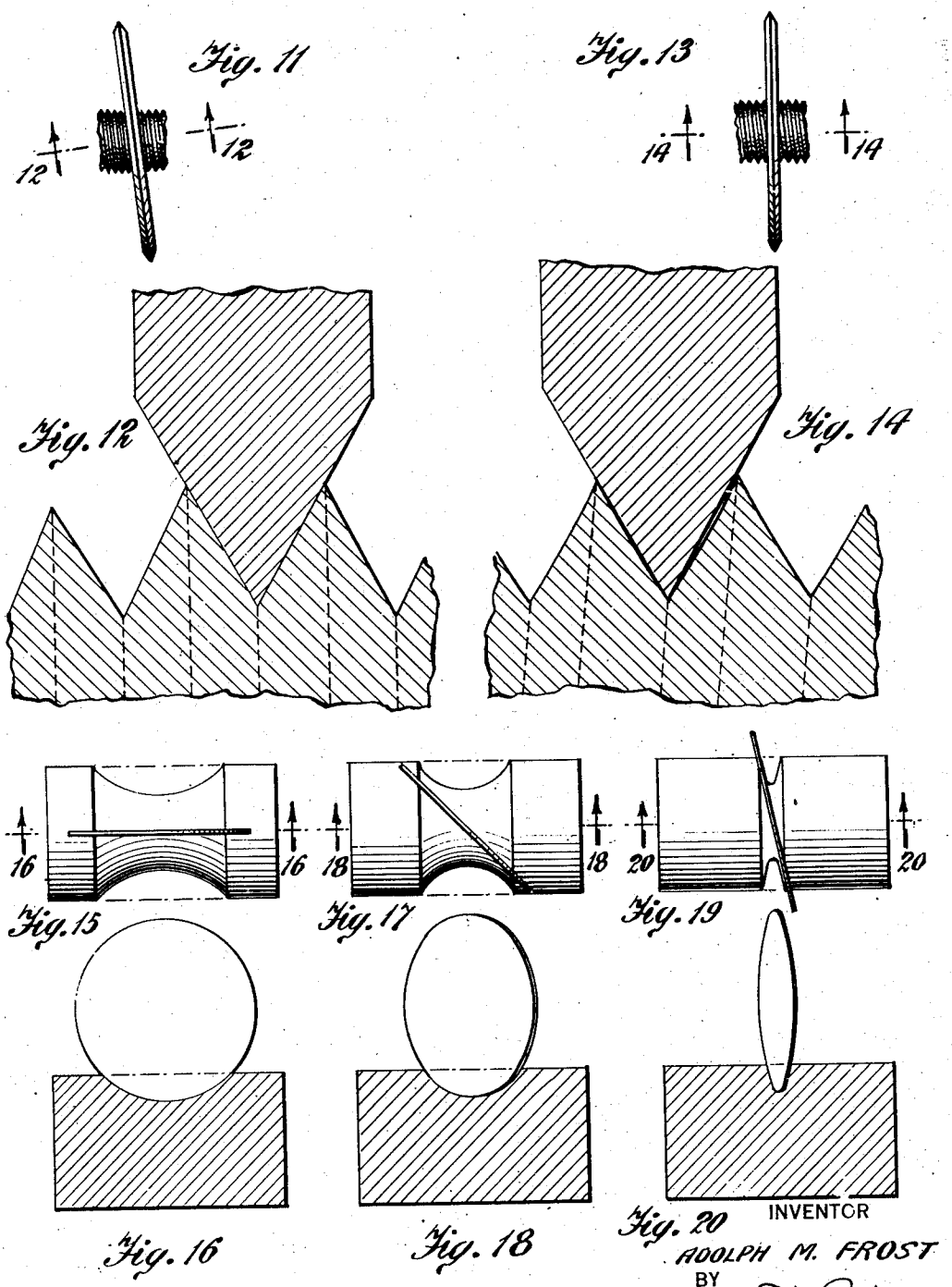

INVENTOR
ADOLPH M. FROST
BY
Joseph F. O'Brien
ATTORNEY

Mar. 3, 1925. 1,528,188

A. M. FROST

THREAD GRINDING MACHINE

Original Filed Sept. 7, 1918 6 Sheets-Sheet 6

Fig. 21

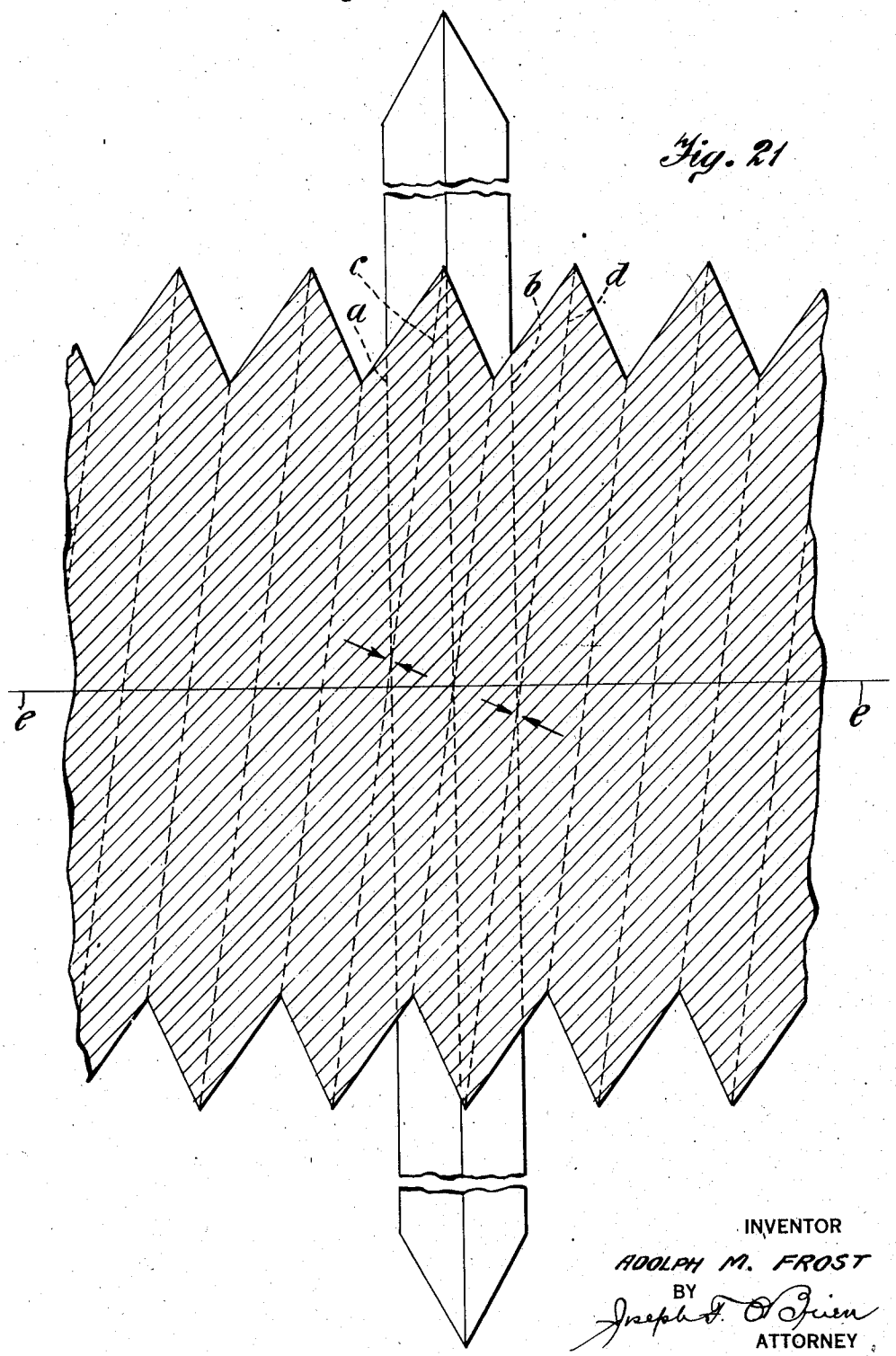

INVENTOR
ADOLPH M. FROST
BY
Joseph F. O'Brien
ATTORNEY

Patented Mar. 3, 1925. 1,528,188

UNITED STATES PATENT OFFICE.

ADOLPH M. FROST, OF BROOKLYN, NEW YORK, ASSIGNOR TO JOSEPH F. O'BRIEN, OF WEST NEW YORK, NEW JERSEY.

THREAD-GRINDING MACHINE.

Application filed September 7, 1918, Serial No. 253,048. Renewed July 28, 1924.

To all whom it may concern:

Be it known that I, ADOLPH M. FROST, a resident of Brooklyn, in the county of Kings and State of New York, have invented certain new and useful Improvements in Thread-Grinding Machines, of which the following is a specification.

This invention relates to improvements in thread-grinding machines.

The primary object of this invention is to produce a machine which may be set to grind threads with great precision or trueness, and thus to substantially eliminate lapping after grinding.

Another object of this invention is to permit the swinging or swiveling of the thread-grinding wheel laterally to cause the axis of said wheel to assume any desired degree of inclination with respect to the work center or axis of the work, and such wheel is preferably swung in an unchanging vertical plane about a point in a horizontal line intersecting its axis and the axis of rotation of the machine or work center. This enables the procurement of precise alignment or parallelism of the grinding V of the wheel with any given lead of the thread, whereby all torsional strain on the grinding wheel is eliminated, the chipping off of point of the V of such wheel is prevented and precise grinding of the thread without leaving any limits for lapping may be procured.

Another object is to enable the operator to use successively each of a series of grinding wheels which usually comprise a hard V-wheel and a soft V-wheel for thread grinding, and a flat wheel for diameter grinding, without the remounting of any of such wheels, thus economizing labor.

Still another object of my invention comprises the utilization of a plural mounting of wheels, these wheels being mounted on a common support or carrier rotating on a common center in combination with wheel dressing means, whereby one of such wheels may be used to grind a thread while another wheel is being dressed to proper V-shape simultaneously with the grinding operation.

Still another object of my invention comprises the use of a compound plate adapted to swing the axis of work laterally in relation to the grinding wheel to enable the initial adjustment of the parts of the machine in true alignment with each other.

Still another object of my invention comprises the use of a series of master lead screws of varying pitches to procure correspondingly correct leads.

Such correct leads will, of course, have varying inclinations corresponding to the diameter of the work and the pitch of the master lead screw, and will thereby be enabled to meet all requirement for the varying pitches and leads.

Still another object of my invention comprises the employment in combination with a suitable master-lead-screw of a stationary bearing-bracket and nut mounted to permit said lead-screw to be rotated in opposite directions and thus to control the thread-grinding in opposite directions, and to eliminate all lost motion whereby grinding in both directions is permitted.

In the accompanying drawings in which similar reference characters designate corresponding parts throughout the several views,

Fig. 1 is a plan view of a machine embodying my invention;

Fig. 2 is a section on the line 2—2 of Fig. 1;

Fig. 3 is a section on the line 3—3 of Fig. 1;

Fig. 4 is a section on the line 4—4 of Fig. 1;

Fig. 5 is a section on the line 5—5 of Fig. 1;

Fig. 6 is a side view of a wheel-dressing mechanism embodied in my machine;

Fig. 7 is a top or plan view of said dressing mechanism;

Fig. 8 is a section illustrating the plunger of said dressing mechanism for cutting the V on the grinding wheel;

Fig. 9 is a side elevation of the work centers, the work, and grinding wheel showing the working positions of the parts;

Fig. 10 is a detail of modified means for setting the grinding wheels in suitable positions;

Figs. 11 to 21 graphically illustrate various positions of a grinding wheel in relation to the work and to the cut or groove which it is making.

In the preferred embodiment of my invention the grinding wheels are fixed against axial movement longitudinally of the machine, the work being caused to travel longitudinally relatively to such fixed wheels; the wheels, however, having the

usual sliding movement at right angles to the work to give depth to the thread ground thereby.

Referring now to these drawings, 1 indicates a suitable supporting frame or base which, in the preferred embodiment shown in these drawings, is T-shaped in conformation, having legs 1^a, 1^b and 1^c respectively and a base 2, provided with a dovetail groove 2^a. Suitably supported on the base 2 to move longitudinally is a base plate 3 having the usual depending dovetail 3^a, cooperating with the groove 2^a, and movable longitudinally by means of a feed screw 4 having crank-handle 4^a. The base plate 3 is provided on its upper surface with a sliding rib 5 and a sliding surface 6 on which is mounted a compound travelling plate 7, comprising a top plate 7^a and a bottom plate 7^b bolted together by bolt 8 about which the plate 7 may be swung pivotally and fixed in suitable relative positions by set screws 7^c cooperating with slots 7^d in the top plate, for a purpose to be hereinafter set forth.

The plate 7^a carries working centers 9 and 10, the working center 9 being mounted in a shaft or working spindle 11 rotatably mounted in a head 12 on adjustable taper bearings 13 and 14 in the head brackets 15 and 16 respectively which as shown are keyed to the plate 7^a by bolts 12^a 12^b having their heads slidable in a T-slot 7^b in the top plate 7^a, and the working-center 10 being mounted in the usual tail stock 10^a which is keyed in the slot 7^b by bolt 10^b.

The spindle 11 is securely held against axial movement in relation to the bracket 15 by means of a shoulder 11^a at its forward end and set nuts 11^b, 11^c which firmly lock the spindle against such axial movement. Said spindle 11 projects rearwardly through an opening in the bearing 14 through which opening a changeable master lead-screw 17 is slid on said spindle and locked in place thereon by means of collars 18 and 19, the collar 18 serving as a spacing member to permit variation in the length of lead-screws to be employed, and the spindle-collar 19 serving to fill out the space or opening intermediate the bearing and spindle. The master lead screw 17, spacing collar 18 and spindle-collar 19 are securely locked together by nut 20 meshing with screw thread 21 on the spindle 11.

Meshing with the thread of the master-lead-screw 17 is a nut 17^a which is in the form of a split nut having means such as the set-screw 17^b for adjusting its diameter to snugly fit the master-lead-screw 17. This nut 17^a is retained in fixed position relatively to the head 12 by a lead-bracket 22 which is fastened at its base to the base plate 3 by screws 22^a. Said bracket 22 preferably is open from the rear to permit the insertion of the nut 17^a against hardened half-round contact points 22^b and are clamped from the rear by clamp-plate 22^c which also have hardened half round contact points 22^d and are fastened to the bracket 22 by screws 22^e. This mounting of the nut 17^a effectually prevents any axial movement of such nut.

Obviously this arrangement permits rotation of the lead-screw in the nut to allow the said master lead-screw 17 to move axially therethrough, thus controlling the lead of the work, and the half round contact points permit the swinging of the top member 7^a of the compound plate on the bolt 8 to procure initial adjustment of the parts of the machine in true alignment with each other.

A leg 1^d of the T-shaped base 1 is disposed at a right angle to the center line of the work, and is provided with a dovetail groove 1^e. Mounted upon the leg 1^d of the said base is a sliding base 23 having a dovetail 23^a sliding within the dovetail groove 1^e and a swivel surface 23^b upon which surface is mounted a swivel-platform 24 having a swivel surface 24^1 cooperating with the base surface 23^b. Upon the platform 24 which is adapted to swivel on the surface 23^b about the center of the work, is mounted a grinding wheel frame 24^x.

As illustrated, said frame 24^x is made in two equal semi-circular parts which are locked together at top and bottom by screws 24^c, 24^d and together form a socket bearing for the periphery of a carrier wheel 25 upon which is mounted, on suitable shafts 26, 26^a and 26^b carried by such carrier wheel, a series of grinding wheels 27, 27^a, and 27^b adapted to be alternately swung about the axis of the carrier wheel 25, and each of these wheels may be locked in grinding position by means of a set-screw 28 which seats within depressions 29 in the carrier wheel 25.

When so locked in grinding position the axis of the two lower wheels of the series will be in horizontal alignment with the center line of the work.

It is apparent with the arrangement just described that one of the grinding wheels may be brought into grinding contact with the work to procure depth of thread cut, and furthermore that when the platform 24 is swiveled on the surface 23^b in a vertical plane parallel with the axial line of the work, the grinding wheel may be set to correspond with the incline or angularity of the lead as controlled by the master-lead-screw 17 and when the grinding wheel is thus set it will always remain in parallelism with the said lead and in the grinding of a thread on the work the V of the wheel will contact with the walls of the thread V in precise parallelism with the lead and at

an inclination to the center line of the work in the same proportion that the lead is so inclined.

The shafts 26, 26ᵃ, 26ᵇ, are provided at the opposite side of the bracket 24 with V-bottom wheels 30, 30ᵃ, 30ᵇ, by means of which such shafts may be rotated or driven from any suitable source of power (not shown) by a suitable belt 31 which, as shown, engages two of such wheels so as to drive the same simultaneously and thus to permit one of the two wheels so driven to be employed in grinding while the other is being prepared or dressed for the next grinding operation. This is, as illustrated, accomplished by mounting a wheel dresser 32 at the side of the carrier wheel 25. This wheel-dresser, as shown, is mounted on the swivel platform 24 to cause it to be moved with and to be retained in the same relation to the grinding wheels at all times so that one wheel may be dressed without removal from its mounting while the other wheel is employed for grinding the work. The dresser illustrated comprises a dresser base 33 having a dovetail groove 33ᵃ which cooperates with a dovetail 34′ on a dresser housing 34 to permit movement of the dresser toward and away from the axis of the grinding wheels to compensate for the wearing of such wheels.

The housing 34 is provided with guiding side-walls 34ᵃ 34ᵇ between which is mounted a swinging plunger-guide 35 pivoted on a pivot-pin 36 and adapted to be swung to any suitable angularity from the perpendicular and to be set in proper relationship thereto by means of set screws 37—37ᵃ at the opposite sides of the guiding walls 34ᵃ 34ᵇ. Mounted to slide in the plunger guide 35 is a spring-retracted plunger 38 which has a head 38ᵃ at its lower end. This head has a suitable base into which is fitted a diamond-retainer or holder 39 having diamonds 40 40ᵃ at opposite ends and being suitably set by a set screw 41. This is the conventional dresser but it is mounted, as aforesaid, on the swivel platform and is adapted to be moved therewith. Obviously with this arrangement a grinding wheel may be dressed to any suitable angularity.

When, however, the wheels are arranged in true parallelism with the lead, the cut of the dressing of opposite sides of the V of such wheels will always be equal at opposite sides of a perpendicular to the lead as no allowances for tolerance is necessary, this V will always correspond with exactness to the requirements of the thread to be cut in the work. It is, therefore, desirable to indicate the degree of cut or dressing of such wheels and for this purpose, I have provided a scale 40ᵃ on the wall 34ᵇ of housing 34 which may be employed to coact with a mark 40ᵇ on the plunger guide 35.

Now, it will be clear that when a thread is ground by a wheel maintained in a plane perpendicular to the axis of the work, the V of the grinding wheel must be varied in accordance with the variation of the inclination of the lead to the axis of the work whether this inclination be due to a variation in the pitch of the thread required to be ground or to a variation in the diameter of different threads of the same pitch with the same angularity of V. In either case, the greater the inclination of the lead line from a perpendicular to the center of work, the more acute the angle of the V of the grinding wheel must be and the greater the inclination of the lead the greater provision must be made for tolerance or clearance between the wall of the thread channel and the grinding V. It will also be seen that in such case because of such angularity or inclination of the lead to the center of the work, that the opposite surfaces of the grinding V of the grinding wheel must be of unequal degrees of angularity in order to approximate a sixty degree cut or V in the work.

In Fig. 21 I have illustrated, in magnified form, a grinding wheel, disposed in a plane perpendicular to the axis of the work, grinding a thread V of a conventional pitch in a piece of work of usual diameter, and I have indicated by arrows the points of intersection of the edges *a*, *b*, of the grinding V of the wheels with the edges *c*, *d*, of the thread channel, and it will be noted that these points of intersection are at appreciable distances on opposites of the line *e*, representing the axis of the work, and it will be apparent that the clearance or tolerance necessary in the case illustrated will be equal to the space between the lines *a* and *c* at the axis *e* on one side of the grinding wheel and the space between the lines *b* and *d* at the axis *e* on the opposite side thereof. In any event, where a grinding wheel is grinding a thread having a lead which runs at any angle but a right angle to the plane of rotation of such wheel, a curved cut will result in the work, the degree of curvature being in proportion to the degree of angularity of the lead to said plane of rotation. I have illustrated all of this graphically in Figs. 11 to 20. Thus in Figs. 15 and 16, I have shown a grinding wheel disposed parallel to the axis of the work and its cut; in Figs. 17 and 18 I have shown the same at an angle to the axis of the work and in Figs. 19 and 20 a grinding wheel is shown at still a greater angle to the axis of the work. In Figs. 13 and 14, I have shown how a grinding wheel disposed in a plane perpendicular to the axis of the work cuts a slightly elliptical V or channel in the work.

Because it has been necessary heretofore to have certain limits of tolerance, it has been impossible to procure a perfect given degree of V in the work by grinding and

furthermore it has always been necessary to lap the V's of the thread after grinding the same and to gauge the same repeatedly in order to obtain approximate accuracy. By my invention I am enabled to eliminate this lapping and can grind to the precise given degree of V by simply varying the degree of swiveling motion of the grinding wheel to correspond exactly in inclination with any variation from the aforesaid perpendicular to the axis of the work which may be caused by a predetermined lead, or in other words, to cause the plane of rotation of the grinding wheel to be parallel with the lead, see Figs. 11 and 12. Obviously when the grinding wheels are so swiveled in relation to the perpendicular, the degree of inclination may be indicated on a suitable scale, and I have provided a scale 40 for this purpose near the bottom of the swivel surface which coacts with a mark 41 indicating the perpendicular on the base 23.

Now, having the degree of inclination of the lead to the perpendicular marked on the scale 40, I am enabled immediately to set the dressing diamonds of the wheel-dresser at the proper angle to cut the grinding V of the wheel in accordance with requirements as to angularity of the V of the thread to be ground, and this V will be so ground with precision and without tolerance simply by the use first of a hard grinding wheel, and second by the use of a soft grinding wheel and without the necessity of lapping. After such grinding of the V of the thread to its proper depth, the work may be ground down to the proper outer diameter by the flat wheel 27^b. This wheel, as shown, is dressed by means of a diamond carrier 42 having a horizontally extending arm 42^a guided in ways 43 43^a screwed on the side of the dresser housing 34 and another arm 42^b extending at a right angle to the arm 42^a guided in a slot 44 formed by the slide guide 45. I thus produce a combined dresser for the wheel with the flat working face and for the wheels with the V working faces, which may be fed forwardly with a single feeding screw 46.

In order to move or slide the swivel base back and forward in relation to the center line of the work for the purpose of permitting operation on work pieces having varying diameters and depth of grinding V, I provide in the swivel base 23 a socket 23^c and a bore 23^d through which extends a screw 23^e having a nut 23^f in the socket 23^c and a head 23^g provided with a horizontal threaded bore 23^h which meshes with a screw shaft 23^i bearing at 23^j in the base of the machine and having a conventional feed collar 23^k.

If desired the wheels may be moved into their alternate grinding and dressing positions by providing the periphery of the wheels with gear teeth 46 and by mounting a pinion 47 in an extension of the housing 48 which pinion is rotated by a crank handle 49. When the wheels are moved into proper position by the crank and pinion, they are locked in such position by a set screw 28 in the same manner as hereinbefore described.

Having described my invention, I claim:

1. A thread-making machine embodying, in combination, suitable work-centering means, pitch-determining means, a thread-making wheel rotating about a suitable axis, means for swinging the axis of said wheel about an axis which is radial to the work center, and means for moving the said wheel toward and away from the work parallel to said radial axis.

2. A thread-making machine embodying, in combination, suitable work-centering means, pitch-determining means, and a thread-making wheel rotating about a suitable axis; means for swinging the axis of said wheel about a horizontal axis which is radial to the work center; and means for moving the said wheel toward and away from the work in a line parallel to said radial axis.

3. A thread-grinding machine embodying, in combination, suitable work-centering means, pitch-determining means associated with said work-centering means, a thread-grinding wheel rotating about a suitable axis; and means for swinging the axis of said grinding-wheel about a fixed axis which is radial to the work-center; and means for moving the grinding-wheel toward and away from the work in a line parallel with said radial axis.

4. A thread-grinding machine embodying suitable work centering means, pitch-determining means, a series of grinding wheels movable about a common center and adapted to be moved successively into grinding position, shafts for each of said wheels, means for rotating said wheels on said shafts, means for swinging the said grinding wheels laterally about an axis which intersects the axis of one of such grinding wheels when in grinding position and is radial to the work center and means for moving said wheels toward and away from the work.

5. A thread-grinding machine embodying work-centering means, pitch-determining means, a swivel-base slidable at a right angle to said work-centering means, a platform swiveled on said base, a grinding wheel mounted on said platform, the said platform being arranged to swing about an axis which intersects the axis of the grinding-wheel when in grinding position and extends radially of the work.

6. A thread-grinding machine embodying, in combination, suitable work-centering

means, a removable master-lead-screw associated with said work centering means; means for causing said screw to control the lead of the work; a thread-grinding-wheel rotating about a suitable axis and means for rotating the axis of said grinding-wheel about an axis which is radial to the work center.

7. A thread-grinding machine embodying, in combination, suitable work-centering means, a series of interchangeable master lead screws of varying pitches, a mounting associated with the work centering means and adapted to permit interchanging of said screws; a thread-grinding wheel rotating about a suitable axis; means for rotating the axis of said grinding-wheel about an axis which is radial to the work center; and means for moving the grinding-wheel toward and away from the work along said radial axis.

8. A thread-grinding machine embodying suitable work-centering means, pitch-determining means, a thread-grinding wheel rotating about a suitable axis and means for swinging said wheel laterally about an axis located within planes bounding the sides of the wheel and which is radial to the said center of the work.

9. A thread-grinding machine embodying suitable work-centering means, pitch-determining means, a thread-grinding-wheel rotating about a suitable axis and means for swinging said wheel axially about an axis located within planes bounding the sides of the wheel and which intersects the axis of revolution of the wheel at substantially a right angle.

10. A thread-grinding machine embodying suitable work-centering means, pitch-determining means, a thread-grinding wheel rotating about a suitable axis and means for swinging said wheel axially about an axis which is radial to the said wheel and which is also radial to the work.

Signed at the borough of Manhattan, New York city, in the county of New York and State of New York, this 5th day of September A. D. 1918.

ADOLPH M. FROST.

Witnesses:
JULIUS M. LUTZ,
WM. C. WOLF.