Jan. 12, 1932. E. H. RYDEN ET AL 1,841,211

THERMOSTATICALLY CONTROLLED VALVE FOR AIR AND GAS MIXERS

Filed Dec. 19, 1929 2 Sheets-Sheet 1

Fig. 1.

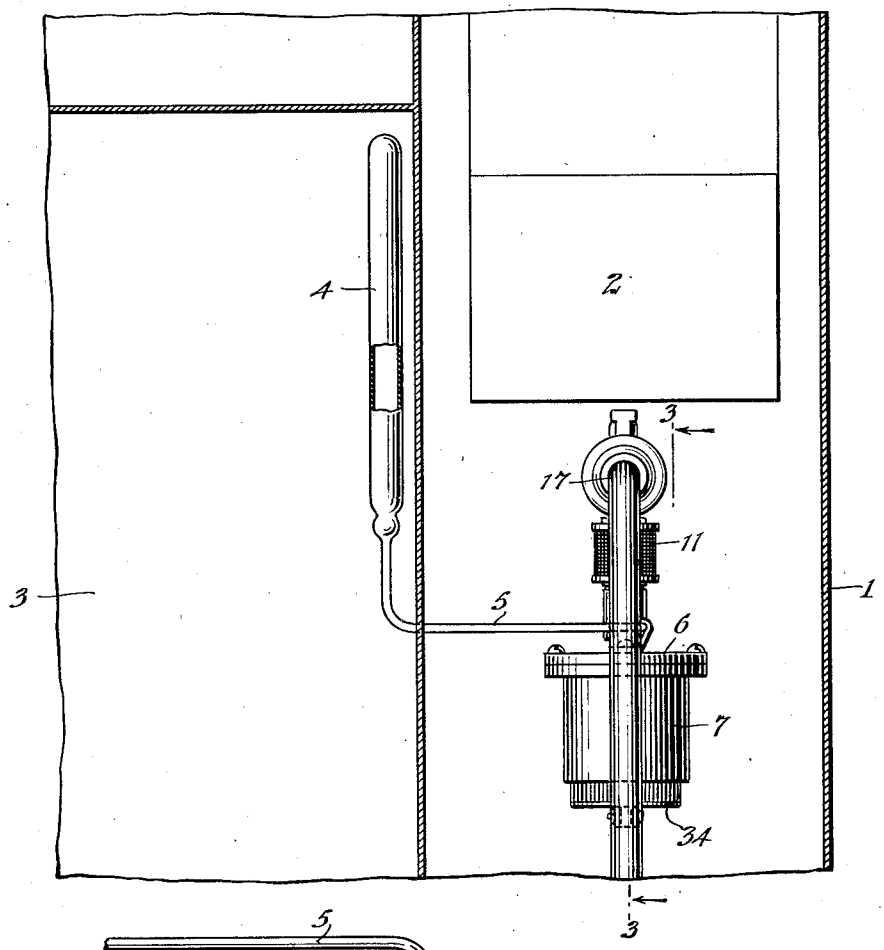


Fig. 2.

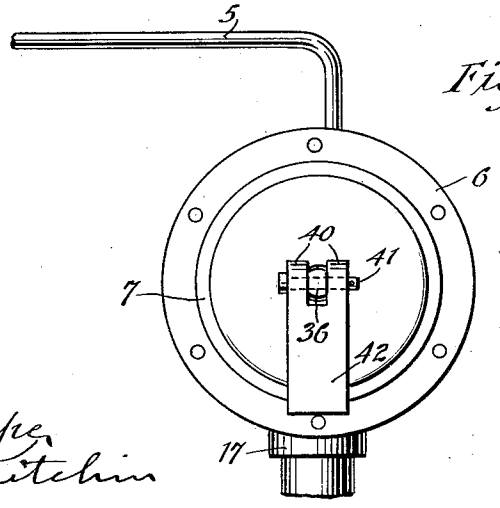


WITNESSES
Edw. Thorpe
A. L. Kitchin

INVENTORS
E. H. Ryden
W. S. Walker
BY Munn & Co
ATTORNEYS

Jan. 12, 1932. E. H. RYDEN ET AL 1,841,211

THERMOSTATICALLY CONTROLLED VALVE FOR AIR AND GAS MIXERS

Filed Dec. 19, 1929 2 Sheets-Sheet 2

Fig. 3.

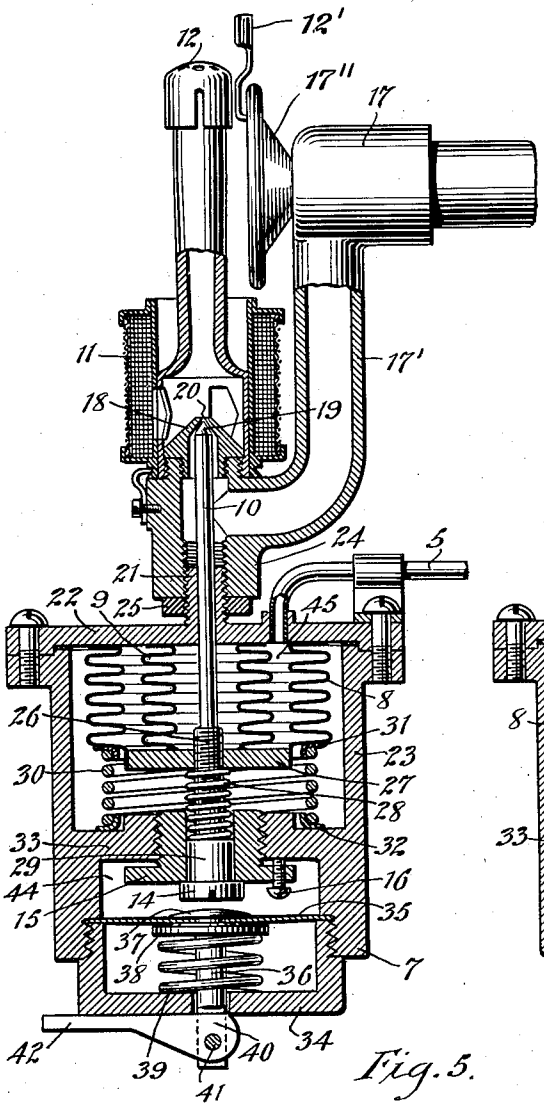


Fig. 4.

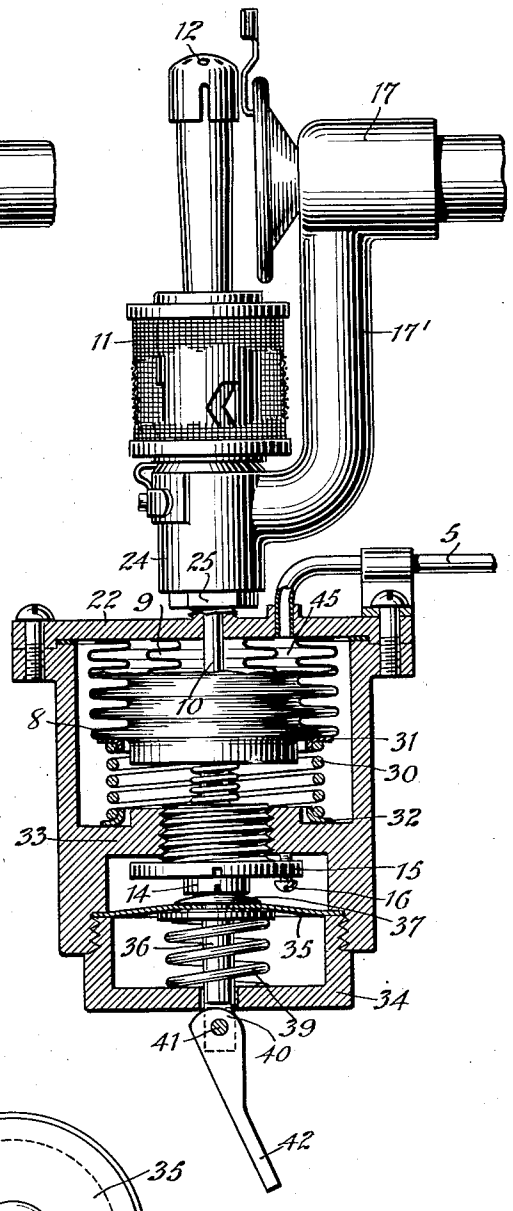


Fig. 5.

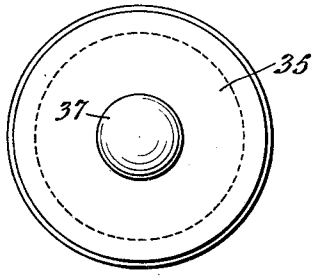


WITNESSES

Edw. Thorpe

A. L. Kitchin

INVENTORS

E. H. Ryden

W. S. Walker

BY Munn & Co.

ATTORNEYS

Patented Jan. 12, 1932 1,841,211

# UNITED STATES PATENT OFFICE

ERIC H. RYDEN AND WOODS S. WALKER, OF NEW YORK, N. Y., ASSIGNORS TO CONSOLIDATED GAS COMPANY OF NEW YORK, OF NEW YORK, N. Y., A CORPORATION OF NEW YORK

## THERMOSTATICALLY CONTROLLED VALVE FOR AIR AND GAS MIXERS

Application filed December 19, 1929. Serial No. 415,310.

This invention relates to a control mechanism for the valve of an air and gas mixer, and has for an object to provide an improved construction wherein a structure is provided which thermostatically controls the valve of an air and gas mixer, whereby a supply of mixed air and gas may be regulated to suit any given condition.

Another object of the invention is to provide a thermostatically controlled needle valve for air and gas mixers, the parts being so arranged that the valve may be set manually and then a thermostatic part of the device set to function either to regulate the supply of air and gas or to shut off most of the gas when the thermostatic part has functioned to its fullest extent.

A further object of the invention is to provide a thermostatically controlled needle valve for the air and gas mixer used in connection with refrigerators or refrigerating units, the structure being such that when the temperature is raised to a certain extent the valve will be opened automatically and when the temperature is lowered to a certain extent the valve will be automatically moved to an almost closed position.

An added object is to provide a control device for the flame of gas burners used in gas refrigerators, the structure being such that the gas is thermostatically turned on and off, but when turned off is allowed a certain flow to maintain a pilot light.

In the accompanying drawings,—

Figure 1 is a fragmentary sectional view through a refrigerator with a thermostatically controlled valve shown in connection therewith;

Figure 2 is a bottom plan view of the valve and associated parts shown in Figure 1, the same being on an enlarged scale;

Figure 3 is a sectional view through Figure 1 approximately on the line 3—3, the same being on an enlarged scale;

Figure 4 is a view similar to Figure 3 but showing the parts in a differently adjusted position;

Figure 5 is a plan view of the gas seal and manual control for the valve providing certain features of the invention.

Referring to the accompanying drawings by numerals, 1 indicates a refrigerator of any desired kind. The refrigerator 1 is designed to have a cooling system 2 of any desired kind which may be operated by heat. The chamber 3 in the refrigerator 1 is the usual chamber in which articles to be kept cool are maintained, and in this chamber the container or large tube 4 is mounted. A comparatively small pipe 5 is connected to the lower end of container 4, said pipe extending to the top plate 6 of the control mechanism 7. The container 4 is air-tight but is in free communication with pipe 5, and this pipe and container is filled with liquid or gas, which gas also fills the space between the diaphragms 8 and 9 forming a bellows which is adapted to automatically actuate the needle valve 10. The device has been shown in connection with a refrigerator, but it is evident that it may be used in connection with other devices where variation of temperature occurs. A needle valve has been shown in Figure 3, but it will be evident that the device could be used with other forms of valves without departing from the spirit of the invention.

As shown in Figure 3, the parts are set so that when the temperature of container 4 is comparatively high a full flow of gas will pass the valve 10 and mix with air passing through the screen and finally pass out the burner 12. When the temperature of container 4 is lowered to a certain extent the gas or chemicals therein will be contracted, and consequently, the spring 13 is permitted to collapse to a greater or less extent the bellows 8 and 9 and thereby close valve 10, but this closing action is limited by the fact that the enlargement or head 14 strikes the member 15 which acts as an abutment. This abutment is a threaded sleeve, as shown in Figure 3, and may be rotated so as to hold the valve 10 open, even if the spring 30 would otherwise close the same. After the parts have been adjusted the locking screw 16 is screwed down tight, so that the abutment will not shift as the remaining parts function. In this way a full flow of gas may be had when necessary, and when the gas is not necessary

the valve may be closed, except for a sufficient amount of gas to maintain a pilot flame on the burner 12. For gas refrigerators this is very desirable, as a full flame may be secured at any time without the necessity of again lighting the burner. The burner 12, the thermostatically-controlled valve 17, pipe 17′ and air mixer 11 are old and well-known and form no part of the present invention, except in combination. The valve 17 is opened and closed by a thermostat 17″ which carries a guard 12′ whereby flames from the burner 12 will not appreciably act on the rear part of the thermostat. A valve seat 18 is arranged adjacent the air mixer 11, and the pointed end 19 of valve 10 coacts therewith to regulate the flow of gas through the orifice 20. The valve 10 has been indicated as a needle valve because it is the most desirable for a comparatively small burner. If a large flow of gas is to be controlled and mixed with air the valve could be made of some other type and connected up as shown, for instance, in Figure 3, without departing from the spirit of the invention. Valve 10 is slidably mounted in a sleeve 21 which is preferably integral with the top plate 22 of the casing 23. The internally-threaded extension 24 of pipe 17′ is screwed onto the sleeve 21 and is locked in a desired position by the lock nut 25. This lock nut or something functioning to the same effect is necessary in order that the valve seat 18 may be rigidly held in a given position, whereby the movement of the valve 10 will regulate the flow of gas, as desired. The valve 10 near the lower end is provided with a threaded portion 26 which is screwed into the plate 27 secured to the lower end of the bellows 8 and 9, and spring 28 acts on this plate and on the large end 29. A spring 30 acts on the washer 31 carried at the lower end of bellows 8 and on the washer 32 carried by the division wall 33. The stop or abutment 15 is screwed into a threaded aperture in division wall 33 and is normally locked against rotation by the screw 16. The enlargement 29 of valve 10 is provided with a kerf, as shown in Figure 3, whereby through the use of a screwdriver or some other instrument the valve 10 may be adjusted so that the distance between point 19 and plate 27 may be varied. A bottom cap 34 is screwed onto the lower end of casing 23 and pinches a comparatively flat diaphragm 35. A pin 36 extends through diaphragm 35 and is formed preferably with a comparatively large head 37 coacting with the washer 38 and spring 39 to deflect or deform the diaphragm when desired, as shown in Figure 4. Pin 36 extends loosely through the cup 34, as shown in Figure 3, and an eccentrically-mounted cam 40 is connected thereto by the pivot 41. The parts are so arranged that when the handle 42 is resting flatwise against the bottom of cup 34 spring 39 will be compressed and head 37 will be held out of contact with the enlargement 29. When handle 42 is moved or swung downwardly from the position shown in Figure 3 to that shown in Figure 4 spring 39 will be released and will immediately deform the diaphragm 35 and press head 37 against the enlargement 29. This will cause the enlargement 14 to press against the abutment 15 unless it is already contacting therewith and thereby hold the pointed end 19 of valve 10 in a certain position in respect to the orifice 20. When the parts are held in this position, as shown in Figure 4, only sufficient gas is allowed to escape through orifice 20 to maintain a fair sized pilot light on burner 12. The inverted cup 34 pinches the diaphragm 35 and produces a gas-tight connection, whereby if any gas leaks past the valve 10 it will be trapped in the chamber 44. In this way a gas-tight structure is produced and at the same time means are presented which will lock or hold the valve substantially closed or closed sufficiently to maintain only a pilot light. It will be evident that the bellows 8 and 9 are resilient, but in order to cause an absolutely positive action a comparatively strong spring 30 is used to move the valve 10 toward a closed position while the pressure of the liquid or gas in the chamber 45 moves the parts in the opposite direction to open valve 10. From Figure 3 it will be noted that the pipe 5 is in free communication with chamber 45 so that when the temperature is raised in the container 4 and pipe 5 pressure will be created, and this will expand the diaphragms or bellows 8 and 9, which will result in opening valve 10 and permitting a larger volume of gas to flow to the air mixer 11 and thence to the burner 12. It will thus be seen that the valve structure is thermostatically controlled and the mixed air and gas may be used in the burner 12 for refrigerators, or in other places. The particular use to which the mixture of air and gas is put forms no part of the present invention, as the present invention relates to the valve structure and the thermostatic control therefor. It also includes the manual control including handle 42 and associated parts, whereby a minimum supply of gas is fed through the discharge orifice 20. It will be noted that the valve is never completely closed, but is only closed to what may be termed a pilot condition, and from this condition it is opened more or less according to the volume of gas needed.

What we claim is:—

1. A thermostatically controlled valve for air and gas mixers, including a valve structure, a thermostat for moving parts of the valve structure so as to open the same, and mechanically actuated means for shutting said valve structure against the action of said thermostat, said means including a diaphragm, a spring for moving the diaphragm

in one direction and a manually actuated cam for moving the diaphragm in the opposite direction.

2. A thermostatically controlled valve comprising a valve body having a seat formed with a discharge orifice through which gas is adapted to pass, a valve member coacting with said seat, thermostatic means for moving said valve member away from said seat, spring means for moving said valve member towards said seat, said spring means functioning when the pressure in the thermostatic means has been lowered to a predetermined point, a spring actuated rod for moving said valve member to a substantially closed position, a manually actuated cam pivotally mounted on said rod and acting against said body for moving said rod to a retracted position whereby the rod cannot function.

3. A control for a valve comprising a thermostat connected with the valve for opening the same, a spring acting in opposition to the thermostat for closing the valve, a pin for moving said valve to a substantially closed position, a flexible diaphragm connected at its edge to said body said pin being rigidly connected to said diaphragm for preventing the escape of gas, said pin extending to a point exteriorly of said body, a spring for moving said diaphragm and said pin for closing said valve and a manually-actuated cam pivotally connected to said pin and acting against said body for moving said pin to an inoperative position and holding the same in said inoperative position whereby said theremostat and the first-mentioned spring may function.

4. A thermostat for a valve including a pair of bellows, one being within the other, said bellows having their ends connected so as to provide a chamber therebetween, with one end connected to the moving part of said valve, means for directing fluid into said chamber for expanding the bellows and moving the same in a direction to cause said moving part to move in one direction for opening said valve, a spring for automatically moving said moving part back when the pressure is removed from said chamber and means for locking said moving part against action by said spring and said bellows.

5. A thermostat for gas valves comprising a bellows structure having a chamber, said bellows structure at one end being connected with said valve, means for directing matter under pressure into said chamber to expand the chamber and thereby move the valve to an open position, a spring acting against said bellows to move said valve to a closed position and an abutment for limiting the movement of the valve toward a closed position so that the valve cannot be completely closed whereby a continuous leakage takes place.

6. A thermostatic valve comprising thermostatically-controlled means for moving said valve to an open position, a spring for moving said valve member toward a closed position, and an adjustable abutment for limiting the movement of said valve toward a closed position, and a lock for locking said abutment against accidental movement.

7. A thermostatic valve comprising a resilient bellows connected with said valve and acting to move the valve to an open position, a spring for moving said valve toward a closed position, said valve having an enlargement at one end, an abutment positioned to be engaged by said enlargement, whereby the movement of said valve toward a closed position is limited, a spring-pressed member for pressing said enlargement against said abutment, said spring-pressed member being more powerful than said bellows, whereby the valve is held almost closed, and a swinging manually actuated cam for forcing said spring-pressed member away from said enlargement.

ERIC H. RYDEN.
WOODS S. WALKER.