(12) INTERNATIONAL APPLICATION PUBLISHED UNDER THE PATENT COOPERATION TREATY (PCT)

(19) World Intellectual Property Organization
International Bureau

(43) International Publication Date
1 November 2001 (01.11.2001)

PCT

(10) International Publication Number
WO 01/82328 A2

(51) International Patent Classification[7]: H01J 37/00

(21) International Application Number: PCT/US01/13576

(22) International Filing Date: 25 April 2001 (25.04.2001)

(25) Filing Language: English

(26) Publication Language: English

(30) Priority Data:
09/557,990 25 April 2000 (25.04.2000) US

(71) Applicant: **APPLIED MATERIALS, INC.** [US/US]; P.O. Box 450 a, Santa Clara, CA 95052 (US).

(72) Inventors: **CARDUCCI, James, D.**; 731 Gail Avenue, Sunnyvale, CA 94086 (US). **NOORBAKHSH, Hamid**; 40327 Canyon Heights Drive, Fremont, CA 94539 (US). **LEE, Evans, Y.**; 2327 Farmcrest Street, Milpitas, CA 95035 (US). **SHAN, Hongqing**; 1369 South Stelling Road, Cupertino, CA 95014 (US). **SALIMIAN, Siamak**; 958 Gerber Court, Sunnyvale, CA 94087 (US). **LUSCHER, Paul, E.**; 1365 Flicker Way, Sunnyvale, CA 94087 (US). **WELCH, Michael, D.**; 1169 Pineto Place, Pleasanton, CA 94566 (US).

(74) Agents: **BERNADICOU, Michael, A.** et al.; Blakely, Sokoloff, Taylor & Zafman LLP, 12400 Wilshire Boulevard, 7th floor, Los Angeles, CA 90025 (US).

(81) Designated States *(national)*: JP, KR.

Published:
— *without international search report and to be republished upon receipt of that report*

For two-letter codes and other abbreviations, refer to the "Guidance Notes on Codes and Abbreviations" appearing at the beginning of each regular issue of the PCT Gazette.

WO 01/82328 A2

(54) Title: MAGNETIC BARRIER FOR PLASMA IN CHAMBER EXHAUST

(57) Abstract: A plasma chamber apparatus and method employing a magnet system to block the plasma within the chamber interior from reaching the exhaust pump. An exhaust channel between the chamber interior and the pump includes a magnet and at least one deflector that creates turbulence in the flow of exhaust gases. The magnetic field and the turbulence produced by the deflector both increase the rate of recombination of charged particles in the gases, thereby reducing the concentration of charged particles sufficiently to quench the plasma downstream of the magnet and deflector, thereby preventing the plama body withinthe chamber from reaching the exhaust pump. The plasma confinement effect of the magnetic field permits the use of a wider and/or less sinuous exhaust channel than would be required to block the plasma without the magnetic field. Therefore, the pressure drop across the exhaust channel can be reduced in comparison with prior art designas that rely entirely on the sinuousness of the exhaust channel to block the plasma. Alternatively, if the magnetic field is strong enough, the magnetic field alone can block the plasma from reaching the exhaust pump withoug the need for any deflector in the exhaust channel.

Magnetic Barrier for Plasma in Chamber Exhaust

FIELD OF THE INVENTION

The invention relates generally to plasma chambers used in processes for manufacturing semiconductors and other electronic devices. More specifically, the invention relates to apparatus and methods for preventing plasma within the chamber from extending through the exhaust passage or exhaust channel that couples the chamber to an exhaust pump.

BACKGROUND OF THE INVENTION

The series of process steps used to fabricate semiconductors and other electronic devices commonly include various plasma processes for depositing or etching films. Such plasma processes generally are performed within a vacuum chamber whose interior is maintained at a low pressure by an exhaust pump. The pump is coupled to the chamber interior via an exhaust channel.

There are several reasons that is important to prevent the plasma within the chamber from extending through the exhaust channel to the exhaust pump.

One reason is that a plasma that extends a considerable distance through the exhaust channel typically is unstable, which causes the main plasma body adjacent the workpiece to be unstable, as evidenced by visible flickering of the light emitted by the plasma. Such instability produces unacceptable non-uniformities in the plasma process.

A second reason it is important to block the plasma from extending to the exhaust pump is to protect the pump from corrosion or undesirable deposits. Any component surfaces near the plasma body within a plasma chamber generally will be corroded due to bombardment by ions from the plasma. In addition, many plasma processes have byproducts which include reactive species that can combine to form polymers or other undesirable deposits on components within the chamber that are adjacent to the plasma body. To prevent such corrosion and undesirable deposits, it is common practice to cover with removable liners the surfaces of chamber components that are exposed to or adjacent to the plasma body. The liners are replaced periodically as they become corroded.

Typically it is impractical to provide easily replaceable components for the exhaust pump. Therefore, a need exists for a plasma chamber design that prevents the plasma within the chamber from extending too close to the exhaust pump.

Commonly assigned U.S. Patent 5,891,350, issued 4/6/99 to Shan et al., discloses a plasma chamber design that prevents the plasma from reaching the exhaust pump by interposing a long and sinuous exhaust passage between the chamber interior and the pump. One disadvantage of this design is that the sinuous exhaust passage creates a pressure drop between the chamber interior and the pump. In some applications, this may require an overly expensive pump to achieve a desired low chamber pressure.

SUMMARY OF THE INVENTION

The invention is a plasma chamber apparatus and method employing a magnet system to block the plasma within the chamber interior from reaching the exhaust pump. The chamber includes an exhaust passage or exhaust channel between the chamber interior and the pump.

In one aspect of the invention, the interior of the exhaust channel includes at least one deflector that creates turbulence in the flow of exhaust gases. The turbulence increases the rate of collisions of reactive species in the gases with the deflector and with the walls of the exhaust channel near the deflector. The collisions promote surface reactions among the reactive species so as to produce deposits on the walls. This depletes the exhaust gases of the reactive species that tend to produce such deposits, thereby greatly reducing or eliminating the concentration of such reactive species in the exhaust gases downstream of the deflector, and therefore greatly reducing or eliminating undesirable deposits on the components of the exhaust pump.

In addition, a magnet system is positioned near the deflector so as to produce a magnetic field within the adjacent region of the exhaust channel. The component of the magnetic field transverse to the direction of exhaust gas flow through the exhaust channel deflects moving electrons so that they are more likely to recombine with positive ions, thereby reducing the concentration of charged particles in the exhaust gases.

Since the deflector and the magnetic system both reduce the concentration of charged particles, the two in combination can reduce the concentration sufficiently to extinguish the plasma downstream of the deflector and magnet system. Specifically, the magnetic field should be strong enough, and the turbulence caused by the one or more deflectors should be great enough, so that the combined effects of the magnetic field and the deflector prevent the plasma body within the chamber from reaching the exhaust pump.

The plasma confinement effect of the magnetic field permits the use of a wider and/or less sinuous exhaust channel than would be required to block the plasma without the magnetic field. Therefore, the pressure drop across the exhaust channel can be reduced in comparison with prior art designs that rely entirely on the sinuousness of the exhaust channel to block the plasma.

In a preferred embodiment, the deflector comprises a protrusion extending into the exhaust channel from a wall of the channel. Preferably, the north and south poles of the magnet system are positioned within the protrusion.

In a second aspect of the invention, the magnet system provides a magnetic field that is strong enough to block the plasma from reaching the exhaust pump without the necessity of any deflector in the exhaust channel.

A third aspect of the invention is an especially effective design for the magnet system comprising a cylindrical magnet and two annular pole pieces. The magnet has north and south poles at axially opposite ends, and the two pole pieces respectively abut the two ends of the magnet. Alternatively, the magnet and the pole pieces can be interchanged, so that the system comprises a cylindrical pole piece and two annular magnets. This design can produce a magnetic field having a strong transverse component in the exhaust channel so as to effectively block the plasma, and yet having a strength that rapidly declines with axial distance so as to minimize the magnetic field near the semiconductor wafer or other workpiece being processed.

BRIEF DESCRIPTION OF THE DRAWINGS

Figure 1 is a plan view of a plasma etching chamber with an exhaust manifold having an annular, U-shaped magnet system embedded within an annular protrusion according to the invention.

Figure 2 is a detail of the magnet system and annular protrusions in the Figure 1 chamber.

Figure 3 is a perspective view of an annular, U-shaped magnet system with magnetic poles facing radially outward.

Figure 4 is a perspective view of a magnet system whose magnets and pole pieces are interchanged relative to the embodiment of Figure 3.

Figure 5 is a perspective view of an annular, U-shaped magnet system with magnetic poles facing radially inward.

Figure 6 is a perspective view of a magnet system whose magnets and pole pieces are

interchanged relative to the embodiment of Figure 5.

Figure 7 is a detailed plan view of an exhaust manifold having two annular magnets respectively embedded within two annular protrusions according to the invention.

DETAILED DESCRIPTION OF THE PREFERRED EMBODIMENTS

1. Conventional Chamber Components

Figure 1 shows one embodiment of the invention as applied to a plasma chamber suitable for either etching or chemical vapor deposition (CVD). The conventional components of the chamber will be described before describing the novel features for preventing the plasma from reaching the exhaust pump.

The illustrated chamber is cylindrical because it is adapted for processing a circular workpiece such as a semiconductor wafer. Alternatively, a chamber for processing a rectangular substrate conventionally would have a rectangular transverse cross section.

A cylindrical side wall 12, circular bottom wall 14, and annular top wall or lid 16 provide a vacuum tight enclosure for the chamber interior. A gas distribution plate 18, also called a diffuser or shower head, is mounted at the bottom of the lid 16. The gas distribution plate is perforated to function as a gas inlet through which process gases enter the chamber. The side wall 12 may be either dielectric or metal. If the side wall is metal, it will function as an electrically grounded electrode unless it is covered by sufficiently thick dielectric as explained below.

The semiconductor wafer or other workpiece 20 is mounted on, or immediately above, a disc-shaped metal susceptor or pedestal 22, which, in turn, is mounted in the lower end of the chamber. The workpiece 20 typically is clamped or held against the upper surface of the susceptor 22 by a conventional chuck such as a mechanical clamping ring or an electrostatic chuck, not shown. (Another conventional alternative chuck is a plurality of lift pins on which the workpiece rests a short distance above the susceptor. In this patent specification, we define "chuck" as any means for holding the workpiece on or adjacent the susceptor during plasma processing.)

A vacuum pump 28 exhausts gases from the chamber through annular exhaust manifold 30 and cylindrical pumping channel 32 so as to reduce the total gas pressure in the chamber to a level suitable for the plasma process intended to be performed in the chamber, typically in the range of 10 millitorr to 20 torr, with pressures at the lower and higher ends of the range being typical for etching and CVD

processes, respectively. A throttle valve 34 is mounted within the pumping channel 32. The throttle valve regulates the gas pressure within the chamber by controlling the impedance to gas flow within the pumping channel, thereby controlling the pressure drop across the pumping channel as required to maintain the desired chamber pressure.

In a capacitively coupled plasma chamber such as the one illustrated in Figure 1, energy is coupled to the plasma by a radio frequency (RF) power supply connected directly to an electrode within the chamber. Typically, the gas distribution plate 18 and the susceptor 22 are electrically connected so as to function as anode and cathode electrodes, respectively. Specifically, the RF power supply, not shown, is connected to either the anode electrode 18 (commonly for plasma CVD) or to the cathode electrode 22 (commonly for reactive ion etching). The other electrode may be connected to a second electrical power supply, or else it may be electrically grounded. The RF power supply provides an RF voltage between the cathode and anode electrodes that excites the gases within the chamber into a plasma state.

As an alternative to capacitive coupling, any other conventional means may be used to couple energy to the gases within the chamber to form a plasma. For example, RF power may be coupled to the chamber interior by means of an antenna or induction coil, or microwave power may be coupled via a microwave wave guide connected to the chamber. RF coupling by means of antennas or induction coils is described in commonly assigned US Patents 5,449,432 issued 9/12/95 to Hanawa; 5,540,824 issued 7/30/96 to Yin et al.; 5,556,501 issued 9/17/96 to Collins et al.; 5,614,055 issued 3/25/97 to Fairbairn et al.; 5,683,539 issued 11/4/97 to Qian et al.; 5,707,486 issued 1/13/98 to Collins; 5,710,486 issued 1/20/98 to Ye et al.; 5,772,771 issued 6/30/98 to Li et al.; 5,783,101 issued 7/21/98 to Ma et al.; Microwave plasma sources are described in US Patent 5,620,526 issued 4/15/97 to Watatani et al. and in commonly-assigned US Patents 5,683,517 issued 11/4/97 to Shan; 5,702,530 issued 12/30/97 to Shan et al.; 5,788,778 issued 8/4/98 to Shang et al.; and 5,543,688 issued 8/6/96 to Morita. The disclosures of the patents identified in this paragraph are hereby incorporated by reference into this patent specification.

Surfaces of chamber components that are exposed to the plasma within the chamber generally suffer corrosion or an accumulation of undesirable residue during operation of the plasma chamber. To minimize the need to clean or replace major chamber components, such components commonly are covered by a liner or shield that is easily removable for cleaning or replacement. Specifically, in the

preferred embodiment shown in Figure 1, the chamber side wall 12 is covered by a first cylindrical liner or shield 36, also called the outer liner or outer shield. The cylindrical outer wall of the susceptor 22 is covered by a second cylindrical liner or shield 38, also called the inner liner or susceptor shield. In addition, a workpiece shield ring 24 rests on and covers the portion of the top surface of the susceptor that is outside the perimeter of the wafer 20.

The inner liner 38 includes an annular flange 40 that extends radially outward from the lower end of the inner liner 38 and rests on the chamber bottom wall 14. The flange 40 covers and protects the surface of the chamber bottom wall that otherwise would be exposed to the interior of the exhaust manifold 30. The inner liner 38 is held in place by the weight of the outer dielectric liner 36. An O-ring 37 provides a seal between the inner and outer liners.

Each of the shields 36, 38 and 24 should be resistant to corrosion by the plasma and by the gas chemistries anticipated to be used in the chamber. In the illustrated plasma chamber used for reactive ion etching, the outer and inner liners 36 and 38 are anodized aluminum and the workpiece shield ring 24 is quartz.

However, the bottom surface of the flange 40 is bare aluminum rather than being anodized. The bare aluminum provides consistently good electrical contact between the inner liner 38 and the electrically grounded chamber bottom wall 14, thereby providing more consistent performance of the semiconductor fabrication process performed in the chamber than would be possible if an anodized bottom surface of flange 40 provided inconsistent electrical contact. Alternatively, as explained below, it may be desirable to fabricate the susceptor shield of dielectric material. In that case, there would be no issue of inconsistent electrical contact with the inner liner.

O-ring 37 can stick to the outer and inner shields 36 and 38, making it difficult to separate the shields when they are being replaced. If so, the sticking can be prevented by placing a thin, aluminum ring (not shown) between the O-ring 37 and the bottom of the outer shield 36.

The anodization on the surface of the outer and inner shields 36 and 38 is a thin dielectric that reduces somewhat the RF current flow between the plasma and the metal surfaces covered by the shields. An even greater reduction in such current flow may be desirable in order to concentrate the plasma in the region adjacent the workpiece 20. This can be accomplished by fabricating the shields entirely of dielectric material such as quartz rather than anodized aluminum.

The inner liner 38 and the lower half of the outer liner 36 respectively function as the inner and

outer walls of the annular exhaust manifold 30. The annular flange 40 at the bottom of the inner liner 38 includes an arcuate aperture 42, aligned with the cylindrical pumping channel 32, to permit exhaust gases to flow from the annular exhaust manifold, through the flange aperture 42, and then through the cylindrical pumping channel 32 to the throttle valve 34 and the pump 28.

The various chamber components described above are described in more detail in commonly assigned U.S. Patent 5,891,350, issued 4/6/99 to Shan et al., the entire content of which is hereby incorporated by reference into this patent specification.

The exhaust channel of the illustrated chamber includes an annular exhaust manifold and a cylindrical pumping channel. The annular exhaust manifold is coaxial with the chamber interior and extends around all or most of the azimuth of the chamber interior. The cylindrical pumping channel is coupled to the exhaust manifold at one azimuthal position. Some conventional plasma chambers include an annular exhaust manifold coupled directly to the exhaust pump without any intermediate pumping channel. Other conventional plasma chambers couple the pump to the chamber interior using only a pumping channel that does not extend around the azimuth of the chamber interior. In this patent specification, the term "exhaust channel" or "exhaust passage" encompasses either an annular exhaust manifold or a pumping channel, or the two in combination.

2. Exhaust Channel and Magnet for Confining Plasma

The preferred embodiment of the invention, shown in Figures 1–3, employs two features — a gas flow deflector 44, 46 and a magnet system 50 — that operate synergistically to prevent the plasma body within the chamber interior from reaching the exhaust pump.

Specifically, the interior of the exhaust manifold 30 includes at least one deflector 44, 46 that deflects at least a substantial portion of the exhaust gases transversely, instead of allowing all of the exhaust gases to flow in an unobstructed straight path through the exhaust manifold. (By "transversely" we mean perpendicular to the direction of the path along which the gases would flow in the absence of the deflector.)

The deflector creates turbulence in the flow of exhaust gases that increases the rate of collisions of reactive species in the gases with the deflector and with the walls of the exhaust manifold near the deflector. The collisions promote surface reactions among the reactive species so as to produce deposits on the walls. This depletes the exhaust gases of the reactive species that tend to produce such

deposits, thereby greatly reducing or eliminating the concentration of such reactive species in the exhaust gases downstream of the deflector, and therefore greatly reducing or eliminating undesirable deposits on the throttle valve 34 and pump 28.

The deflector also increases the rate of collisions of charged particles in the exhaust gases so as to promote recombination of such charged particles, thereby reducing the concentration of charged particles in the exhaust gases.

Additionally, a magnet system 50 (comprising elements 52–57, described below) is positioned near the deflector 44, 46 so as to produce a magnetic field within the exhaust manifold near the deflector. The magnetic field preferably has a substantial component directed transverse to the direction of exhaust gas flow through the manifold. The transverse component of the magnetic field transversely deflects moving electrons so that they are more likely to recombine with positive ions, thereby reducing the concentration of charged particles in the exhaust gases.

Since the deflector and the magnetic system both reduce the concentration of charged particles in the exhaust gases, the two in combination can reduce the concentration sufficiently to extinguish the plasma downstream of the deflector and magnet system. Specifically, the magnetic field should be strong enough, and the turbulence caused by the one or more deflectors should be great enough, so that the combined effects of the magnetic field and the deflector prevent the plasma body within the chamber from reaching the throttle valve 34 and exhaust pump 28.

The plasma confinement effect of the magnetic field permits the use of a wider and/or less sinuous exhaust channel than would be required to block the plasma without the magnetic field. Therefore, the pressure drop across the exhaust channel can be reduced in comparison with prior art designs that rely entirely on the sinuousness of the exhaust manifold to block the plasma.

In the preferred embodiment shown in Figures 1–3, the deflector consists of two coaxial, annular protrusions 44, 46 extending into the gas passageway of the exhaust manifold 30 from the walls of the manifold. The upper protrusion 44 extends radially inward from the outer dielectric liner 36, and the lower protrusion 46 extends radially outward from the inner dielectric liner or cathode shield 38. Because the two protrusions overlap each other radially, they do not permit any of the exhaust gases to travel in a straight line through the exhaust manifold, thereby maximizing the likelihood that reactive species in the exhaust gases will collide with either the protrusions or the walls of the exhaust manifold.

We define a "magnet system" as one or more magnets in combination with zero, one or more magnetically permeable pole pieces to form a magnetic circuit having a north pole and a south pole. In the preferred embodiment of Figures 1–3, the magnet system 50 consists of two annular magnets 52, 53 mounted coaxially with the annular exhaust manifold 30 and spaced apart along the axis of the manifold. The two annular magnets are identical, except that the first (upper) magnet 52 has its north and south poles at its radially outer and inner ends, respectively, whereas the second (lower) magnet 53 has its north and south poles at its radially inner and outer ends, respectively. The magnet system 50 also includes a cylindrical, magnetically permeable pole piece 54 mounted coaxially with the two magnets 52, 53 so as to abut and extend between the radially inner ends of the two magnets, thereby completing a magnetic path or "magnetic circuit" between the two magnets.

Consequently, the north pole 56 of the magnet system 50 is the north pole of the first annular magnet 52, i.e., the pole of the first magnet opposite the pole that abuts the pole piece 54. The south pole 57 of the magnet system 50 is the south pole of the second annular magnet 53, i.e., the pole of the second magnet opposite the pole that abuts the pole piece 54.

The magnet system 50 preferably is mounted within the lower protrusion 46 so that the ends of the north and south poles 56, 57 of the magnet system are as close as possible to the narrow portion of the gas passageway within the exhaust manifold that is radially outward of the protrusion. Mounting the magnet system close to the narrowest portion of the exhaust manifold passageway is desirable to maximize the magnetic field strength to which the exhaust gases are subjected.

The preferred implementation of the magnet system just described has a U-shaped cross section as shown in Figures 1–3, with the base of the "U" pointing radially inward and the open end of the "U" pointing radially outward. More specifically, the shape of the magnet system is that of a U-shaped horseshoe magnet that is revolved around the longitudinal axis of the chamber.

The magnetic field pattern produced by this U-shaped magnet system, represented by field line 58 in Figure 1, is desirable because it is concentrated primarily within the passageway of the exhaust manifold. This concentration has at least two advantages. One advantage is that, as stated above, it maximizes the magnetic field strength to which the exhaust gases are subjected, thereby maximizing the effectiveness of the magnet in extinguishing the plasma downstream of the magnet.

A second advantage of the U-shaped magnet system is that the magnetic field strength declines rapidly along the longitudinal axis of the chamber, so that the magnetic field strength is low at the

workpiece 20. To minimize the risk of damaging the workpiece by ion bombardment or electrostatic charge accumulation, the magnetic field strength at the workpiece should be as low as possible, preferably no greater than 5 gauss, and more preferably no greater than 3 gauss. The magnet system is mounted in the lower protrusion rather than the upper protrusion in order to position the magnet system as far as possible from the workpiece 20, thereby minimizing the strength of the magnetic field at the workpiece.

In our tests of the embodiment of Figures 1–3, we found that the combination of the protrusions 44, 46 and the magnet system 50 succeeded in blocking the plasma within the chamber from extending downstream of the lower protrusion when the magnets 52, 53 were strong enough to produce a magnetic field of at least 100 gauss across the gap between the lower protrusion 46 and the outer chamber liner 36. The radial (horizontal) width of this gap was 0.5 inch. To provide an additional margin of assurance that the plasma will be blocked, in our preferred embodiment the magnet system 50 is 50% stronger than this, so as to produce a magnetic field of at least 150 gauss across the gap. Even with this stronger magnet system, we found that, in the illustrated chamber, the magnetic field strength declined fast enough away from the magnet system so that the magnetic field strength at the workpiece position 20 was less than 3 gauss, which we consider low enough to avoid risk of damage to the workpiece.

Figure 4 shows an alternative magnet system 60 whose magnets and pole pieces are interchanged relative to the embodiment of Figures 1–3. Specifically, the upper and lower annular members 62, 63 are magnetically permeable pole pieces rather than magnets. The cylindrical member 64 is a magnet rather than a pole piece, the cylindrical magnet having a north magnetic pole at the upper end of its longitudinal axis abutting the upper pole piece 62 and a south magnetic pole at the lower end of its axis abutting the lower pole piece 63.

A possible alternative implementation of the exhaust manifold could omit the upper protrusion 44, relying on the combination of the lower protrusion 46 and the magnet system 50 to block the plasma.

Another alternative exhaust manifold design would omit the lower protrusion 46 (which extends radially outward from the inner liner 38) and substitute a modified magnet system 51, shown in Figure 5, that is mounted within the upper protrusion 44 (which extends radially inward from the outer liner 36). The north and south magnetic poles 56, 57 of the modified magnet system 51 should

be adjacent the gas passageway at the radially inner end of the protrusion 44. This can be accomplished using the same magnets 52, 53 and pole piece 54 as in the Figure 3 magnet system, but with the pole piece 54 moved from the radially inner end to the radially outer end of the two magnets, as shown in Figure 5.

Figure 6 shows an alternative magnet system 61 that differs from the Figure 5 magnet system 51 in that the magnets and pole pieces are interchanged. (See the preceding discussion of the Figure 4 embodiment.)

We also tested the exhaust manifold design shown in Figure 7 in a plasma chamber that otherwise was identical to the chamber shown in Figure 1. The exhaust manifold of Figure 7 includes upper and lower annular magnets 68, 69 mounted within the upper and lower protrusions 44, 46, respectively, of the exhaust channel. The upper magnet 68 has north and south poles at its radially inner and outer ends, respectively. The lower magnet 69 has north and south poles at its radially outer and inner ends, respectively. Consequently, the north and south poles of the upper magnet are aligned with the south and north poles of the lower magnet. The resulting magnetic field, depicted by magnetic field lines 70, is highly concentrated in the region of the exhaust manifold channel or passageway between the two protrusions. As explained in the preceding discussion of the Figure 1 embodiment, such concentration is desirable to maximize the strength of the magnetic field to which the exhaust gases are subjected and to minimize the magnetic field at the workpiece 20.

To facilitate testing the Figure 7 embodiment with different gaps between upper and lower protrusions 44, 46, our prototype included an annular dielectric spacer 72 below the outer dielectric liner 36. By substituting a thicker spacer 72, we could increase the height of the upper protrusion 44 and thereby increase the gap between the two protrusions. We used the same magnets 68, 69 for every spacer thickness we tested. Therefore, when we substituted a thicker spacer, we both increased the gap and decreased the magnetic field strength in the gap.

In these tests we found that the plasma was successfully blocked from extending below the lower protrusion when the gap between the upper and lower protrusion was 0.5 inch or less and the magnetic field strength in the gap was at least 100 or 150 gauss. We also found that, in the illustrated chamber, the magnetic field strength declined fast enough away from the magnets so that the magnetic field strength at the workpiece position 20 was less than 3 gauss, which we consider low enough to avoid risk of damage to the workpiece. However, when we tested a wider gap between the two

protrusions, and therefore a lower magnetic field strength in the gap, we found that the plasma was not successfully blocked.

We currently prefer the Figure 1 embodiment because more manufacturing labor is required to mount magnets within two protrusions as in the Figure 7 design in comparison with mounting magnets in only one protrusion as in the Figure 1 design.

In an alternative implementation that omits the outer dielectric liner 36, the chamber side wall could function as the outer wall of the annular exhaust manifold. The chamber wall could include an inward-extending protrusion 44.

Another alternative embodiment of the exhaust manifold would be to omit one protrusion and its corresponding magnet from the Figure 7 embodiment. We tested a prototype that was identical to the one shown in Figure 7, except that the upper protrusion 44 and the upper magnet 68 was omitted. While this prototype successfully, blocked the plasma from extending below the lower protrusion, we considered the magnetic field at the workpiece to be undesirably strong. However, this embodiment might be suitable for use in semiconductor fabrication processes in which the workpiece is not overly susceptible to damage by ion bombardment or electrostatic charge accumulation.

More generally, the deflector 44, 46 need not be one or more protrusions extending from the walls of the exhaust channel, but can be any structure within the exhaust channel that causes substantial turbulence in the exhaust gases. As described earlier, such turbulence will promote recombination of charged particles so as to help extinguish the plasma downstream of the turbulence, and it will promote surface reactions among reactive species so that reaction products will be deposited on surfaces near the deflector rather than on pumping components 28, 34 downstream.

The deflector and magnet system can be mounted in any part of the exhaust channel, such as the pumping channel 32, even though they are mounted in the annular exhaust manifold in the preferred embodiment.

Of course, any materials between the magnet system and the interior of the exhaust channel should be non-magnetic so as to avoid blocking the magnetic field from reaching the exhaust gases. As stated earlier, in the preferred embodiment the protrusions in which the magnet system is mounted are anodized aluminum.

If the magnet system produces a sufficiently strong magnetic field in a direction transverse to the gas flow through the exhaust channel, such magnetic field can block the plasma from extending to

the exhaust pump downstream of the magnet system without the need for any deflector in the exhaust channel. Therefore, in an alternative embodiment of the invention having such a strong magnet system, the deflector can be completely omitted.

To equalize the exhaust gas flow rate around the azimuth of the chamber, it is preferable to slightly reduce the radial width of the exhaust manifold near the azimuth of the pumping channel and to slightly increase its radial width near the opposite azimuth, i.e., near the azimuth 180 degrees away from the pumping channel.

The directions of the magnetic fields can be reversed without affecting the operation of the invention. Therefore, all references to north and south poles can be interchanged.

The illustrated plasma chamber has circular symmetry because it is intended for processing a a single, circular semiconductor wafer. In plasma chambers having other geometries, such as chambers for processing multiple substrates or rectangular substrates, the components of the invention such as the deflector and magnet system would be expected to have rectangular or more complex geometries. The term "annular" as used in this patent specification is not intended to limit the described shape to one having a circular inner or outer perimeter, but encompasses rectangular shapes and more complex shapes.

CLAIMS

1. A plasma chamber comprising:

a vacuum chamber enclosure enclosing a chamber interior;

a gas inlet aperture for admitting a gas into the chamber interior;

a plasma excitation power source for coupling energy to the gas so as to excite at least a portion of the gas to produce a plasma within the chamber interior;

an exhaust pump;

an exhaust channel extending between the chamber interior and the exhaust pump so as to provide a path for gas flow from the chamber interior to the exhaust pump;

a deflector positioned within the exhaust channel so as to create turbulence in said gas flow through the exhaust channel; and

a magnet system having north and south magnetic poles positioned adjacent the deflector.

2. A plasma chamber according to claim 1, wherein the magnet system produces a magnetic field strong enough to block said plasma from extending from the chamber interior to the exhaust pump.

3. A plasma chamber according to claim 1, further comprising:

a chuck for holding a substrate at a substrate position within the chamber interior;

wherein the magnet system is positioned far enough from the substrate position so that the magnet system does not produce a magnetic field greater than 5 gauss at the substrate position.

4. A plasma chamber according to claim 1, wherein:

the magnet system has an annular shape and is positioned coaxially with the exhaust channel.

5. A plasma chamber according to claim 1, wherein:

the north and south magnetic poles are spaced apart along said gas flow path.

6. A plasma chamber according to claim 1, wherein:

the north and south magnetic poles are positioned on opposite sides of said gas flow path so as

to produce a magnetic field transverse to said gas flow path.

7. A plasma chamber comprising:

a vacuum chamber enclosure enclosing a chamber interior;

a gas inlet aperture for admitting a gas into the chamber interior;

a plasma excitation power source for coupling energy to the gas so as to excite at least a portion of the gas to produce a plasma within the chamber interior;

an exhaust pump;

an exhaust channel extending between the chamber interior and the exhaust pump so as to provide a path for gas flow from the chamber interior to the exhaust pump;

a deflector positioned within the exhaust channel so as to transversely deflect a substantial portion of said gas flow through the exhaust channel; and

a magnet system having north and south magnetic poles positioned adjacent the deflector.

8. A plasma chamber according to claim 7, wherein:

the exhaust channel comprises

an inlet aperture in fluid communication with the chamber interior,

an outlet aperture in fluid communication with the pump, and

at least a first wall that extends between the inlet aperture and the outlet aperture;

the deflector comprises a protrusion extending from the first wall of the exhaust channel into the exhaust channel so as to reduce the transverse width of the exhaust channel adjacent the protrusion; and

the north and south poles of the magnet system are positioned within the protrusion.

9. A plasma chamber according to claim 8, wherein:

the pump produces a flow of gas from the chamber interior, through a gas flow path within the exhaust channel, and to the pump; and

the north and south magnetic poles are spaced apart along said gas flow path.

10. A plasma chamber according to claim 8, wherein the magnet system produces a magnetic field strong enough to block said plasma from extending from the chamber interior through the exhaust channel beyond the protrusion.

11. A plasma chamber according to claim 8, further comprising:

a chuck for holding a substrate at a substrate position within the chamber interior;

wherein the magnet system is positioned far enough from the substrate position so that the magnet system does not produce a magnetic field greater than 5 gauss at the substrate position.

12. A plasma chamber according to claim 8, wherein:

the protrusion has an annular shape and is positioned coaxially with the exhaust channel; and

the magnet system has an annular shape and is positioned coaxially with the exhaust channel.

13. A plasma chamber, comprising:

a vacuum chamber enclosure enclosing a chamber interior;

a gas inlet aperture for admitting a gas into the chamber interior;

a plasma excitation power source for coupling energy to the gas so as to excite at least a portion of the gas to produce a plasma within the chamber interior;

an exhaust pump;

an exhaust channel including

an inlet aperture in fluid communication with the chamber interior,

an outlet aperture in fluid communication with the pump, and

at least a first wall that extends between the inlet aperture and the outlet aperture; and

a magnet system having north and south magnetic poles positioned adjacent the first wall;

wherein the plasma chamber does not include any other magnet adjacent said magnet system.

14. A plasma chamber according to claim 13, wherein:

the pump produces a flow of gas from the chamber interior, through a gas flow path within the exhaust channel, and to the pump; and

the north and south magnetic poles are spaced apart along said gas flow path.

15. A plasma chamber according to claim 13, wherein:

the north and south magnetic poles are adjacent a first area of the first wall; and

the magnet system produces a magnetic field strong enough to block said plasma from extending from the chamber interior through the exhaust channel beyond said first area.

16. A plasma chamber according to claim 13, further comprising:

a chuck for holding a substrate at a substrate position within the chamber interior;

wherein the magnet system is positioned far enough from the substrate position so that the magnet system does not produce a magnetic field greater than 5 gauss at the substrate position.

17. A magnet system comprising:

a cylindrical, magnetically permeable pole piece having first and second axially opposite ends;

an annular first magnet having north and south poles at radially inner and outer ends, respectively, wherein the first magnet is positioned coaxially with the pole piece so as to abut the first end of the pole piece; and

an annular second magnet having south and north poles at radially inner and outer ends, respectively, wherein the second magnet is positioned coaxially with the pole piece so as to abut the second end of the pole piece.

18. A magnet system according to claim 17, wherein:

the outer end of the first magnet abuts the pole piece; and

the outer end of the second magnet abuts the pole piece.

19. A magnet system according to claim 17, wherein:

the inner end of the first magnet abuts the pole piece; and

the inner end of the second magnet abuts the pole piece.

20. A magnet system according to claim 17, wherein the exhaust channel has an annular shape and the first wall provides a radially inner boundary of the exhaust channel.

21. A magnet system according to claim 17, wherein the exhaust channel has an annular shape and the first wall encircles the exhaust channel.

22. A magnet system according to claim 17, wherein the exhaust channel has a generally cylindrical shape and the first wall encircles the exhaust channel.

23. A magnet system comprising:

a cylindrical magnet having north and south poles at axially opposite ends of the magnet;

a first magnetically permeable pole piece that is annular in shape and is positioned coaxially with the magnet so as to abut the north pole of the magnet; and

a second magnetically permeable pole piece that is annular in shape and is positioned coaxially with the magnet so as to abut the south pole of the magnet.

24. A magnet system according to claim 23, wherein:

the first pole piece has a radially outer end that abuts the north pole of the magnet; and

the second pole piece has a radially outer end that abuts the south pole of the magnet.

25. A magnet system according to claim 23, wherein:

the first pole piece has a radially inner end that abuts the north pole of the magnet; and

the second pole piece has a radially inner end that abuts the south pole of the magnet.

26. A method of preventing the plasma within a plasma chamber from extending through the exhaust channel of the chamber to the exhaust pump, comprising the steps of:

providing a vacuum chamber enclosure that encloses a chamber interior;

admitting a gas into the chamber interior;

coupling energy to the gas so as to excite at least a portion of the gas to produce a plasma within the chamber interior;

providing an exhaust channel extending between the chamber interior and an exhaust pump so as to provide a path for gas flow from the chamber interior to the exhaust pump;

positioning a deflector within the exhaust channel so as to create turbulence in said gas flow

through the exhaust channel; and

creating a magnet field within the exhaust channel having a substantial component that is transverse to said gas flow path.

27. A method according to claim 26, wherein the creating step comprises:

creating said magnetic field with sufficient strength to block said plasma from extending from the chamber interior to the exhaust pump.

28. A method according to claim 26, further comprising the step of:

holding a substrate at a substrate position within the chamber interior;

wherein the creating step comprises creating said magnetic field with a strength that diminishes sufficiently from the exhaust channel to the substrate position so that said magnetic field is no greater than 5 gauss at the substrate position.

29. A method according to claim 26, wherein the creating step comprises:

positioning an annular magnet system coaxially with the exhaust channel.

30. A method according to claim 26, wherein the creating step comprises:

positioning a magnet system adjacent the exhaust channel so that north and south magnetic poles of the magnet system are spaced apart along said gas flow path.

31. A method according to claim 26, wherein the creating step comprises:

positioning a magnet system adjacent the exhaust channel so that north and south magnetic poles of the magnet system are positioned on opposite sides of said gas flow path so as to produce a magnetic field transverse to said gas flow path.

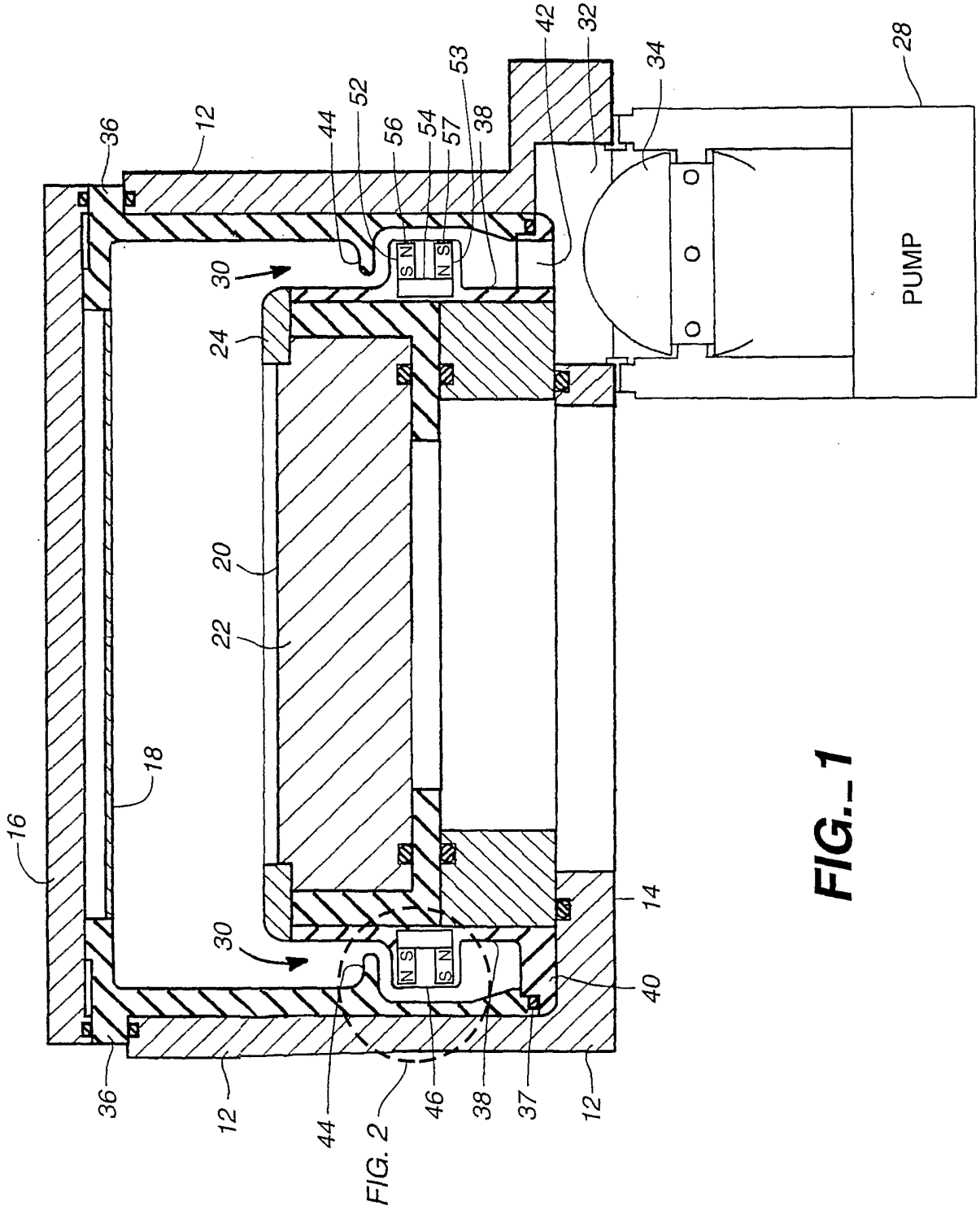
PUMP
28
42
32
34
53
52
44
56
54
57
38
36
12
30
24
20
22
18
16
14
40
46
37
S N
N S

FIG. 1

FIG. 2

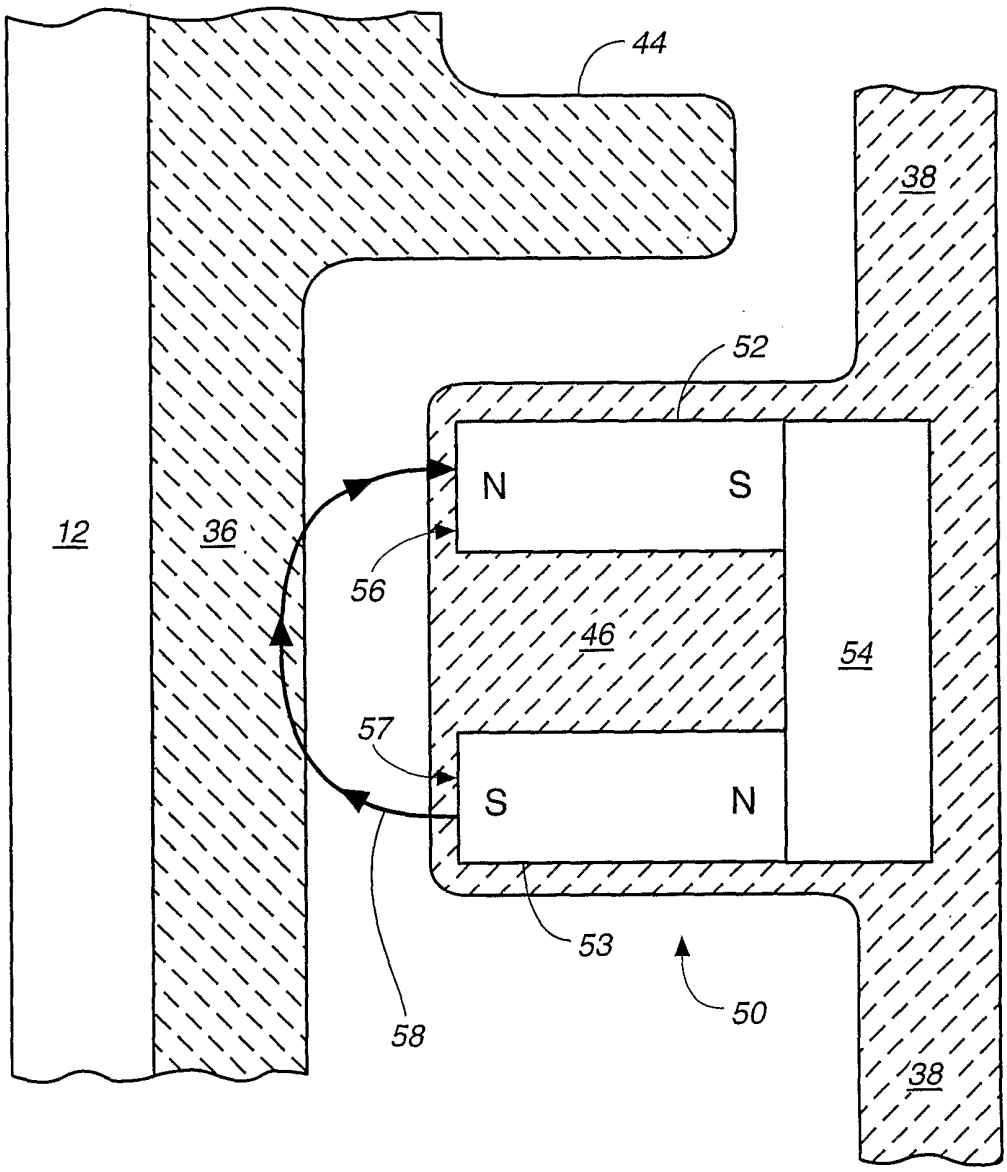

FIG._2

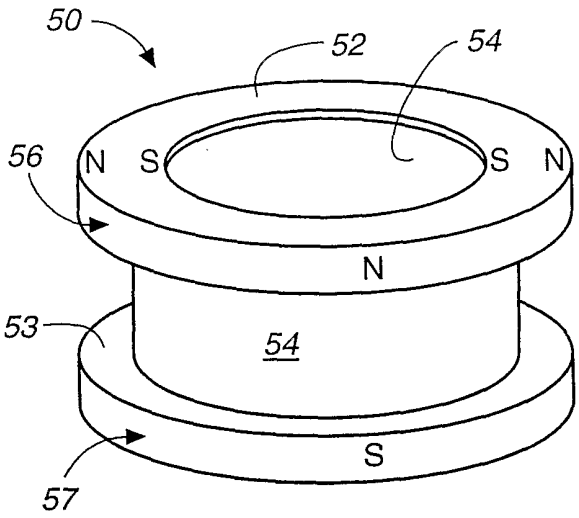

FIG._3

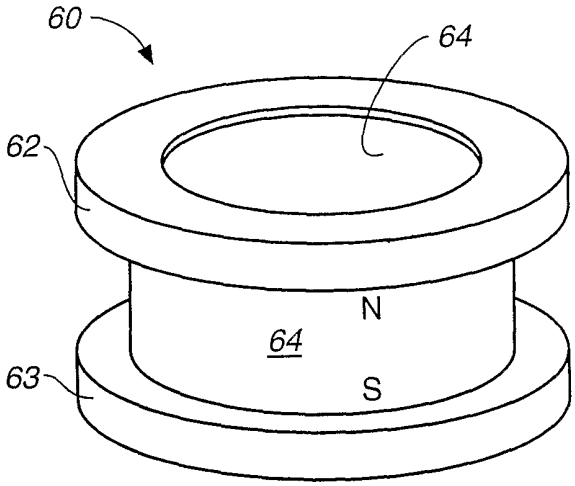

FIG._4

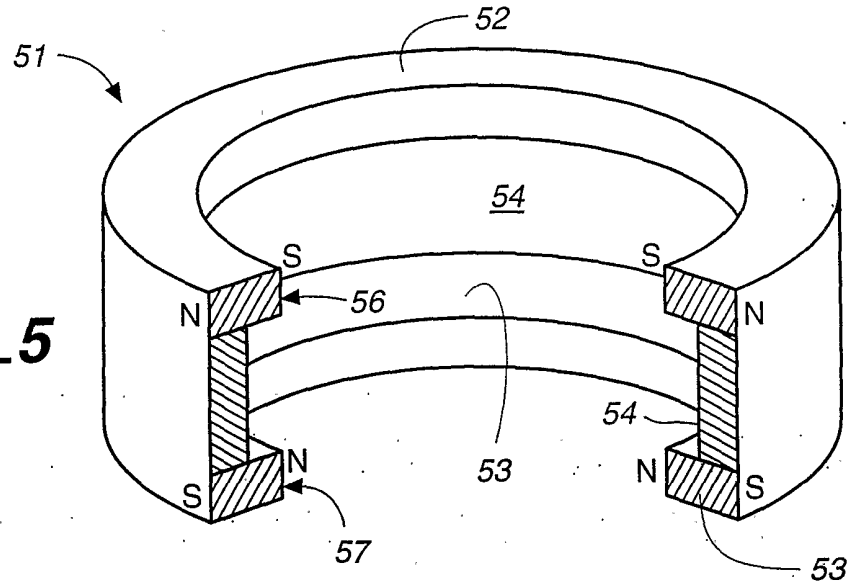

FIG._5

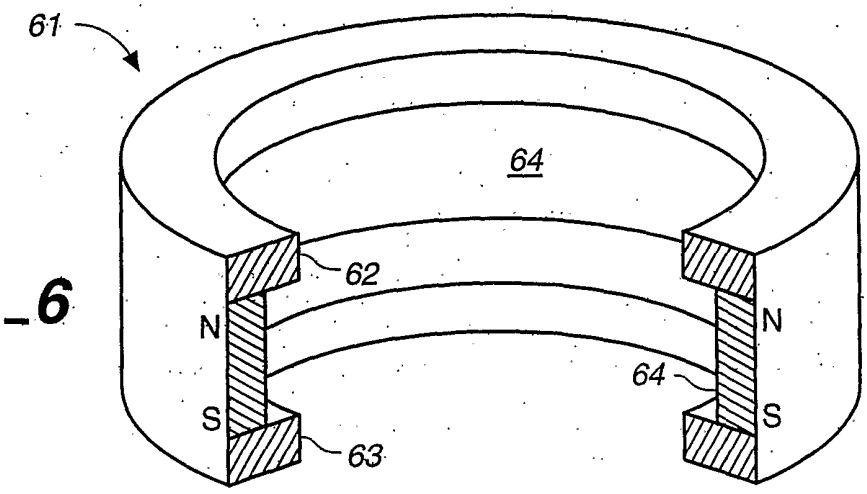

FIG._6

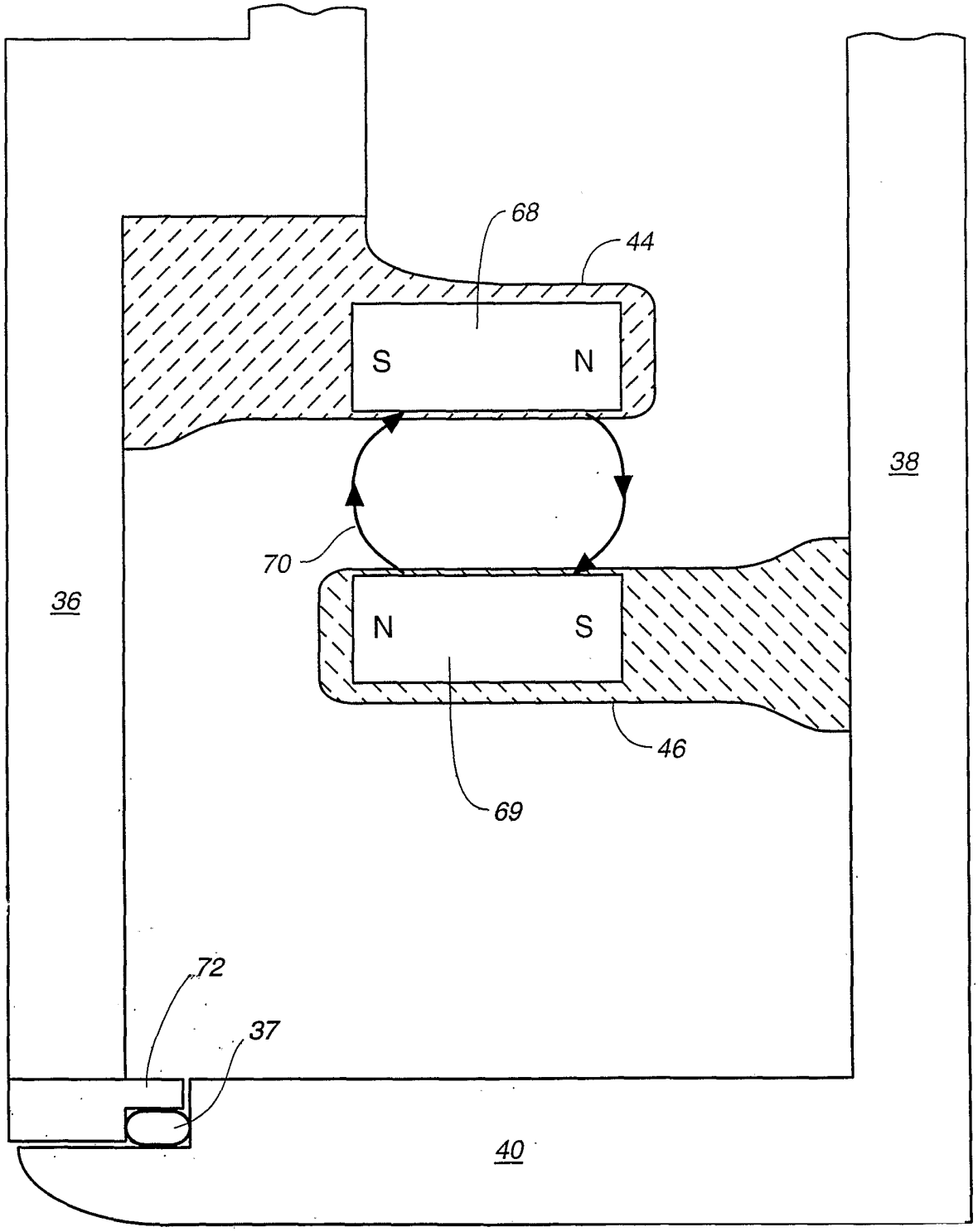

FIG._7