Aug. 2, 1966 D. F. ARMOUR 3,263,873

SPRAY DISPENSING DEVICE

Filed Sept. 16, 1964 4 Sheets-Sheet 1

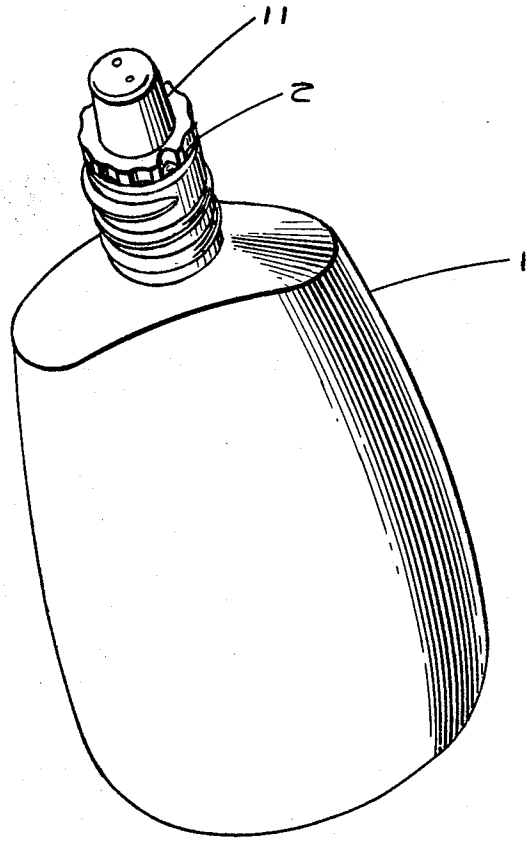

FIG. 1

DONALD F. ARMOUR
INVENTOR.

BY Paul O'Sullivan
ATTORNEY

Aug. 2, 1966 D. F. ARMOUR 3,263,873

SPRAY DISPENSING DEVICE

Filed Sept. 16, 1964 4 Sheets-Sheet 2

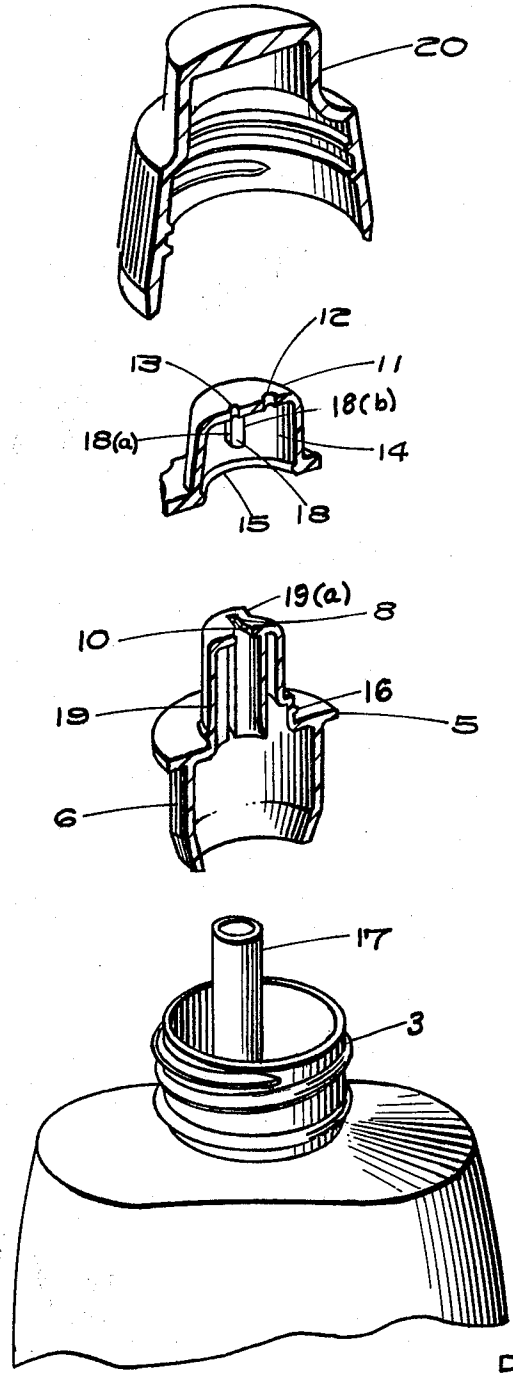

FIG. 2

DONALD F. ARMOUR
INVENTOR.

BY Paul O'Sullivan
ATTORNEY

Aug. 2, 1966 D. F. ARMOUR 3,263,873

SPRAY DISPENSING DEVICE

Filed Sept. 16, 1964 4 Sheets-Sheet 3

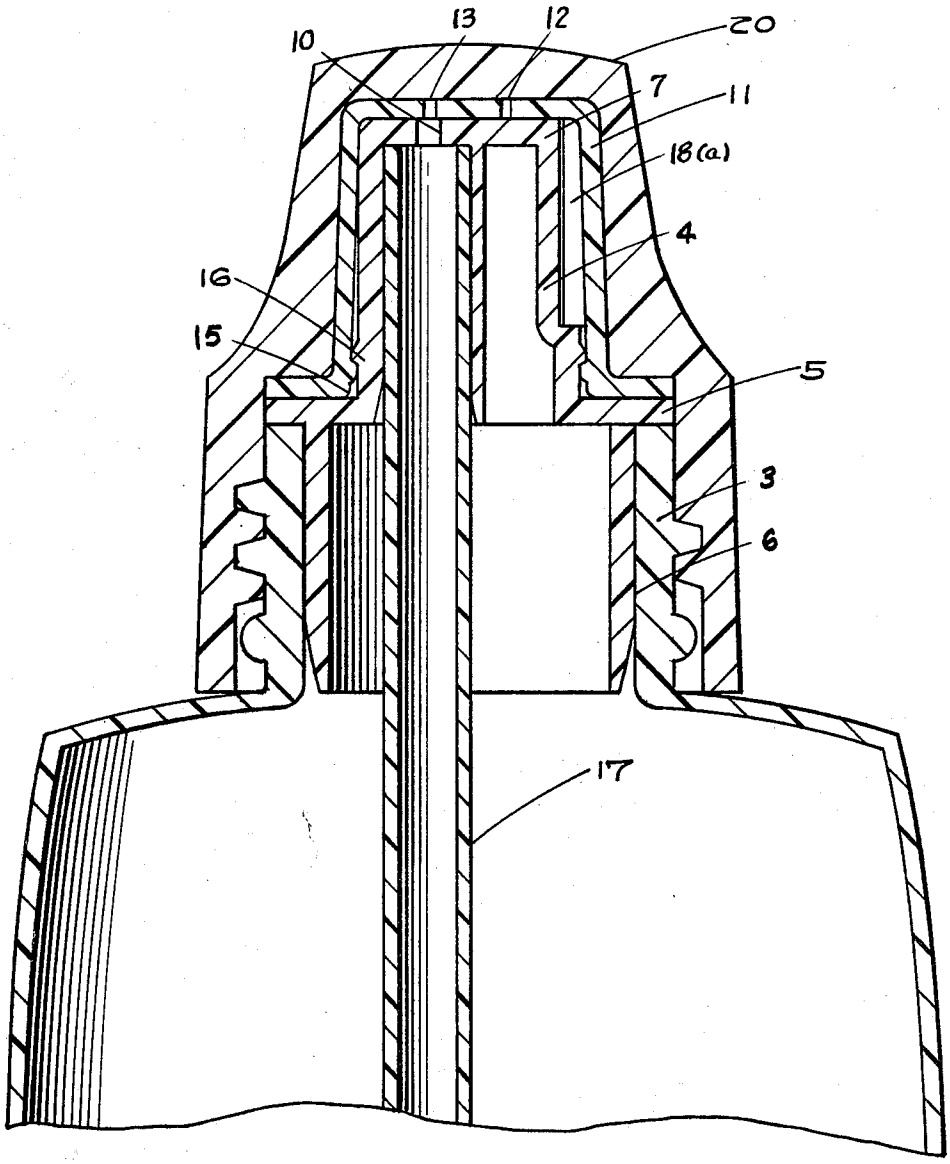

FIG. 3

DONALD F. ARMOUR
INVENTOR.

BY Paul C. Sullivan
ATTORNEY

Aug. 2, 1966 D. F. ARMOUR 3,263,873

SPRAY DISPENSING DEVICE

Filed Sept. 16, 1964 4 Sheets-Sheet 4

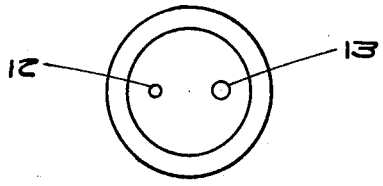

FIG. 4

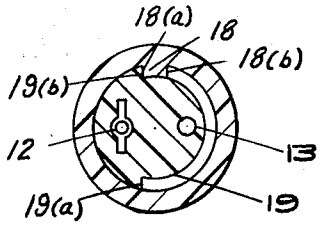

FIG. 5

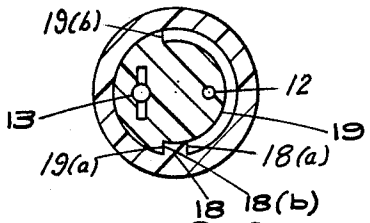

FIG. 6

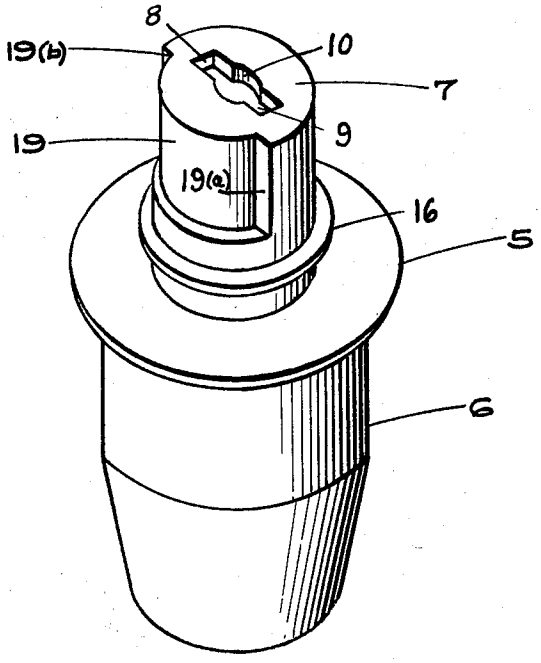

FIG. 7

DONALD F. ARMOUR
INVENTOR.

BY Paul O'Sullivan
ATTORNEY

United States Patent Office 3,263,873 Patented August 2, 1966

3,263,873

SPRAY DISPENSING DEVICE

Donald F. Armour, Bloomfield, Conn., assignor to Monsanto Company, St. Louis, Mo., a corporation of Delaware

Filed Sept. 16, 1964, Ser. No. 396,908
1 Claim. (Cl. 222—484)

The present invention relates generally to a new and useful spray dispensing device, and more particularly to a spray dispenser which is capable of emitting sprays of varying intensity.

There are in existence various types of spray containers constructed of a variety of materials which utilize intricate and involved mechanisms to produce a spray of a uniform texture and density. These spray containers, however, fail to provide for the desirable degree of flexibility needed in adjusting a particular spray intensity to a particular application. Those spray containers available which allow this degree of flexibility generally do so only at the sacrifice of simplicity of construction, or at a cost which is prohibitive for many applications.

It has now been discovered in accordance with the present invention that it is possible to produce a spray container which, through the manipulation of a single rotatable mechanism, can produce sprays of varying density and pressure. Spray containers of this type present obvious advantages over presently known spray containers, particularly in applications such as oral and nasal pharmaceutical sprays.

It is therefore an object of this invention to provide a new and useful spray dispensing device which presents obvious advantages over spray dispensing devices presently available.

It is a particular object of this invention to provide such an improved dispensing device including functionally interrelated material outlet and outlet closure means which cooperate to allow a user to effect a desired spray intensity by a simple rotatable manipulation of the closure means.

It is an additional object of this invention to provide such interrelated outlet and closure with means which cooperate to insure accurate and positive positioning of the respective components associated with the device.

It is a further object of this invention to provide a structural assembly of a container closure and outlet which is characterized by cylindrically configured components which are coaxially arranged and operably interconnected by appropriate abutment means to provide a structure of maximum simplicity, foolproof mode of assembly and functional reliability.

Each of the above objects has been realized through the development of a dispensing device including a material reservoir which is improved by the addition of a unique combination of a material outlet or plug means positioned within the neck or sleeve of the material reservoir and which cooperates with a rotatable closure means containing perforations, and which is adapted to be positioned over the plug means in such a manner that, upon rotation of the closure means, the spray intensity of the material being ejected from the reservoir may be adjusted to a particular desired level of intensity.

In the preferred embodiment, the outlet means comprises a plug having an opening therein, said plug being fitted within a generally cylindrical sleeve extending from the material reservoir. Positioned within the plug is an axially extending tubular conduit which conveys material to the plug orifice where it is mixed with an appropriate amount of air and forcibly ejected to the rotatable closure and through a perforation in the closure in the form of a spray. Both the closure and the plug contain cooperating abutment means which, upon rotation of the closure, cooperate to align one of the perforations on the closure with the plug orifice.

In describing the invention, reference will be made to a preferred embodiment illustrated in the accompanying drawings wherein:

FIGURE 1 is an elevational view of a container in which the improved dispensing outlet of the invention is incorporated;

FIGURE 2 is a fragmentary, partially sectioned and enlarged view of the components of the improved spray dispensing outlet of the invention shown in axially separated relationship;

FIGURE 3 is an enlarged, fragmentary and sectionalized view of the improved dispenser outlet shown in FIGURE 1.

FIGURE 4 is a top plan view of the dispenser outlet components of FIGURE 3.

FIGURE 5 is a transverse sectional view illustrating the relationship between the closure opening and associated closure abutment and plug opening and abutment when a fine spray is desired.

FIGURE 6 is a transverse sectional view illustrating the relationship between the closure opening and associated closure abutment and plug opening and abutment when a heavy spray is desired.

FIGURE 7 is an elevational view of a preferred embodiment of the plug employed in the dispensing device of this invention.

As shown in FIGURE 1, a material reservoir **1**, which may comprise a flexible walled container fabricated of plastic material, is provided with a material outlet assembly **2**. As shown in FIGURES 2 and 3, outlet assembly **2** includes sleeve means **3** which has a generally cylindrical configuration. Outlet means comprising a cylindrical plug **4** having an annular rim **5** in abutting relationship with the periphery of sleeve means **3**, is mounted snugly within the sleeve in the manner generally shown in FIGURE 3.

Plug **4** has a cylindrical portion **6** having an outer diameter corresponding closely to the inner diameter of sleeve **3**. As shown, plug **4** is coaxially arranged within sleeve **3** so as to project partially therefrom. The effective securing of the plug **4** within sleeve portion **3** may be facilitated by fabricating the sleeve and/or plug of a slightly yieldable material such as polyethylene or polypropylene, and at tolerances such that the plug may be simply forced axially under slight pressure into the sleeve position shown in FIGURE 3. Other means of securing the plug within the sleeve will readily occur to one skilled in the art. For example, the plug may contain an annular bead which projects radially outwardly from the outer peripheral portion **6**. The bead may then be received within an annular groove formed within the inner cylindrical periphery of sleeve **3**.

The upper end of plug **4** is closed by a transverse wall **7** having an opening comprising air channels **8** and **9** extending from a generally cylindrical mixing chamber **10**. Air channels **8** and **9** admit air to the material reservoir upon release of the pressure developed in expelling the contents of the container. Air may also be admitted to the material reservoir in any of numerous other manners; for example, by employing perforations in the plug and cap at other convenient points.

The spray dispensing device shown in FIGURES 1, 2 and 3 includes a closure or cap **11**. As illustrated, closure **11** is generally cylindrical in configuration and contains a series of perforations **12** and **13** in its upper transverse wall, each perforation being of a different diameter. Closure **11** includes a cylindrical portion **14** adapted to pass or move over plug **4** and to assume the position shown in FIGURE 3 so as to effectively cover transverse wall **7** of

plug **4**. Cap **11** may be fabricated of flexible, semi-rigid or rigid material, such as plastic, metal or rubber.

As shown in FIGURE 3, plug **4** is coaxially and telescopingly arranged within closure **11**. The effective securing of plug **4** within closure **11** may be accomplished through the use of an annular bead **15** which projects radially and inwardly from the cylindrical inner periphery of closure **11**. Bead **15** is forced over a second bead **16** in an axially locking manner, as illustrated in FIGURE 3; bead **16** extending radially outwardly from the outer periphery of plug **4**.

By fabricating the plug and/or closure of a slightly yieldable material such as polyethylene or polypropylene, the closure **11** may be moved into engagement with plug **4** by merely forcing the closure **11** axially over plug **4** until bead **15** engages bead **16** in the manner illustrated in FIGURE 3. In this relationship, the beads **15** and **16** are engaged to such an extent as to provide a nominal axial locking and sealing action but not prevent the relatively free rotation of closure **4**. As will be readily appreciated, this mode of assembly may be varied to a large extent. For example a groove-bead locking mechanism would function almost as effectively. In addition, either component may be fabricated of a relatively rigid or flexibly yieldable material.

The functional components are preferably protected from bacteria and the like by a cap **20** when being shipped, stored or sold, and, in general, when not in use.

The mode of operation of the spray dispensing device becomes readily apparent. A flow of material from within the material reservoir **1** is passed upwardly through a longitudinally or axially extending tubular passage **17** by exerting fingertip pressure to the flexible side walls of the material reservoir. The material is mixed with a suitable amount of air within mixing chamber **10** and is forced out through a perforation in closure **11** which is axially aligned with passage **17** and mixing chamber or orifice **10**. It will be appreciated that the intensity of the spray emerging from the perforation in closure **11** will be governed by the diameter of the particular aligned perforation. Accordingly, the spray intensity may be controlled and varied by simply substituting orifices of different diameter.

The substitution of closure orifices is accomplished through rotation of the closure **11**. When the closure **11** is rotated to the position shown in FIGURE 5, thereby aligning the smaller diameter perforation **12** with mixing chamber **10**, a fine spray is emitted through perforation **12**. On the other hand, when closure **11** is rotated in such a manner as to align larger diameter orifice **13** with mixing chamber **10**, a heavy spray emerges. As pressure is released, air is admitted to the material reservoir **1** through air passages **8** and **9**.

The rotary alignment of orifices **12** and **13** is accomplished in the illustrated embodiment through the interaction of a first abutment means carried by the closure **11** and second abutment carried by plug **4**.

As shown in FIGURES 2, 3, 5 and 6, the closure-carried abutment means comprises a generally rectangular, laterally extending protrusion **18**, projecting radially inwardly from the inner cylindrical surface **14** of closure **11**. The abutment means includes surface means extending generally longitudinally and radially of the cylindrical axis of closure **11**, such as surfaces **18**(*a*) and **18**(*b*).

The plug-carried abutment means comprises a pair of generally rectangular abutment portions **19**(*a*) and **19**(*b*). Each such abutment portion projects laterally outwardly and generally radially from the outer surface of the cylindrical wall **19** of the plug **4**.

With the plug **4** positioned within closure **11**, as illustrated in FIGURES 3, 5, and 6, abutment means **19**(*a*) and surface **18**(*b*), and abutment means **19**(*b*) and surface **18**(*a*) will coact to limit the extent of rotary movement of the closure **11**. For example, engagement between surface **18**(*a*) and abutment **19**(*b*) will properly align smaller diameter perforation **12** with mixing chamber **10**, as illustrated in FIGURE 5; while engagement between surface **18**(*b*) and abutment **19**(*a*) will accurately align larger diameter orifice **13** with mixing chamber **10**, as illustrated in FIGURE 6, thereby causing a heavier spray to emerge from the dispenser.

In describing the structure and operation of the improved spray dispensing mechanism of the invention, the many advantages of the invention become apparent.

A spray dispensing mechanism has been provided by means of which a material may be sprayed at varying intensities by the simple expedient of rotationally manipulating a closure to a preset position.

A spray dispensing device has been provided which is adapted to function as either a heavy or a light spray dispensing device, either of which is positively determined merely through the rotational action of a structurally simple component which, through the utilization of a series of perforations associated with a material mixing chamber, and abutments integral with the components, provides a functionally effective, conveniently fabricated device.

While the invention has been described with reference to a preferred embodiment, it will be readily apparent that its scope is such as to encompass additions, modifications, deletions, substitutions, and other changes without departing from the invention.

What is claimed is:

A spray dispensing device comprising: A material reservoir having an opening therein; a plug associated with said opening and having a mixing orifice in its uppermost end; said plug also having a plurality of air passageways in its upper end; said passageways being rectangular continuations of said mixing orifice that extend laterally outwardly therefrom; said orifice and said passageways providing an area for mixing air and material to be dispensed to produce a spray; said air passageways further being provided to admit air into said reservoir via said plug; said plug further being defined by having a vertical indentation partially around its periphery; and a closure adapted to telescope over at least a portion of said plug and rotatably engage said plug; said closure having a plurality of perforations in its upper end, each of which is adapted to be individually aligned with said mixing orifice by rotation of said closure and each of which when aligned, is capable of delivering a different intensity spray; said closure further having abutment means extending laterally inwardly from the inner cylindrical surface of said closure; said laterally extending means co-acting with the terminal ends of the vertical indentation in said plug to limit rotational movement of said closure and to align said perforations with said mixing orifice.

References Cited by the Examiner

UNITED STATES PATENTS

2,764,453	9/1956	Robb et al.	239—327
2,924,393	2/1960	Robert	222—553 X
3,083,872	4/1963	Meshberg	222—553 X
3,170,633	2/1965	Castelli	239—327

EVON C. BLUNK, *Primary Examiner.*

CHARLES R. CARTER, *Examiner.*