US 20170176106A1

(19) **United States**

(12) **Patent Application Publication** (10) **Pub. No.: US 2017/0176106 A1**

Cooper (43) **Pub. Date: Jun. 22, 2017**

(54) **ROTARY DEGASSERS AND COMPONENTS THEREFOR**

(71) Applicant: **Molten Metal Equipment Innovations, LLC**, Middlefield, OH (US)

(72) Inventor: **Paul V. Cooper**, Chesterland, OH (US)

(21) Appl. No.: **15/449,251**

(22) Filed: **Mar. 3, 2017**

Related U.S. Application Data

(60) Continuation of application No. 14/923,296, filed on Oct. 26, 2015, which is a continuation of application No. 13/973,962, filed on Aug. 22, 2013, now Pat. No. 9,328,615, which is a division of application No. 12/878,984, filed on Sep. 9, 2010, now Pat. No. 8,524,146, which is a continuation-in-part of application No. 12/853,255, filed on Aug. 9, 2010, now Pat. No. 8,535,603.

(60) Provisional application No. 61/240,981, filed on Sep. 9, 2009, provisional application No. 61/232,384, filed on Aug. 7, 2009.

Publication Classification

(51) **Int. Cl.**

F27D 27/00 (2006.01)

F01D 5/18 (2006.01)

(52) **U.S. Cl.**

CPC ***F27D 27/00*** (2013.01); ***F01D 5/18*** (2013.01); *F27D 2027/002* (2013.01)

(57) **ABSTRACT**

Disclosed are degassers, couplings, impeller shafts and impellers for use in molten metal. One such coupling transfers gas into an impeller shaft, the coupling having a smooth, tapered internal surface to align with a corresponding surface on the impeller shaft and help prevent gas leakage and to assist in preventing damage to the impeller shaft. Improved impellers for shearing and mixing gas are also disclosed, as is a degasser including one or more of these components.

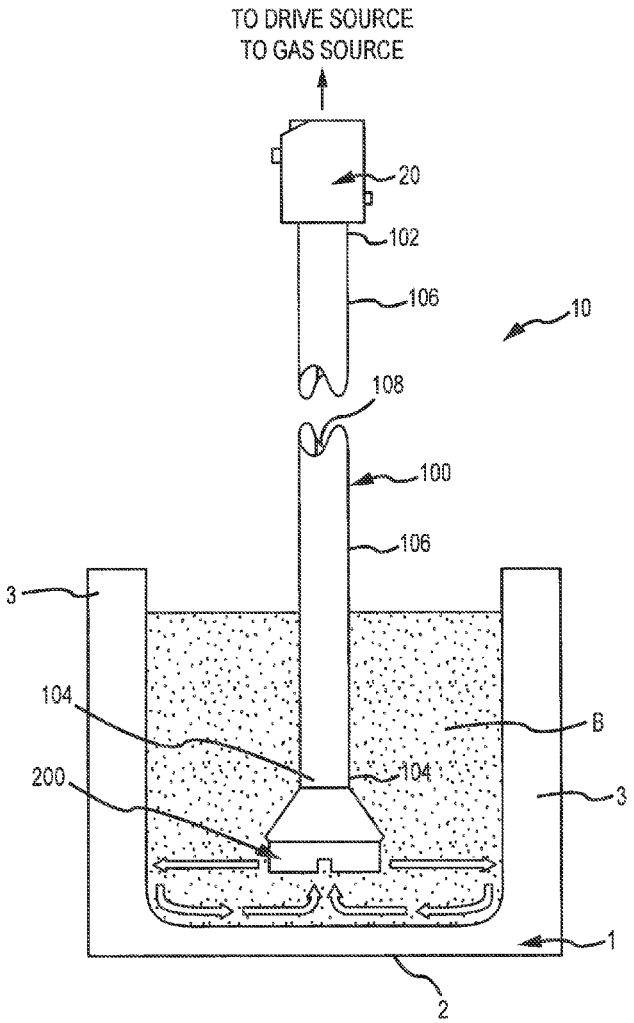

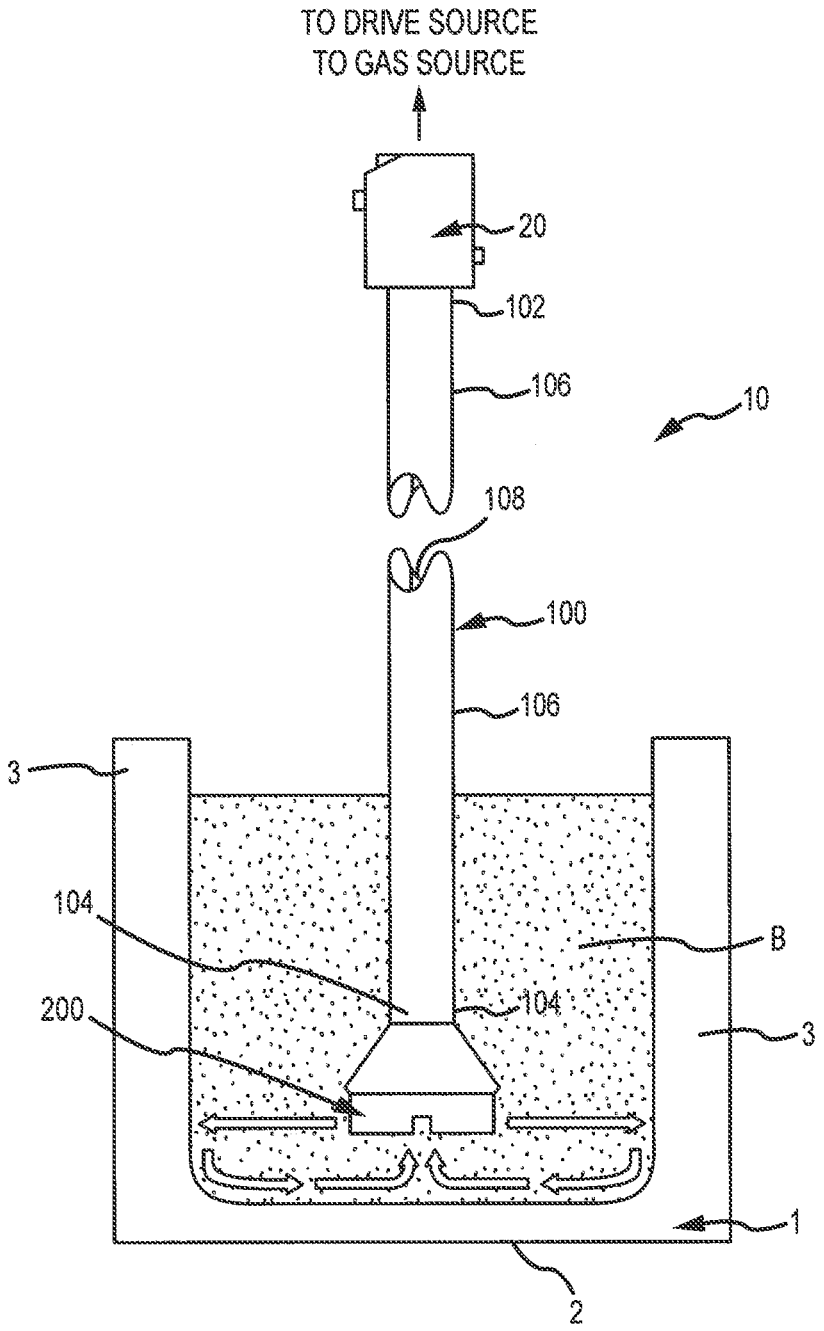
TO DRIVE SOURCE
TO GAS SOURCE
20
102
106
10
108
100
106
3
104
B
200
104
3
1
2

FIGURE 1

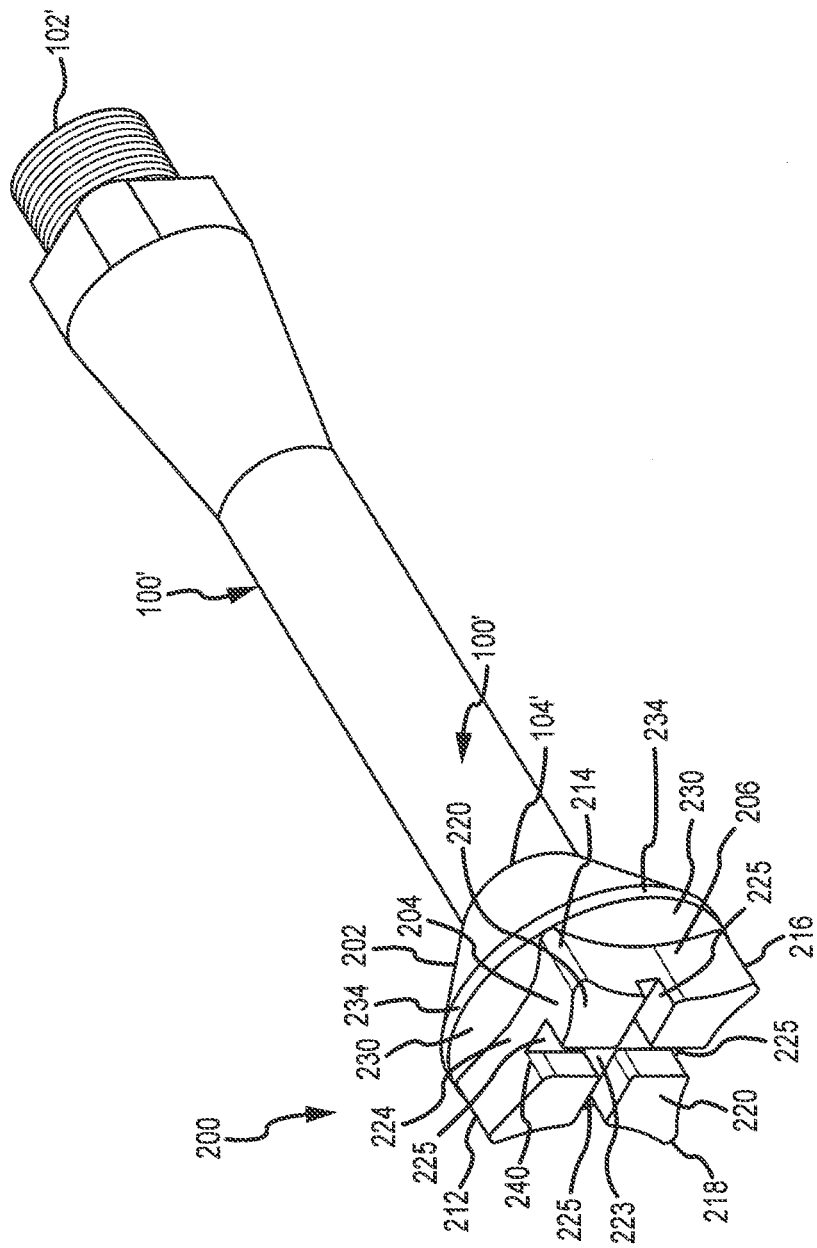
102'
100'
100'
104'
234
214
230
206
220
225
216
204
202
234
230
225
224
225
212
240
225
223
218
220
200

FIGURE 2

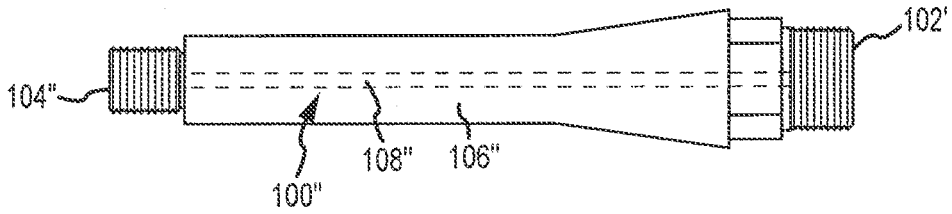

FIGURE 3A

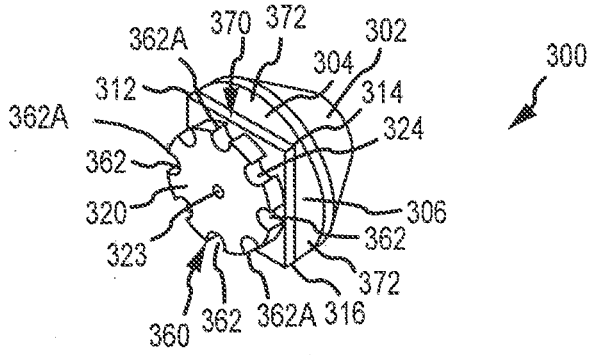

FIGURE 3B

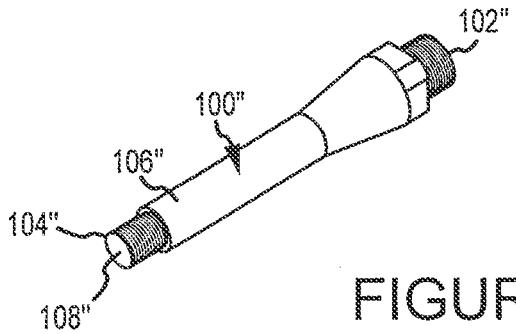

FIGURE 3C

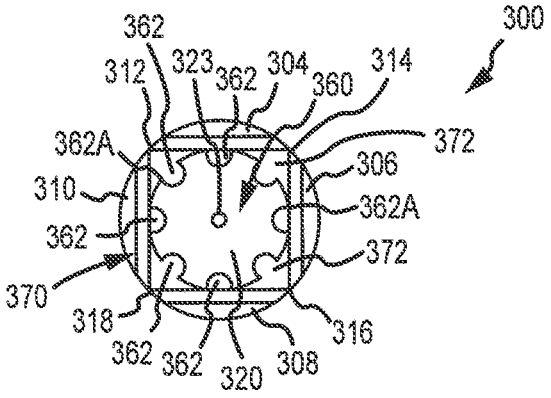

FIGURE 3D

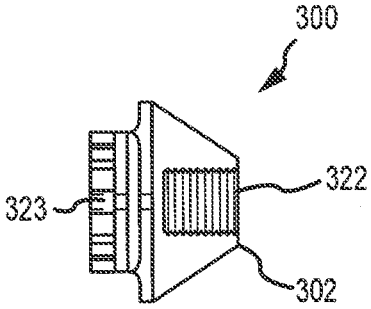

FIGURE 3E

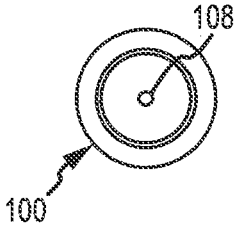

FIGURE 3F

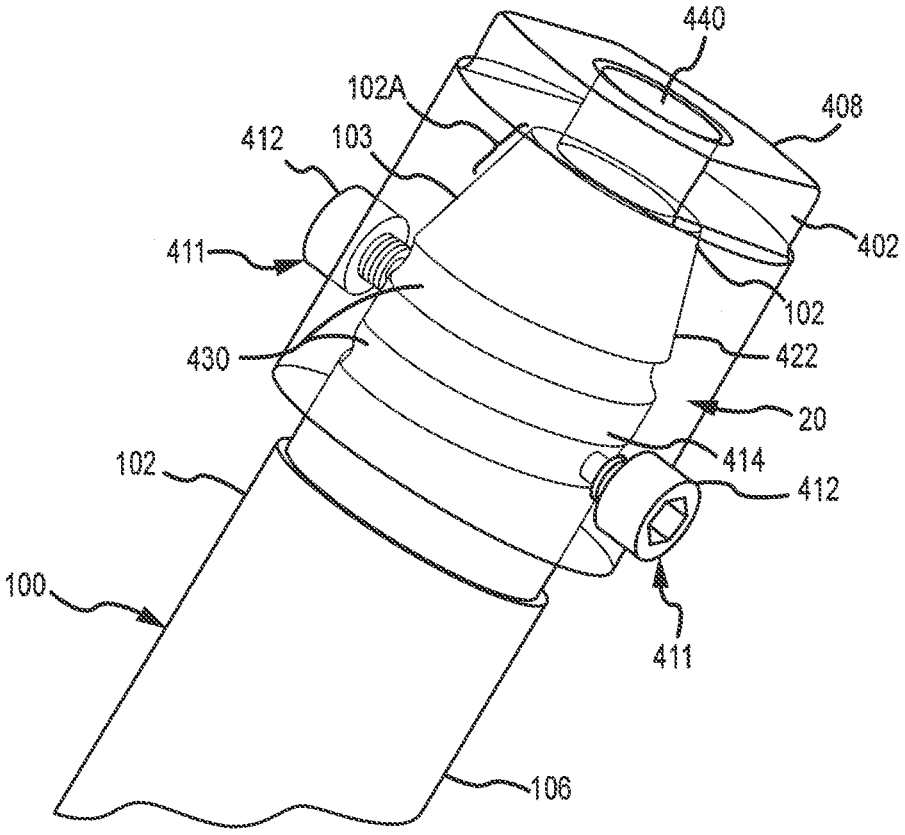
440
102A
408
412
103
411
402
102
430
422
20
414
102
412
100
411
106

FIGURE 4

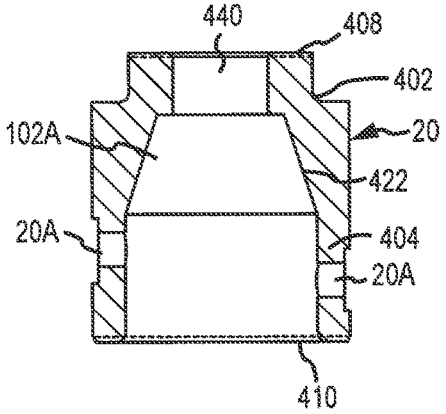

FIGURE 5A

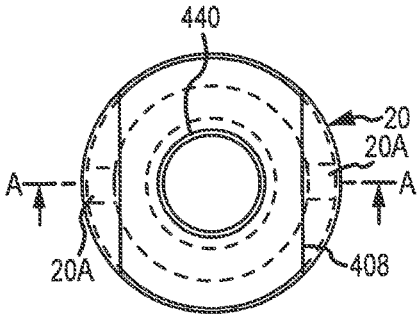

FIGURE 5B

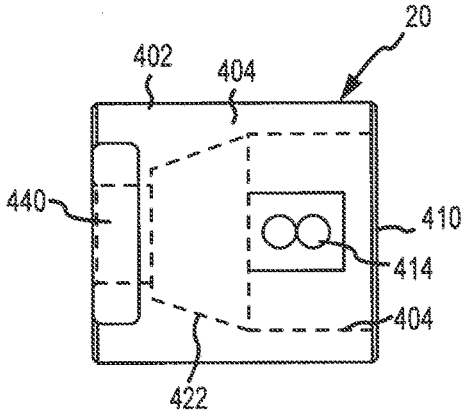

FIGURE 5C

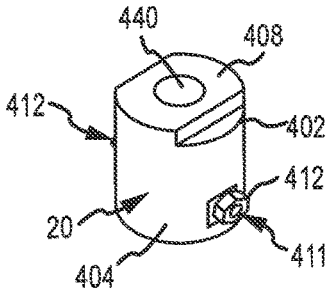

FIGURE 5D

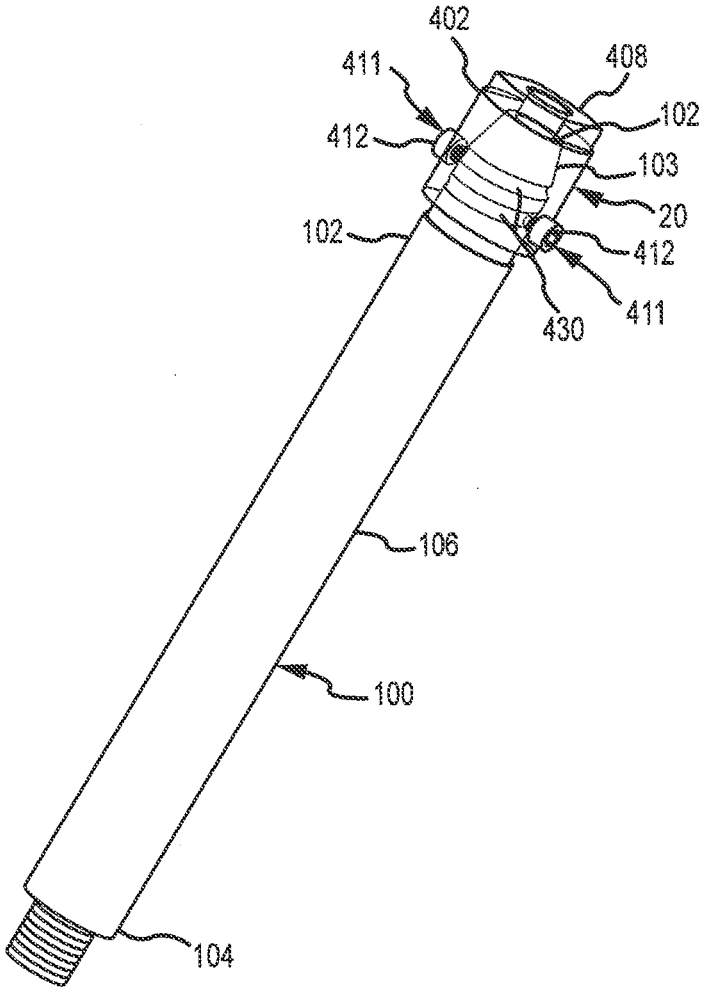

FIGURE 6

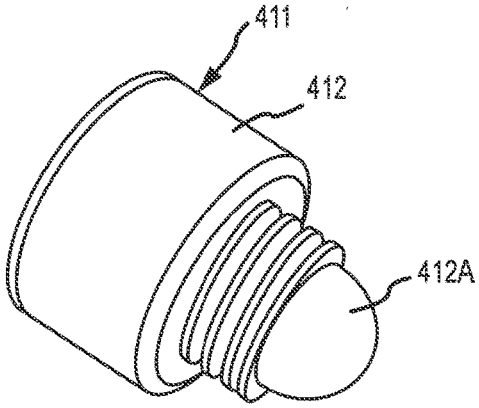

FIGURE 7A

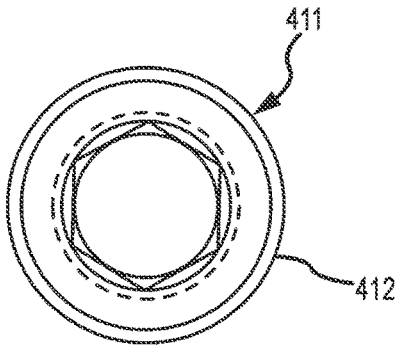

FIGURE 7B

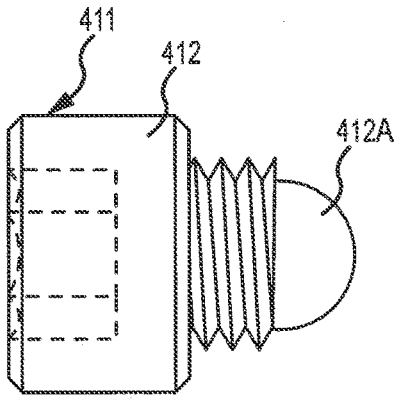

FIGURE 7C

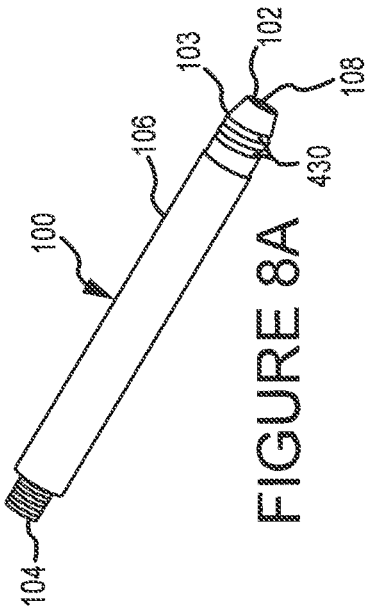

FIGURE 8A

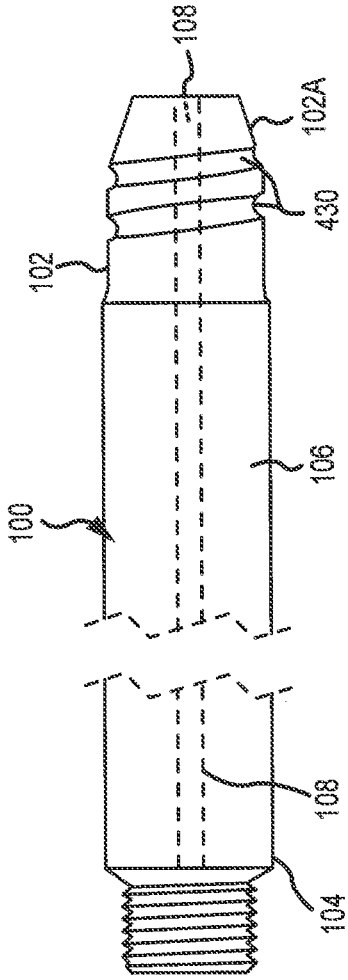

FIGURE 8B

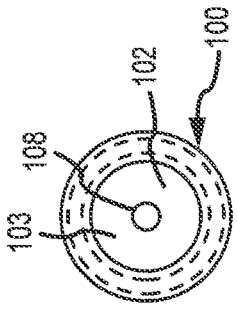

FIGURE 8C

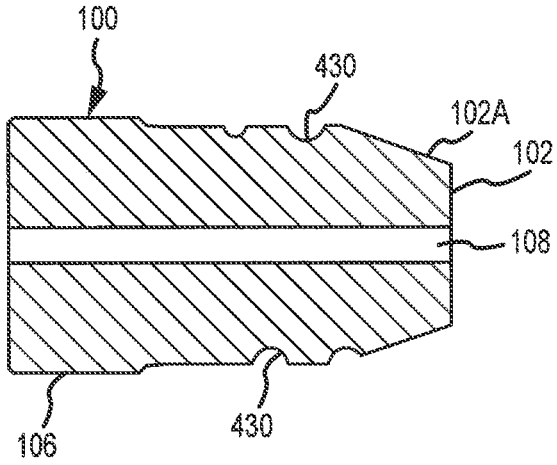

FIGURE 8D

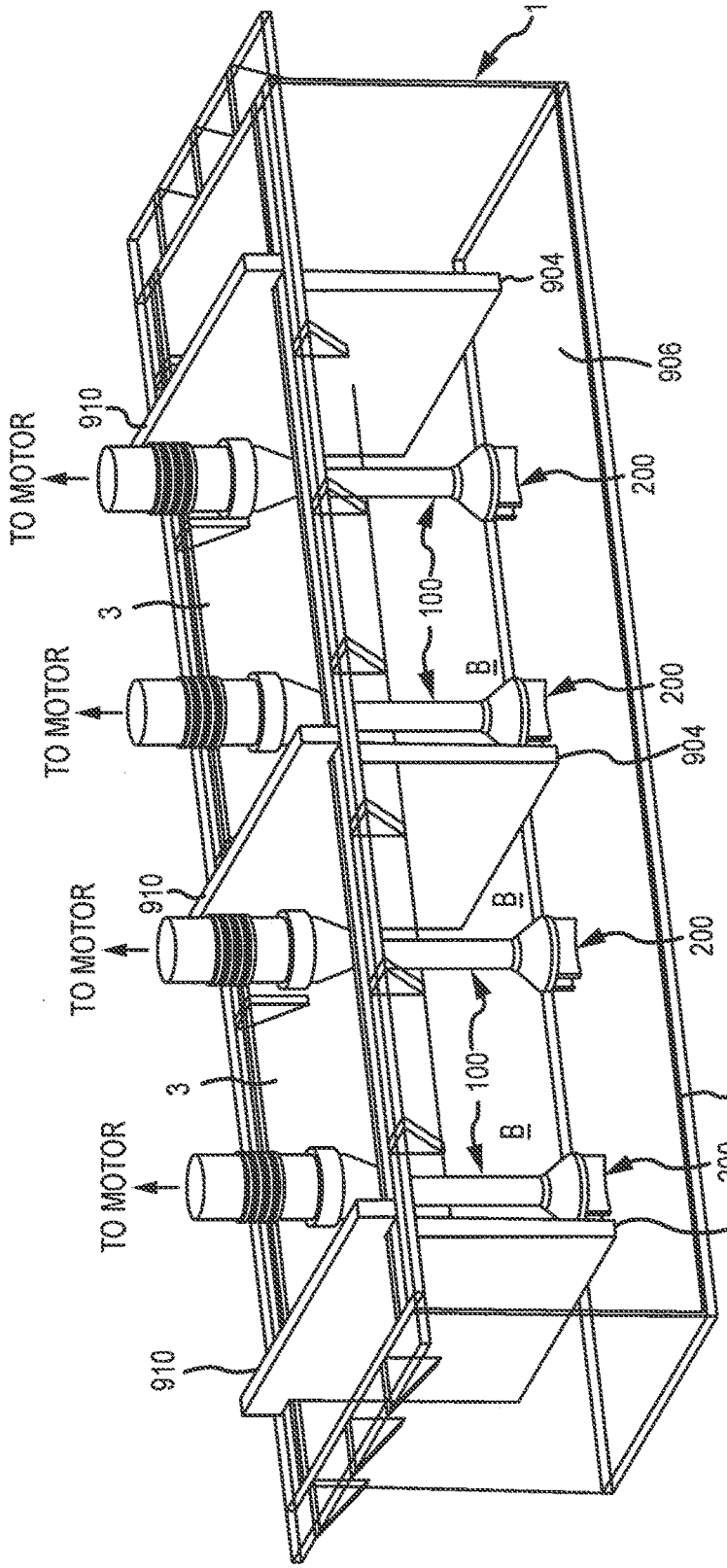
1
904
906
910
TO MOTOR
200
100
3
B
TO MOTOR
200
904
910
TO MOTOR
B
200
100
3
B
2
TO MOTOR
200
904
910

FIG.9

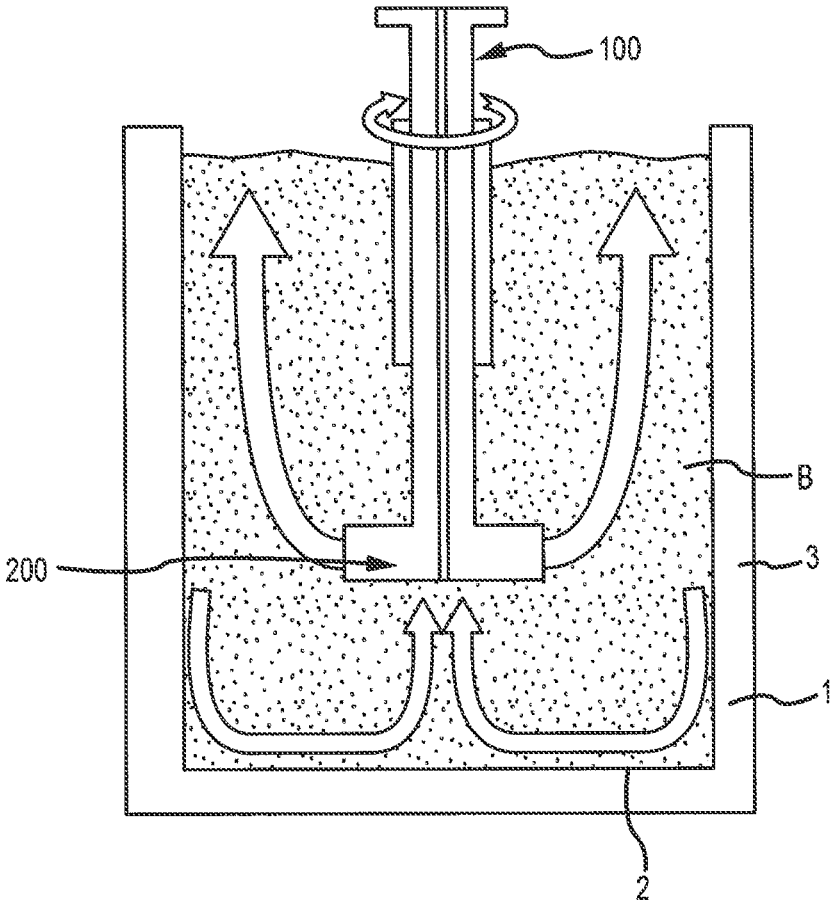

FIGURE 10

ROTARY DEGASSERS AND COMPONENTS THEREFOR

CROSS-REFERENCE TO RELATED APPLICATIONS

[0001] This application claims priority to and is a Continuation Application of U.S. patent application Ser. No. 14/923,296, filed on Oct. 26, 2015, entitled "Rotary Degassers and Components Therefor," and invented by Paul V. Cooper, which is a Continuation Application of U.S. patent application Ser. No. 13/973,962, (Now U.S. Pat. No. 9,328,615), filed on Aug. 22, 2013, entitled "Rotary Degassers and Components Therefor," and invented by Paul V. Cooper, which is a Divisional Application of U.S. patent application Ser. No. 12/878,984, (Now U.S. Pat. No. 8,524,146), filed on Sep. 9, 2010, entitled "Rotary Degassers and Components Therefor," and invented by Paul V. Cooper. Each of the foregoing disclosures of which that are not inconsistent with the present disclosure are incorporated herein by reference. U.S. patent application Ser. No. 12/878,984, (Now U.S. Pat. No. 8,524,146), also claims priority to U.S. Provisional Application No. 61/240,981, filed on Sep. 9, 2009, entitled "Impeller and Degasser Couplings for Molten Metal Devices," and invented by Paul V. Cooper. The drawings and pages 29-35 of Provisional Application No. 61/240,981 are incorporated herein by reference. U.S. patent application Ser. No. 12/878,984, (Now U.S. Pat. No. 8,524,146), is also a continuation in part of and claims priority to U.S. patent application Ser. No. 12/853,255, (Now U.S. Pat. No. 8,535,603), entitled "Rotary Degasser and Rotor Therefor," filed on Aug. 9, 2010, and invented by Paul V. Cooper and which claims priority to U.S. Provisional Patent Application No. 61/232,384 entitled "Rotary Degasser and Rotor Therefor," filed on Aug. 7, 2009. The disclosures of U.S. patent application Ser. No. 12/853,255 and U.S. Provisional Patent Application Ser. No. 61/232,384 that are not inconsistent with the present disclosure are incorporated herein by reference.

FIELD OF THE INVENTION

[0002] The invention relates to couplings, impellers and rotary degassers used in molten metal. One aspect of the invention is an impeller shaft for use with an impeller shaft that transfers gas, wherein the coupling decreases the possibility of impeller shaft breakage, gas leakage and maintenance. Another aspect of the invention is an improved impeller for introducing, and mixing gas with molten metal.

BACKGROUND OF THE INVENTION

[0003] As used herein, the term "molten metal" means any metal or combination of metals in liquid form, such as aluminum, copper, iron, zinc, and alloys thereof. The term "gas" means any gas or combination of gases, including argon, nitrogen, chlorine, fluorine, Freon, and helium, which may be released into molten metal.

[0004] A reverbatory furnace is used to melt metal and retain the molten metal while the metal is in a molten state. The molten metal in the furnace is sometimes called the molten metal bath. Reverbatory furnaces usually include a chamber for retaining a molten metal pump and that chamber is sometimes referred to as the pump well.

[0005] Known pumps for pumping molten metal (also called "molten-metal pumps") include a pump base (also called a "base", "housing" or "casing") and a pump chamber (or "chamber" or "molten metal pump chamber"), which is an open area formed within the pump base. Such pumps also include one or more inlets in the pump base, an inlet being an opening to allow molten metal to enter the pump chamber.

[0006] A discharge is formed in the pump base and is a channel or conduit that communicates with the molten metal pump chamber, and leads from the pump chamber to the molten metal bath. A tangential discharge is a discharge formed at a tangent to the pump chamber. The discharge may also be axial, in which case the pump is called an axial pump. In an axial pump the pump chamber and discharge may be the essentially the same structure (or different areas of the same structure) since the molten metal entering the chamber is expelled directly through (usually directly above or below) the chamber.

[0007] A rotor, also called an impeller, is mounted in the pump chamber and is connected to a drive shaft. The drive shaft is typically a motor shaft coupled to a rotor shaft, wherein the motor shaft has two ends, one end being connected to a motor and the other end being coupled to the rotor shaft. The rotor shaft also has two ends, wherein one end is coupled to the motor shaft and the other end is connected to the rotor. Often, the rotor shaft is comprised of graphite, the motor shaft is comprised of steel, and the two are coupled by a coupling, which is usually comprised of steel.

[0008] As the motor turns the drive shaft, the drive shaft turns the rotor and the rotor pushes molten metal out of the pump chamber, through the discharge, which may be an axial or tangential discharge, and into the molten metal bath. Most molten metal pumps are gravity fed, wherein gravity forces molten metal through the inlet and into the pump chamber as the rotor pushes molten metal out of the pump chamber.

[0009] Molten metal pump casings and rotors usually, but not necessarily, employ a bearing system comprising ceramic rings wherein there are one or more rings on the rotor that align with rings in the pump chamber such as rings at the inlet (which is usually the opening in the housing at the top of the pump chamber and/or bottom of the pump chamber) when the rotor is placed in the pump chamber. The purpose of the bearing system is to reduce damage to the soft, graphite components, particularly the rotor and pump chamber wall, during pump operation. A known bearing system is described in U.S. Pat. No. 5,203,681 to Cooper, the disclosure of which is incorporated herein by reference. U.S. Pat. Nos. 5,951,243 and 6,093,000, each to Cooper, the disclosures of which are incorporated herein by reference, disclose, respectively, bearings that may be used with molten metal pumps and rigid coupling designs and a monolithic rotor. U.S. Pat. No. 2,948,524 to Sweeney et al., U.S. Pat. No. 4,169,584 to Mangalick, and U.S. Patent No. 6,123,523 to Cooper (the disclosure of the afore-mentioned patent to Cooper is incorporated herein by reference) also disclose molten metal pump designs. U.S. Pat. No. 6,303,074 to Cooper, which is incorporated herein by reference, discloses a dual-flow rotor, wherein the rotor has at least one surface that pushes molten metal into the pump chamber.

[0010] The materials forming the molten metal pump components that contact the molten metal bath should remain relatively stable in the bath. Structural refractory materials, such as graphite or ceramics, that are resistant to

disintegration by corrosive attack from the molten metal may be used. As used herein "ceramics" or "ceramic" refers to any oxidized metal (including silicon) or carbon-based material, excluding graphite, capable of being used in the environment of a molten metal bath. "Graphite" means any type of graphite, whether or not chemically treated. Graphite is particularly suitable for being formed into pump components because it is (a) soft and relatively easy to machine, (b) not as brittle as ceramics and less prone to breakage, and (c) less expensive than ceramics.

[0011] Three basic types of pumps for pumping molten metal, such as molten aluminum, are utilized: circulation pumps, transfer pumps and gas-release pumps. Circulation pumps are used to circulate the molten metal within a bath, thereby generally equalizing the temperature of the molten metal. Most often, circulation pumps are used in a reverbatory furnace having an external well. The well is usually an extension of a charging well where scrap metal is charged (i.e., added).

[0012] Transfer pumps are generally used to transfer molten metal from the external well of a reverbatory furnace to a different location such as a launder, ladle, or another furnace. Examples of transfer pumps are disclosed in U.S. Pat. No. 6,345,964 B1 to Cooper, the disclosure of which is incorporated herein by reference, and U.S. Pat. No. 5,203,681.

[0013] Gas-release pumps, such as gas-injection pumps, circulate molten metal while releasing a gas into the molten metal. In the purification of molten metals, particularly aluminum, it is frequently desired to remove dissolved gases such as hydrogen, or dissolved metals, such as magnesium, from the molten metal. As is known by those skilled in the art, the removing of dissolved gas is known as "degassing" while the removal of magnesium is known as "demagging." Gas-release pumps may be used for either of these purposes or for any other application for which it is desirable to introduce gas into molten metal. Gas-release pumps generally include a gas-transfer conduit having a first end that is connected to a gas source and a second submerged in the molten metal bath. Gas is introduced into the first end of the gas-transfer conduit and is released from the second end into the molten metal. The gas may be released downstream of the pump chamber into either the pump discharge or a metal-transfer conduit extending from the discharge, or into a stream of molten metal exiting either the discharge or the metal-transfer conduit. Alternatively, gas may be released into the pump chamber or upstream of the pump chamber at a position where it enters the pump chamber. A system for releasing gas into a pump chamber is disclosed in U.S. Pat. No. 6,123,523 to Cooper. Furthermore, gas may be released into a stream of molten metal passing through a discharge or metal-transfer conduit wherein the position of a gas-release opening in the metal-transfer conduit enables pressure from the molten metal stream to assist in drawing gas into the molten metal stream. Such a structure and method is disclosed in U.S. application Ser. No. 10/773,101 entitled "System for Releasing Gas into Molten Metal", invented by Paul V. Cooper, and filed on Feb. 4, 2004, the disclosure of which is incorporated herein by reference.

[0014] Generally, a degasser (also called a rotary degasser) is used to remove gaseous impurities from molten metal. A degasser typically includes (1) an impeller shaft having a first end, a second end and a passage (or conduit) therethrough for transferring gas, (2) an impeller (also called a rotor), and (3) a drive source (which is typically a motor, such as a pneumatic motor) for rotating the impeller shaft and the impeller. The degasser impeller shaft is normally part of a drive shaft that includes the impeller shaft, a motor shaft and a coupling that couples the two shafts together. Gas is introduced into the motor shaft through a rotary union. Thus, the first end of the impeller shaft is connected to the drive source and to a gas source (preferably indirectly via the coupling and motor shaft). The second end of the impeller shaft is connected to the impeller, usually by a threaded connection. The gas is released from the end of the impeller shaft submersed in the molten metal bath, where it escapes under the impeller. Examples of rotary degassers are disclosed in U.S. Pat. No. 4,898,367 entitled "Dispersing Gas Into Molten Metal," U.S. Pat. No. 5,678,807 entitled "Rotary Degassers," and U.S. Pat. No. 6,689,310 to Cooper entitled "Molten Metal Degassing Device and Impellers Therefore," the respective disclosures of which are incorporated herein by reference.

[0015] Known coupling-to-impeller shaft connections are usually threaded, and gas can seep past the threaded connections, especially after the threads have been worn after operation of the degasser, causing the graphite threads of the impeller shaft to wear. The leaks waste gas, and if caustic gas such as chlorine is used, the gas can interact with nearby steel causing the steel to oxidize as well as releasing the caustic chlorine gas into the atmosphere creating an environmental hazard.

[0016] Another problem with conventional devices is that broken or worn impeller shafts are difficult to remove. The impeller shafts, also called "shafts," "degasser shafts," or "degasser impeller shafts," herein, are usually formed of graphite, silicon carbide or some combination thereof. The impeller shafts are typically connected to a coupling by a threaded connection wherein an internal cavity of a collar of the coupling is threaded and the external surface of the impeller shaft is threaded, and threadingly received in the internal cavity of the coupling. Stress is placed on the impeller shaft as it rotates and the shaft is weakened by the threads, so the impeller shaft tends to eventually break, and it typically breaks just below the coupling and the end still threaded into the coupling must be chiseled out, which is time consuming.

[0017] Another known way to couple an impeller shaft to a steel motor drive shaft is by threadingly connecting it to a threaded projection extending from the drive shaft. The projection comprises a threaded outer surface that is received in a threaded bore of the graphite impeller shaft. In this case, the single connection serves to both transfer torque to the impeller shaft and to create a gas-tight seal with a threaded bore in the impeller shaft. The impeller shaft is hollow, having an internal bore through which gas is transferred ultimately into the molten metal bath. Although this design allows for relatively easy removal of the impeller shaft if the shaft breaks, the impeller shaft is not supported or aligned by a coupling and the impeller shaft tends to wobble and the graphite threads in the bore wear quickly. As the fit loosens, the impeller shaft becomes more eccentric in its movement, i.e., it wobbles more, and eventually breaks.

[0018] One attempt to solve the problems associated with coupling a graphite shaft to a steel drive shaft is shown in U.S. Pat. No. 5,203,681 to Cooper entitled "Submersible Molten Metal Pump." This reference discloses a two-piece clamp held in position by a through bolt. Shafts retained by

this clamp must include a cross axial bore to allow the bolt to pass through the shaft. This structure would not be used by one skilled in the art to couple a hollow shaft that functions as a gas-transfer conduit because gas could leak from the holes formed as part of the cross axial bore.

[0019] Further, many conventional devices do not adequately mix the gas being introduced into the molten metal. The gas can become trapped in a pocket within the impeller or rotor, or is otherwise not properly dispersed into the molten metal. Additionally, if rotated too fast in order to more thoroughly mix the gas and molten metal, "cavitation" can occur. Cavitation is when essentially a whirlpool is created that pulls air from the surface into the molten metal. This causes oxidation at the surface of the bath and slag or other impurities may be formed.

SUMMARY OF THE INVENTION

[0020] In accordance with the invention a rotary degasser for introducing gas into molten metal is disclosed. In one embodiment the degasser comprises: (1) an impeller (or degasser) shaft including a first end for connecting to a coupling without the use of threads and an internal passage that transfers gas; (2) an impeller coupled to a second end of the impeller shaft, wherein the impeller comprises: at least one impeller opening communicating with the impeller shaft passage, and the opening allows gas to escape into the molten metal under the impeller and enter at least one channel in the bottom of the impeller where it is directed to at least one cavity, which is preferably defined in part by a curved side of the impeller; and (3) a coupling having a collar that receives the first end of the impeller shaft and retains it without a threaded connection. The impeller shaft is preferably connected to a drive source by the coupling and the drive source turns the impeller shaft and the impeller. The impeller thereby displaces the molten metal while simultaneously gas is introduced into the molten metal through the opening.

[0021] An impeller of the invention may include at least a top surface and one cavity defined by a curved impeller side surface (or portion) juxtaposed an edge or other shearing structure. In the preferred embodiment, the distance from the center of each curved impeller side surface is closer to a center of the impeller than the distance from each of the shearing structures to the center of the impeller. One or more channels may be formed in the bottom surface of the impeller, wherein each channel extends from the opening in the bottom of the impeller to the center of a respective cavity. There may be four channels, wherein each extends to the center of a respective cavity. The impeller is preferably threadingly received onto the second end of the impeller shaft.

[0022] In one embodiment a coupling configured to be connectable to an impeller shaft preferably comprises an inner surface defining a smooth tapered, wall, and (2) at least one opening to receive a retention device, such as a set screw. An impeller shaft according to the invention is preferably not threadingly coupled to the coupling, so the coupling need not include threads.

[0023] Another impeller according to the invention has at least one cavity in a first vertical position and at least one cavity in a second vertical position, wherein the second vertical position is above the first vertical position. Preferably, there is a plurality of cavities in each of the two vertical positions. Each cavity is juxtaposed an edge, or other shearing structure. The impeller includes a gas release opening for allowing gas to escape under the impeller. At least some of the gas then enters the first and/or second cavity(ies), where it is mixed with molten metal as the rotor rotates. This impeller thus has two stages at which gas can be mixed with the molten metal.

[0024] Both the forgoing general description and the following detailed description are exemplary and explanatory only and are not restrictive of the invention as claimed. The accompanying drawings, which are incorporated in and constitute a part of this specification, illustrate embodiments of the invention and together with the description serve to explain the principals of the invention and not to limit the scope of the invention.

BRIEF DESCRIPTION OF THE DRAWINGS

[0025] FIG. **1** is a perspective view of one embodiment of a rotary degasser according to the invention.

[0026] FIG. **2** is a perspective view of an impeller and impeller shaft according to one embodiment of the present invention.

[0027] FIGS. **3**A-**3**F are views of an alternate embodiment of an impeller and impeller shaft according to the invention.

[0028] FIG. **4** depicts one embodiment of a coupling/impeller shaft connection according to the invention.

[0029] FIGS. **5**A-**5**D depicts alternative views of the coupling shown in FIG. **4**.

[0030] FIG. **6** depicts an embodiment of the coupling/impeller shaft connection as shown in FIG. **4**, but showing the entire impeller shaft.

[0031] FIGS. **7**A-**7**C depicts an embodiment of a set screw according to the invention.

[0032] FIGS. **8**A-**8**D depict an impeller shaft according to one embodiment of the invention.

[0033] FIG. **9** depicts a plurality of rotary degassers according to the invention separated by dividers in a molten metal bath.

[0034] FIG. **10** depicts the flow of molten metal and gas mixture utilizing a rotary degasser according to the invention.

DETAILED DESCRIPTION OF PREFERRED EMBODIMENTS

[0035] Reference will now be made in detail to the present exemplary embodiments of the invention, examples of which are illustrated in the accompanying drawings. FIG. **1** depicts a gas-release device **10** according to the invention. Device **10** is adapted to operate in a molten metal bath B contained within a vessel **1**. Vessel **1** includes a bottom **2** and side walls **3**. Vessel **1** may have any suitable size, shape, and configuration.

[0036] The exemplary rotary degasser **10** includes an impeller shaft **100** (also shown are shafts **100'** and **100"**), an impeller **200** and a coupling **20** for coupling the impeller shaft to the motor shaft of a drive source (not shown). Impeller shaft **100**, impeller **200**, and each of the impellers used in the practice of the invention, are preferably made of graphite impregnated with oxidation-resistant solution, although any material capable of being used in a molten metal bath, such as ceramic, or non-impregnated graphite could be used. Oxidation and erosion treatments for graphite parts are practiced commercially, and graphite so treated can be obtained from sources known to those skilled in the art.

[0037] The drive source can be any structure, system, or device capable of rotating shaft **100** and impeller **200** and is preferably a pneumatic motor or electric motor, the respective structures of which are known to those skilled in the art. The drive source can be connected to impeller shaft **100** in any suitable manner, but is preferably indirectly connected by a motor shaft that is connected to one end of coupling **20**, whereas the other end (or collar) of coupling **20** is connected to a first end **102** of the impeller shaft **100**. The motor shaft is preferably comprised of steel, comprises an inner passage for the transfer of gas, and is preferably in communication with a rotary union, which releases gas from a gas source into the motor shaft, as is known by those skilled in the art. A typical rotary union is a rotary union of the type described in U.S. Pat. No. 6,123,523 to Cooper, filed Sep. 11, 1998, the disclosure of which from page 9, line 21 to page 10, line 23, and FIGS. **4** and **4**D, are incorporated herein by reference.

[0038] As is illustrated in FIGS. **1**, **4** and **6**, shaft **100** comprises a first end **102**, a second end **104**, a sidewall **106** and an inner passage **108** for transferring gas. Shaft **100** may be a unitary structure or may be a plurality of pieces connected together. The purpose of shaft **100** is to connect to an impeller to (1) rotate the impeller, and (2) transfer gas to the bottom surface of the impeller. Any structure capable of performing these functions can be used in conjunction with the present invention.

[0039] A preferred embodiment of the shaft **100** at end **102** is shown in FIGS. **4** and **6**. In this embodiment, first end **102** (which is received in coupling **20**) is tapered. It also comprises at least one groove **430** for receiving at least one retainer **411**. In this exemplary embodiment, the groove **430** in shaft **100** is helical and extends along the shaft **100** such that preferably two or more retainers **411** (and preferably as many as four although any number may be used) can engage the groove at different positions to retain impeller shaft **100**. As used herein with respect to end **102** of impeller **100**, "groove" means any recess, indentation or structure designed to receive a retainer.

[0040] The tapered portion **102**A of end **102** of the impeller shaft **100** aligns with an internal, tapered portion **422** of coupling **200**, as seen in FIGS. **4**, **5**A and **5**C. This alignment helps prevent gas from escaping between the tapered portion **102**A of the impeller shaft **100** and the interior, tapered portion of the coupling **422**. The groove **430** could extend onto the tapered portion **102**A of the shaft **100**, but it is preferred that the groove does not extend onto portion **102**A, since it may then weaken end **102**. The impeller shaft **100** is preferably threaded at second end **104** for being threadingly connected to impeller **200**, although second end **104** may be configured to couple with the impeller **200** in any suitable manner.

[0041] An embodiment of a coupling according to the present invention is shown in FIGS. **4-6**. Coupling **20** vertically and rigidly couples a motor shaft to an impeller shaft, such as impeller shaft **100**. Referring to FIG. **5**, coupling **20** is preferably a one-piece coupling incorporating two coupling members, first member **402** and second member **404**. Member **402** can be any structure designed to connect to and receive suitable driving force from a motor shaft. In the preferred embodiment, coupling **402** is designed to receive a motor shaft (which is preferably cylindrical and/or keyed), within the opening **440** formed in the member **402**. The motor shaft may be retained within the opening **440** in any suitable manner, such as by using set screws **412** positioned in apertures **20**A of the coupling **20** (not shown) spaced about the circumference of member **402**. In such a configuration, the set screws can be tightened against motor shaft to help retain shaft within the opening **440**.

[0042] Second coupling member **404** (best seen in FIGS. **5**A-**5**C) is configured to receive the impeller shaft **100** through opening **410**. The coupling member **404** may engage the impeller shaft **100** in any suitable manner. In the present exemplary embodiment, one or more retainers **411** (which may include bosses, bolt-retention devices, cap screws or set screws **412**) engage the shaft **100** through apertures **20**A.

[0043] In one embodiment, referring now to FIGS. **7**A-**7**C, each of two retention devices **411** comprises a set screw **412** that aligns with an aperture **20**A formed in coupling member **404**. Each set screw **412** is tightened to engage the shaft **100**, preferably by using a tool, such as an Allen wrench, in order to secure shaft **100** in second coupling member **404**. The threaded portion of each screw **412** preferably interfaces with corresponding threads around the aperture **414**. The portion of each screw **412** that engages the impeller shaft **100** may be any size, shape, and configuration to retain the impeller shaft **100** within the coupling **20**. In the exemplary embodiment depicted in FIGS. **7**A-**7**C, the end of each set screw **412** is sized, shaped, and configured to engage a groove **430** formed in the surface of the impeller shaft **100**.

[0044] When end **102** (as shown in FIGS. **8**A-**8**D) is received in bore **404**, tapered portion **103** of the impeller shaft **100** is received into the tapered portion **422**. When these tapered, generally smooth surfaces align, the close fit helps to prevent gas leakage and helps to center the shaft **100** and reduce shaft vibration.

[0045] Turning now to FIGS. **2** and **3**A-**3**E, embodiments of impeller **200** are shown. Impeller **200** is designed to displace a relatively large quantity of molten metal and thoroughly mix the gas being released into the molten metal. Therefore, impeller **200** can, at a slower speed (i.e., lower revolutions per minute (rpm)), mix the same amount of gas with molten metal as conventional devices operating at higher speeds. Impeller **200** can preferably also operate at a higher speed at which it would mix more gas and molten metal than conventional devices operating at the same higher speed.

[0046] By operating impeller **200** at a lower speed less stress is transmitted to the moving components, which leads to longer component life, less maintenance and less downtime. Another advantage that may be realized by operating the impeller at slower speeds is the elimination of a vortex. Some known devices must be operated at high speeds to achieve a desired efficiency. This can create a vortex that draws air into the molten metal from the surface of bath B. The air can lead to metal ingots and finished parts that have air pockets, which is undesirable and/or to the formation of dross. As shown by the arrows in FIG. **10**, for example, the impeller **200** of the present invention circulates gas throughout the molten metal bath B as it rotates without creating a vortex.

[0047] In one embodiment, impeller **200** comprises a top surface **202**, sides **204**, **206**, **208** (not shown) and **210** (not shown) corners **212**, **214**, **216** and **218**, and a lower surface **220**. Impeller **200** is preferably imperforate, rectangular and most preferably square in plan view, with sides **204**, **206**, **208** and **210** being preferably equal in length. It also is possible that impeller **200** could be triangular, pentagonal, or

otherwise polygonal in plan view. A connector (not shown) is formed in top surface **202**. The connector is preferably a threaded bore that extends from top surface **202** to lower surface **220** and terminates in gas-release opening **223**, though the impeller **200** can be connected to the shaft **100** in any suitable manner.

[0048] This exemplary impeller **200** includes one or more cavities **224** defined in part by each of curved sides **204**, **206**, **208** and **210**, which are beneath upper surface **230**. Each cavity **224** is preferably symmetrical about the center of its respective side (**204**, **206**, **208**, or **210**), although one or more of the cavities could be formed off center from its respective side. The cavities need not be identical to each other as long as gas escaping through the gas-release opening enters each cavity where it is ultimately mixed with the molten metal entering the cavity. The invention could function with fewer than or more than four cavities **224**. Additionally, the cavities may be formed in any portion of impeller **200**, rather than being formed at 90-degree intervals by the sides (**204**, **206**, **208**, or **210**) as shown in FIG. **2**. Additionally, a cavity may have any suitable size, shape, and configuration.

[0049] In the present exemplary embodiment, each cavity preferably comprises an identical structure, therefore only one cavity **224** shall be described. Cavity **224** is partially defined by concave side surface **204**, wherein the distance from the center of the curved surface **204** is closer to a center of the impeller **200** than the distance from ends (**212**, **214**) of the curved surface **204** to the center of the impeller **200**. Cavity **224** is further defined by upper surface **230**. In the present exemplary embodiment, surface **230** of the impeller **200** is substantially flat and circular as viewed from the bottom of the impeller **200**.

[0050] The impeller **200** may comprise one or more channels **225** in the bottom surface **220** of the impeller **200**. The channels **225** may be any size, shape, and configuration. In the present exemplary embodiment, the device comprises four channels **225**, one that extends to in each of the four side cavities.

[0051] The edges, such as edges **212**, **214**, **216** and **218**, act as sheering surfaces to break apart gas bubbles into smaller bubbles as the rotor **200** rotates. The impeller **200** is threadingly received onto the impeller shaft. A lip **234** is formed between top wall **230** and top surface **202**; lip **234** preferably comprises a minimum width of one quarter of an inch. Lower surface **220** comprises edges **240** juxtaposed each of the recesses **224**. The impeller **200** is comprised of a heat resistant material such as graphite or ceramic.

[0052] In one embodiment, the second end **104** of shaft **100** is preferably connected to impeller **200** by threading end **104** into a connector (not shown) on the impeller. If desired, shaft **100** could be connected to impeller **200** by techniques other than a threaded connection, such as by being cemented, pinned or in any other suitable manner. The use of coarse threads (4 pitch, UNC) facilitates manufacture and assembly. The threads may be tapered.

[0053] Upon placing impeller **200** in molten metal bath B and releasing gas through passage **108**, the gas will be released through gas-release opening **223** and at least some will flow outwardly through the channels **225** in lower surface **220**, and into each cavity.

[0054] As impeller **200** turns, the gas in each of cavities **224** mixes with the molten metal entering the cavity and this mixture is pushed outward from impeller **200**. The released gas will also be sheared into smaller bubbles as they are struck by a shearing surface when rotor **200** rotates.

[0055] By using impeller **200**, high volumes of gas can be mixed with the molten metal at relatively low impeller speeds. Unlike some conventional devices that do not have cavities, the gas cannot simply rise past the side of the impeller **200**. Instead at least some of the gas enters the cavities **224** and is mixed with the molten metal.

[0056] An alternate, impeller **300** is shown in FIGS. **3**A-**3**F. Impeller **300** is preferably imperforate, formed from graphite and connected to, and driven by, a shaft such as shaft **100** or shaft **100"**. Impeller **300** further includes a connective portion **304**, which is preferably a threaded bore, but can be any structure capable of drivingly engaging shaft **100**.

[0057] Impeller **300** includes two sets of cavities, wherein each set is at a different vertical position, that can capture gas and mix it with molten metal. Thus, impeller **300** is a two-stage impeller with respect to mixing gas and molten metal. Impeller **300** comprises a top surface **302**, a bottom surface **320**, a first stage **360** and a second stage **370**. First stage **360** includes a plurality of cavities **362** wherein each cavity is juxtaposed by at least one edge, or other shearing structure, **362**A.

[0058] Impeller **300** also has a second stage **370** that includes four sides **304**, **306**, **308** and **310** four corners **312**, **314**, **316** and **318**, and cavities **372**. Impeller **300** is preferably imperforate, and rectangular (and most preferably square in plan view, with sides **304**, **306**, **308** and **310** being preferably equal in length). It also is possible that impeller **300** could be triangular, pentagonal, or otherwise polygonal in plan view. A connector **322** is formed in top surface **302**. The connector is preferably a threaded bore that extends from top surface **302** to lower surface **320** and terminates in gas-release opening **323**, though any other suitable connector may be used.

[0059] One or more cavities **372** are formed in part by sides **304**, **306**, **308** and **310**. Each cavity **372** is preferably symmetric about the center of its respective side, although one or more of the cavities could be formed off center. Further, the invention could function with fewer than or more than the cavities shown. Additionally, the cavities may be formed in any suitable portion of impeller **300** and may be of any suitable size, shape, or configuration.

[0060] An impeller **300** rotates, gas is released through opening **323** and at least some of the gas enters the one or more cavities **362** and the one or more cavities **372**. The respective edges, or other shearing structures **362**A and **372**A break the gas into smaller bubbles as rotor **300** rotates thereby helping to disperse the gas into the molten metal.

[0061] Referring now to FIG. **9**, any number of molten metal degassers of the present invention, as described above, may be employed in a molten metal bath B. In this exemplary embodiment, a plurality of degassers are disposed in a molten metal bath B separated by dividers **910**. The dividers **910** may be made out of any suitable heat resistant material. In the preferred embodiment they are made from the same material as the walls of the molten metal bath B. The dividers **910** may be any suitable size, shape, and configuration and may partially or completely separate portions of the vessel **1**. In one embodiment, the dividers **910** couple to the top surface of the molten metal bath B; however, the dividers **910** may couple to any wall of the vessel **1** such as a side wall **3**, bottom surface **2**, or be suspended by an

alternative support structure. The dividers **910** may be coupled to the vessel **1** in any suitable manner, such as by pressure fitting, cementing, clamping, welding, and/or being formed as part of the vessel. The dividers **910** are may be positioned in various locations within the vessel **1** or bath B. In some embodiments the placement of the dividers **910** may travel the entire length of the vessel **1** (they may be placed in any position) and may be repositioned into a different location with ease. The dividers **910** may divide each degasser, two degassers or more than two degassers. Any suitable number of dividers **910** may be implemented. Multiple dividers **910** may be made of different materials, different dimensions and sizes, and may comprise different openings for molten metal to pass through.

[0062] As shown in FIG. **9**, there is preferably no gap between the sides of the divider **910** and the side walls **3** of vessel **1**, as the divider **910** runs the entire width of the molten metal bath. In this embodiment, there is a gap between the bottom surface **906** of the molten metal bath B to the bottom most edge **904** of divider **910** to allow molten metal to flow between the chambers.

[0063] Having thus described some embodiments of the invention, other variations and embodiments that do not depart from the spirit of the invention will become apparent to those skilled in the art. The scope of the present invention is thus not limited to any particular embodiment, but is instead set forth in the appended claims and the legal equivalents thereof. Unless expressly stated in the written description or claims, the steps of any method recited in the claims may be performed in any order capable of yielding the desired result.

What is claimed is:

1. A shaft that cannot be threadingly connected to a corresponding coupling for use in a rotary degasser, the shaft comprising:

a first end, a second end, an outer sidewall, and an inner passage for transferring gas, wherein the first end is tapered and not threaded, and one or more grooves that are not threads formed adjacent the tapered first end; wherein the shaft is configured to be received in the corresponding coupling so that the tapered first end mates with an inner tapered portion in the coupling, and one or more retainers are received in the coupling such that each is positioned to be pressed against one of the one or more grooves, in order to apply driving force from the coupling to the shaft; wherein the shaft has a outer portion between the first end and the second end and the one or more grooves is between the center portion and the tapered part of the first end.

2. The shaft of claim **1** that has a plurality of grooves.

3. The shaft of claim **2** wherein the grooves are not vertically aligned.

4. The shaft of claim **1** wherein the at least one groove is vertical.

5. The shaft of claim **1** wherein the at least one groove is circular.

6. The shaft of claim **2** wherein at least two of the plurality of grooves are each configured to align with an opening on the coupling.

7. The shaft of claim **1** wherein the second end of the shaft is threaded.

8. The shaft of claim **6** wherein the second end of the shaft is configured to threadingly connect to a rotor.

9. The shaft of claim **1** wherein the taper is at an angle between 20° and 45°.

10. The shaft of claim **1** wherein the one or more grooves are not vertically aligned.

11. The shaft of claim **1** wherein the one or more grooves is a helical groove.

* * * * *