Aug. 4, 1959 J. W. KENNEDAY ET AL 2,897,896

SEATING MEMBER FOR WELL TOOLS

Filed Aug. 12, 1955

FIG. 1.

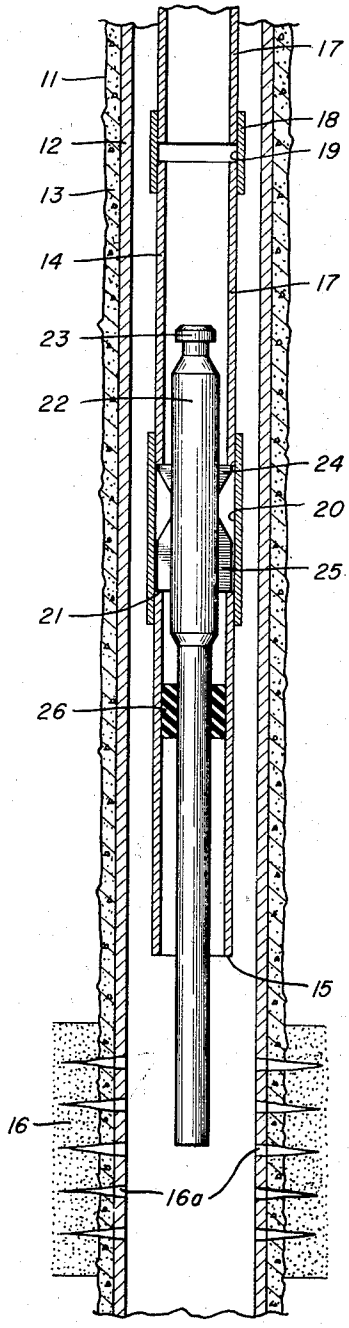

FIG. 2.

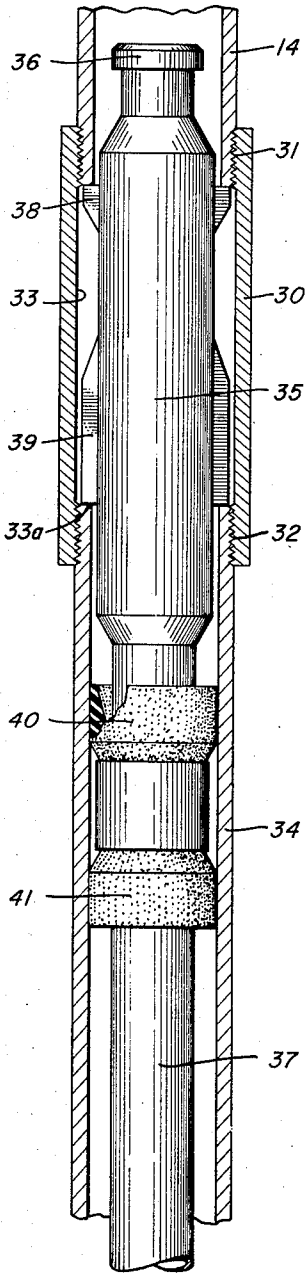

FIG. 3.

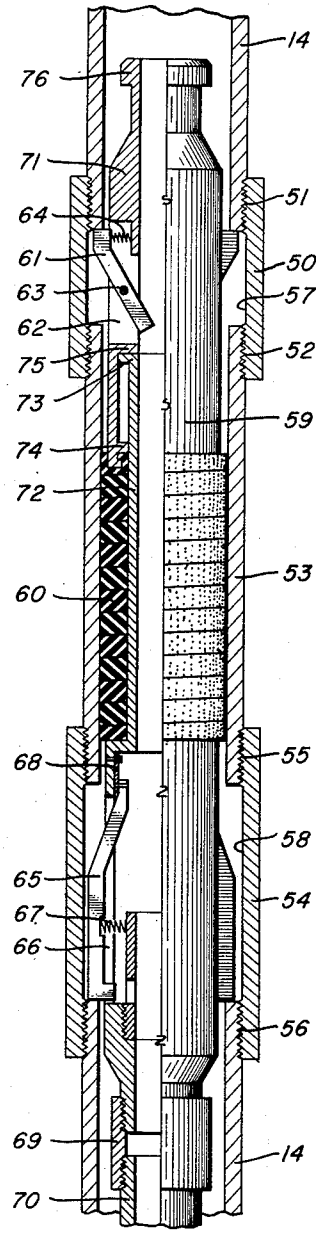

INVENTORS.
John W. Kenneday,
James R. Dublin, III,

BY

ATTORNEY.

United States Patent Office 2,897,896
Patented Aug. 4, 1959

2,897,896

SEATING MEMBER FOR WELL TOOLS

John W. Kenneday and James R. Dublin III, Houston, Tex., assignors, by mesne assignments, to Jersey Production Research Company, Tulsa, Okla., a corporation of Delaware

Application August 12, 1955, Serial No. 528,004

3 Claims. (Cl. 166—134)

The present invention may be briefly described as a removable seating member for well tools. More particularly, the invention may be described as a device for seating in a well pipe providing a full opening well pipe when removed. In its more specific aspects, the invention has to do with a seating member which may be seated in a well pipe such as a tubing at a predetermined level in the well.

The present invention may be briefly described as a removable seating member for arrangement in a well pipe wherein the well pipe is made up of a plurality of sections interconnected by coupling members. The well pipe has provided therein at a predetermined level in the well a recess of a greater length than the spaces between pipe sections in the coupling members and of a diameter greater than that of the pipe. Seatable in the recess which provides a seating surface is a removable mandrel which is provided on its exterior surface with latching or locking means which are biased outwardly such that on arrangement or lowering of the releasable seating member in the well pipe the locking or latching means will seat only in the recess and will not seat in the spaces between the pipe sections in the couplings. The mandrel carries means for sealing between the mandrel and the pipe and may have attached thereto a tubular extension member which may form part of the mandrel. The upper end of the mandrel is suitably provided with a fishing means, such as a fishing neck, for lowering the mandrel in the well and for retrieving same from the well.

The packing or sealing means arranged on the mandrel may comprise a plurality of opposing cup packers which are forcible into sealing engagement with the interior wall of the pipe by fluid pressure or may comprise a compressible, deformable or resilient member which is compressed or deformed into sealing engagement with the interior wall of the pipe by providing a telescopic section in the mandrel which on telescoping of the section will cause compression of the sealing means into sealing engagement.

The sealing means may be arranged below the locking or latching means or it may be arranged between a plurality of latching means.

The present invention is of considerable utility in that it allows and provides a full-opening bore in a well tubing pipe and the like. This is important in the so-called permanent well completion wherein the tubing is arranged permanently in the well for the productive life of the well with the lower open end of the tubing arranged at a level above a plurality of hydrocarbon productive intervals, sands, zones, formations, strata, and the like, such that all recompletion and servicing operations may be performed through the tubing, using a tubular extension member for treating the several overlying productive intervals and using tools lowerable through the tubing for conducting operations, such as gun perforating, and the like. Heretofore tools which were lowerable through

the tubing had to be made of a diameter somewhat less than the diameter of the tubing in view of the necessity of providing a restriction in the lower open end of the tubing on which to seat the tools. In accordance with the present invention, a seating member is seatable adjacent the lower open end of the tubing without the necessity of restricting the flow area or passage area.

The present invention will be further illustrated by reference to the drawing in which:

Fig. 1 is a sectional schematic view illustrating the seating member of the present invention in a well;

Fig. 2 is a partial sectional view of one embodiment of the invention showing the use of cup packers; and

Fig. 3 is a partial sectional view of another embodiment showing a compressible packing element.

In the drawing identical numerals will be employed to designate identical parts.

Referring now to the drawing and particularly to Fig. 1, numeral 11 designates a well bore drilled from the earth's surface, not shown, to penetrate a plurality of overlying productive earth intervals which may be separated one from the other by non-productive intervals. Arranged in the well 11 is a casing 12 which has been cemented in place with primary cement job 13. A tubing string 14 is arranged in the well with its lower open end 15 arranged at a level above the uppermost productive interval 16 of a plurality of productive intervals, not shown. As shown, the casing 12 and the formation 16 have previously been perforated to provide perforations 16*a*. The tubing string 14 is comprised of a plurality of sections 17 which are interconnected by coupling members 18 which provide a space 19 between the pipe sections 17.

Adjacent the lower end and forming part of the tubing string 14 is a recess 20 which provides a seating surface 21. The recess 20 may be suitably formed by employing an elongated collar which may be two collars held together by a smooth bore spacing nipple. It is understood that the recess so provided may be located or situated anywhere in the tubing string. In any event, the recess 20 has a length substantially in excess of the length of the spaces 19 between the pipe sections 17 and has a diameter greater than the diameter of the tubing string 14.

Run into the tubing string 14 is a tubular mandrel 22 having a fishing neck 23 on its upper end and provided with a plurality of latching dogs 24 and 25. The latching dogs 24 and 25 are spring biased outward such that they automatically extend outwardly when they enter the recess 20 and the seating surface 21. The latching dog 24 prevents upward movement and the latching dog 25 prevents downward movement of the tubular mandrel 22 after the dogs enter the recess 20. Attached to the mandrel on its outer surface is a sealing or packing means 26 which form a seal between the mandrel and the interior wall of the tubing string 14. The mandrel 22 suitably is constructed to extend below the lower open end of the tubing 15 a sufficient distance to reach at least one of the plurality of hydrocarbon productive intervals to allow treating of same with fluid cement, aqueous media, such as fresh and salt water, acid, and other fluid media used in oil and/or gas well completion operations.

It will be seen from the foregoing description taken with Fig. 1 that when the tubular mandrel 22 is removed from the tubing 14 that a full opening bore is provided through the tubing string 14 allowing the lowering of well tools therethrough only slightly less in diameter than the inner diameter of the tubing string 14. This is advantageous in that heretofore it was necessary to restrict the inside diameter of the tubing string 14 which re-

sulted in making well tools of smaller sizes than was desirable.

Referring now to Fig. 2 a tubing string 14 has an elongated coupling 30 attached therein by mating threads 31 and 32. The elongated coupling provides a recess 33 and seating surface 33*a*.

Smooth bore nipple 34 is located in the tubing string 14 below the coupling 30. Arranged in the tubing 14 by lowering on a wire line, not shown, is a tubular mandrel 35 provided on its upper end with a fishing neck 36 for engagement with a wire line fishing tool and having a full-opening bore through the mandrel 35. The lower end of the mandrel may be provided with a tubular extension member 37 which is of sufficient length to extend to a particular level in the well where it is desired to treat a particular productive interval. The mandrel is provided with spaced apart locking means or latching members 38 and 39 which are designed to seat only in the recess or seating surface 33. The upper latching member or dogs 38 prevent upward movement of the mandrel 35, whereas the lower latching dogs 39 prevent downward movement. It is to be noted that the lower locking dogs 39 have a length longer than the length of the recess in the regular coupling between the sections of pipe making up the tubing string 14.

Arranged on the mandrel 35 below the dogs 38 and 39 are a plurality of packing elements, such as opposing cup packers 40 and 41. The packing means 40 is designed to be engaged with the interior wall of the tubing 14 and particularly the interior wall of the smooth bore nipple 34 by pressure exerted above the mandrel 35, whereas the lower packing means 41 is designed to engage with the inner wall of the smooth bore nipple 34 by pressure exerted from below the mandrel 35.

The upper and lower latching dogs 38 and 39 are suitably spring-biased outwardly by means, not shown, and may be disengaged by lowering a suitable tool on a wire line having a probe thereon which will cause the latching dogs to be pivoted inwardly and retracted for retrieving of the mandrel 35.

Referring now to Fig. 3, a tubing string 14 has a first coupling member 50 attached thereto by mating threads 51 and 52. A polish nipple 53 is attached to the coupling 50 by mating threads 52 and to an elongated collar 54 by mating threads 55. The elongated collar 54 is connected to and forms part of the lower end of the tubing string 14 by mating threads 56 but may be arranged elsewhere in the tubing string. The standard collar 50 defines a recess 57 of a normal length while the elongated collar 54 provides a recess and seating surface 58 of a length greater than that of the recess 57.

Lowerable on a wire line, not shown, is a mandrel 59 having a collapsible packing element 60 arranged on its exterior surface. The mandrel 59 is also provided with a plurality of upper seating dogs 61 arranged in a slot 62, connected to the mandrel 59 by pins 63, and biased outwardly by biasing means or springs 64. Upper seating dogs 61 snap into position in the recess formed by collar 50 to hold the packer element 60 in compression.

A plurality of lower locking dogs 65 are arranged in slots 66 on the mandrel 59 and these latching dogs 65 are biased outwardly by springs 67. The dogs 65 may suitably be attached to the mandrel 59 by resilient attaching means 68.

Connected to the lower end by a collar 69 and forming the lower end of the mandrel 59 is a tubular extension member 70 which is designed to project at least in part from the lower end of the tubing 14 as shown more particularly in Fig. 1.

The mandrel 59 is suitably constructed in an upper section 71 and a lower section 72 which is telescoped in the upper section 71. The lower section 72 is provided with an outwardly projecting shoulder 73 on its upper end which is designed to engage with an inwardly projecting shoulder 74 on the section 71 and with a shoulder 75 on the upper section 71.

When the device of Fig. 3 is lowerable on a wire line attached to the fishing neck 76, the packing element 60, which may be in a helical form, is held in tension and does not seal with the inner wall of the tubing 14 but when the device is seated on the seated surfaces 57 and 58 and the wire line is slacked off, the packing element 60 is collapsed into compression by setting down the section 71 forming a seal between the tubing string 14 and the mandrel 59.

While the device of the present invention has been shown with respect to using a tubing extension, it may be provided as a seating means for bottom hole chokes, bottom hole regulators, and the like.

In operation, the seating assembly is lowered on a wire line through the tubing string such that the lower locking dogs having a length longer than the recess or space in a standard coupling may not expand until they reach the predetermined level in the well of the elongated coupling. At this point, the lower locking dogs are expanded by springs into the elongated coupling and the upper locking dogs will be spring-biased to engage the upper shoulder of the elongated coupling connection or the upper recess, as the case may be. The cup-type packers when used in the smooth bore form an expansible seal against applied pressures. When a compressible packer is used setting down weight on or jarring of the movable assembly compresses the packing into sealing engagement and dogs 61 snap out and abut against the lower edge of tubing string 14 to hold the packer in compression. When it is desired to remove the assembly, the fishing neck on the upper end of the assembly is engaged by a wire line fishing tool having a prong which extends into the bore of the assembly to counter the spring of the upper locking dogs and cause them to retract. On upward pull the tapered upper shoulder of the lower locking dogs contact the tubing string wall and cause retraction of the lower locking dogs and allow the unit to be retrieved upwardly through the tubing string.

Where a telescopic member is used, downward jarring telescopes the mandrel to collapse the packing element to seat the upper locking dogs.

The nature and objects of the present invention having been completely described and illustrated, what we wish to claim as new and useful and to secure by Letters Patent is:

1. In combination: a well pipe comprising a plurality of tubular sections interconnected by first coupling members of given length and a second coupling member of length substantially greater than said given length; said second coupling member forming with the tubular sections coupled together thereby a landing recess greater in length than the recesses between adjacent pairs of the pipe sections above said second coupling member, and coupled together by coupling members of said given length said landing recess having an outer diameter at least as great as the outer diameter of said well pipe tubular sections; a removable mandrel insertable into said well pipe; locking means movably arranged on said mandrel; means on said mandrel biasing said locking means outwardly of said mandrel; said locking means being of greater length than and adapted to slide past the recesses between adjacent pairs of pipe sections above said second coupling member to enter said landing recess; said locking means including a downwardly facing shoulder adapted to engage the upper edge of the lower of the tubular sections coupled together by said second coupling member, to stop downward movement of said mandrel through said tubing; and expansible sealing means carried by the mandrel for sealing between the mandrel and the pipe.

2. A seating member adapted to be inserted into and removed from a well pipe, said well pipe being made up of a plurality of tubular sections interconnected by cou-

pling members and provided with an annular recess of greater length than the spaces between the pipe sections in the coupling members and of a diameter at least equal to the outer diameter of the pipe, the annular recess being adapted to be located at a predetermined depth in a well, said annular recess having an upwardly facing shoulder, said seating member comprising: a mandrel having upper and lower telescoping sections; locking means arranged on the lower section of said mandrel; biasing means connected to said mandrel adapted to bias said locking means outwardly from said mandrel; said locking means being adapted to slide downwardly through the well pipe past the spaces between the pipe sections in said coupling members to enter the annular recess in the pipe; said locking means having a shoulder adapted to engage the upwardly facing shoulder of the annular recess to stop downward movement of the mandrel through the pipe; and compressible packing means helically wound on the lower section of said mandrel and engaging the upper section such that telescoping said upper and lower sections compresses the packing means into sealing engagement with the pipe.

3. A seating member adapted to be inserted into and removed from a well pipe, said well pipe being made up of a plurality of tubular sections interconnected by coupling members and provided with first and second annular recesses of greater length than the spaces between the pipe sections in the coupling members, and of a diameter at least equal to the outer diameter of the pipe, said second recess being of greater length than said first annular recess having a downwardly facing shoulder and said second recess having an upwardly facing shoulder, said seating member comprising: a tubular mandrel having upper and lower telescoping sections; a first locking section vertically connected to the upper section of the mandrel and a second locking member connected to the lower section of the mandrel, said first locking member having an upwardly facing shoulder adapted to engage said downwardly facing shoulder of said first recess, and said second locking member having a downwardly facing shoulder adapted to engage the upwardly facing shoulder of said second recess, said first and second locking members being adapted to slide past the spaces between the tubular well pipe sections above said first and second recesses, said first and second locking members further being respectively adapted to enter said first and second recesses; biasing means connected to said mandrel adapted to bias said locking members outwardly into engagement with the well pipe and into the first and second recesses; and compressible packing means helically wound on the lower section of said mandrel and engaging the upper section such that telescoping said upper and lower sections together compresses the packing means into sealing engagement with the pipe.

References Cited in the file of this patent

UNITED STATES PATENTS

1,827,842	Getty	Oct. 20, 1931
2,055,515	Yarbrough	Sept. 29, 1936
2,160,357	Hammer	May 30, 1939
2,297,044	Barker et al.	Sept. 29, 1942
2,673,614	Miller	Mar. 30, 1954
2,798,559	Fredd	July 9, 1957