L. E. ALLISON.

LOOSE LEAF BINDER EXTENSION.

APPLICATION FILED AUG. 15, 1918.

1,344,971. Patented June 29, 1920.

Fig. 1.

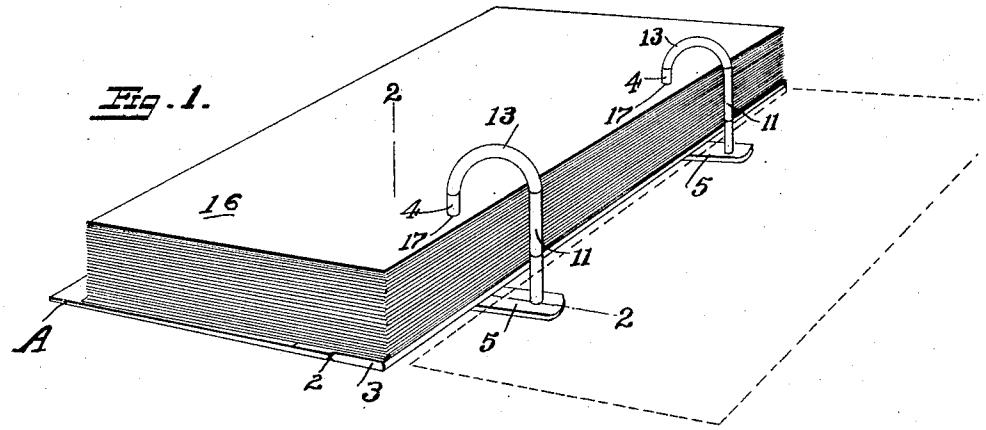

Fig. 2.

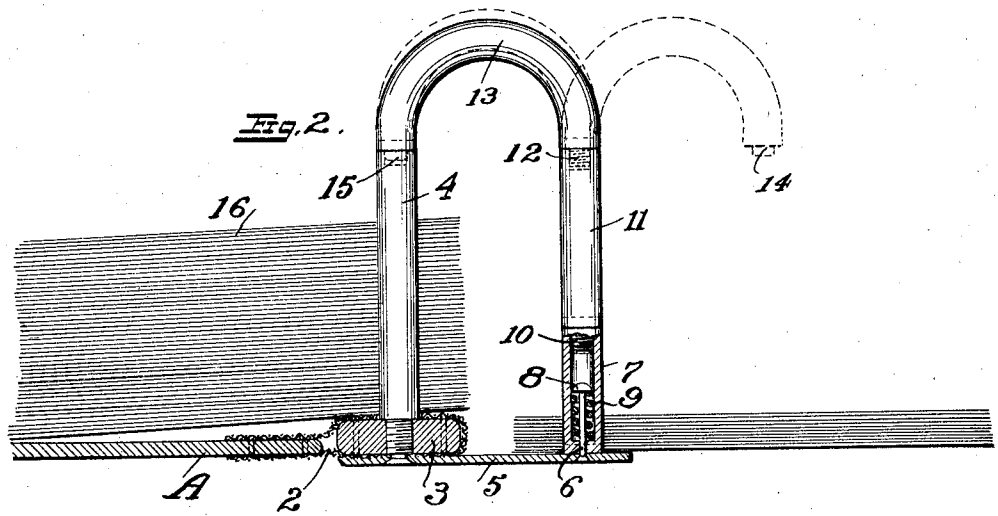

Inventor.
L. E. Allison.
By Strong & Townsend.
Attorneys.

UNITED STATES PATENT OFFICE.

LAWRENCE E. ALLISON, OF MODESTO, CALIFORNIA.

LOOSE-LEAF-BINDER EXTENSION.

1,344,971. Specification of Letters Patent. Patented June 29, 1920.

Application filed August 15, 1918. Serial No. 249,947.

To all whom it may concern:

Be it known that I, LAWRENCE E. ALLISON, a citizen of the United States, residing at Modesto, in the county of Stanislaus and State of California, have invented new and useful Improvements in Loose-Leaf-Binder Extensions, of which the following is a specification.

This invention relates to loose leaf binders, and particularly to binder extensions for sectional post loose leaf ledger binders.

One of the objects of the present invention is to provide a simple extension for top or end locking sectional post loose leaf ledger binders which may be readily applied to any binder regardless of size, and which renders said ledgers flat surfaced and easy to handle.

Another object of the invention is to provide a device of this character in which the removal or insertion of leaves may be quickly and easily accomplished, and in which slotted leaves may be entirely eliminated.

Further objects will hereinafter appear.

The invention consists of the parts and the construction and combination of parts as hereinafter more fully described and claimed, having reference to the accompanying drawings in which—

Figure 1 is a perspective view of a loose leaf ledger showing the application of the invention.

Fig. 2 is an enlarged side elevation partly in section.

Referring to the drawings in detail, A indicates the base of a loose leaf ledger to which is hingedly secured, as at 2, a cross bar 3. Secured to the bar is a pair of leaf supporting posts 4, and also secured to the bar 3 by means of the posts 4 is a pair of extending arms 5. Secured on the outer end of each arm 5 is a pin 6, and slidably mounted on each pin in a vertical direction is a post 7. The pins 6 extend within the post 7 as shown in Fig. 2, and the upper end of each pin is provided with a head 8 to permit the insertion of coiled springs 9. The posts 7 due to the tension of the springs 9 are normally held in the depressed position shown in Figs. 1 and 2, or in contact with the outer ends of the arms 5. They may, however, be moved vertically upon the pins 6 by exerting an upward pull, as will hereinafter be described.

Formed in the upper end of each post and internally thereof is a threaded section 10, and adapted to be screwed into said threaded section is an extension post 11. The upper end of each extension post 11 is also internally threaded as shown at 12, and it is, therefore, possible to apply a goose neck extension such as shown at 13 to form a connection between the posts 4 and 11. Each goose neck is provided with a threaded projection which adapts each goose neck to be screwed into its respective post 11. The opposite end of each goose neck is, however, provided with a plain projection shown at 14, which is adapted to be received by a recess 15 formed in the upper end of each post 4. The posts 4 secured to the cross bar 3 are provided for the purpose of receiving the leaves 16 of the ledger. These leaves are merely perforated as shown at 17 to pass over the posts and practically any number desired as extension posts such as at 11 may be added, both to the posts 11 and the posts 4.

The goose necks 13 will at all times form a connection between the respective posts, and it is therefore, possible to pass the leaves from one post to the other as shown in Fig. 2 when the ledger is being used, and it can also be seen that a flat surface is provided on either side of the ledger when the leaves are turned.

In actual operation if it is desired to insert or remove leaves it is only necessary to grasp the goose necks 13 and pull the same in a vertical direction. The pull thus exerted will cause the extension posts 11, and also posts 7 attached thereto, to move upwardly on the pins 6 against the tension of the springs 9. This upward movement brings the projecting ends 14 of the respective necks out of the pockets formed in the upper ends of the posts 4. It is then possible to turn the goose necks into the dotted line position shown in Fig. 2. As the posts 7 are freely turnable about the pins 6, new leaves may, therefore, be readily added or removed without resorting to the necessity of employing slotted leaves such as are now commonly employed, and, which might readily become torn or otherwise defaced.

The simplicity of the structure involved permits the device to be attached to any ledger regardless of size, as it is only necessary to fasten the arms 5 in any suitable manner to the cross bar 3. The simplicity of construction furthermore renders the device, as a whole, simple to operate, and fur-

thermore provides a ledger which at all times presents a flat surface to be worked upon.

While specific means is here shown for attaching the arms 5 and the posts 7, I wish it understood that this construction, together with the materials and finish of the several parts employed, may be such as the experience and judgment of the manufacturer may dictate and varying conditions may require.

Having thus described my invention, what I claim and desire to secure by Letters Patent is:

1. A binder extension for loose leaf ledgers and the like consisting of a base having a bar hinged along one edge, parallel arms having one end fixed to the bar and projecting outwardly therefrom, vertical posts projecting upward from the bar and locking the bar and arms together, said arms having upwardly extending pins at the outer ends, tubular posts slidable on the pins, and springs to normally hold the tubular posts down, extensions of said posts, and semicircular arches having one end secured to said extensions and having the opposite ends formed to enter sockets in the upper ends of the posts extending up from the bar.

2. In a loose leaf binder extension of the character described, a base plate having a bar hinged to one edge, parallel arms extending outwardly from said bar, posts extending up from said bar and serving to secure the arms and bar together, pins projecting from the outer ends of the arms, tubular posts slidably fitting said pins, springs by which the posts are normally held down, extensions of said posts parallel with the first named posts, and arched connections having one end secured to the said post extensions and the opposite ends with a socket connection to the bar attached posts, said arches and the tubular posts being disengaged and turnable with relation to the socket posts by compression of the springs and lifting the extension posts.

In testimony whereof I have hereunto set my hand in the presence of two subscribing witnesses.

LAWRENCE E. ALLISON.

Witnesses:
C. C. PARKS,
ALFRED BIESEMEIER.