Feb. 5, 1929. 1,700,842

D. D. GORDON

SNAP SWITCH

Filed March 23, 1927

Fig. 1

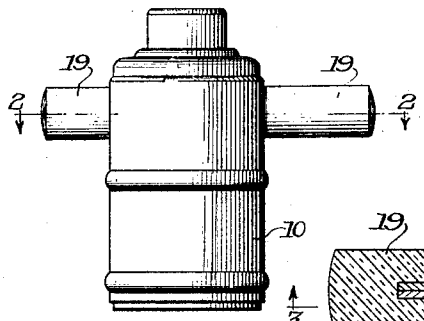

Fig. 2

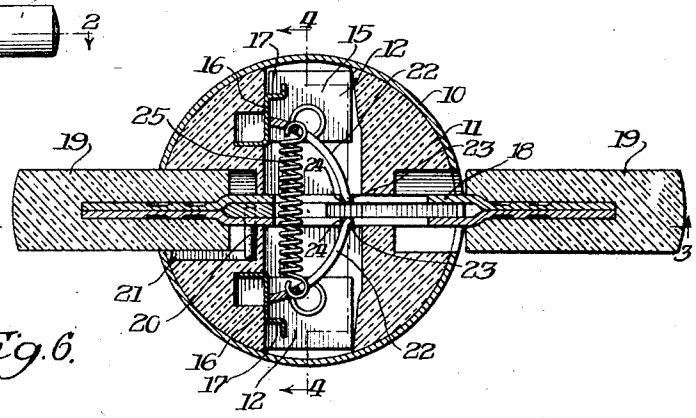

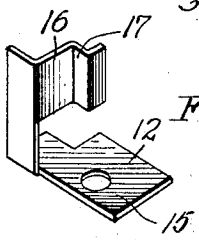

Fig. 6.

Fig. 4

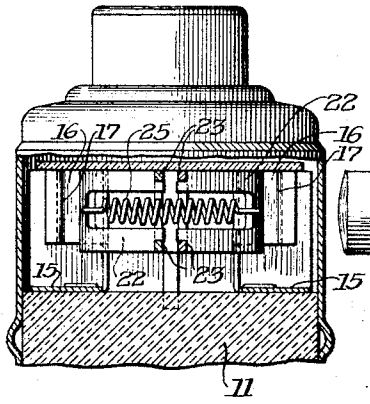

Fig. 3

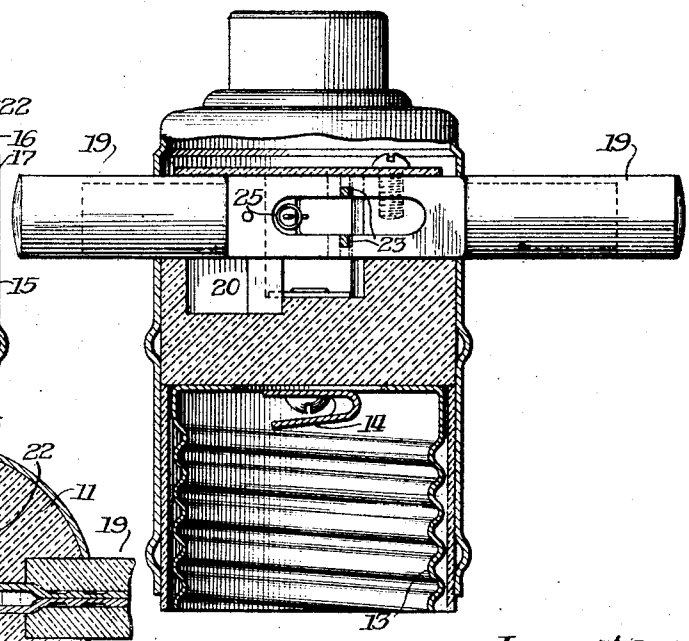

Fig. 5

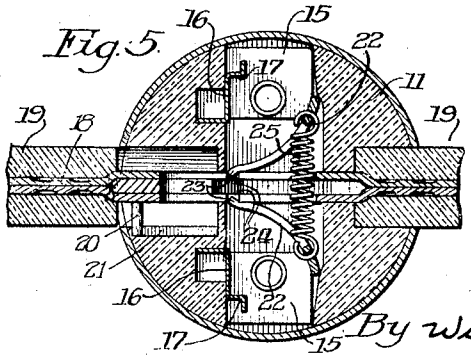

Inventor
David D. Gordon.

By Wilkinson, Huxley, Byron & Knight
Attys

Patented Feb. 5, 1929. 1,700,842

UNITED STATES PATENT OFFICE.

DAVID D. GORDON, OF CHICAGO, ILLINOIS, ASSIGNOR TO ECONOMY FUSE AND MANUFACTURING COMPANY, OF CHICAGO, ILLINOIS, A CORPORATION OF NEW YORK.

SNAP SWITCH.

Application filed March 23, 1927. Serial No. 177,482.

The present invention relates to snap switches.

The invention has been illustrated and will be described in connection with switches of relatively small size such as may be mounted within the ordinary light socket. It will be understood, however, that the invention is not limited to electric light socket switches, but has a much broader application.

An object of the present invention is to provide a snap switch which will break circuit connections with a rapid snap action whereby to minimize arcing.

A further object is to provide a snap switch which will be cheap to manufacture and sturdy in construction.

A further object is to provide a switch which is well adapted to meet the needs of commercial operation.

Further objects will appear as the description proceeds.

Referring to the drawings—

Figure 1 is a view in side elevation of an electric light socket including a snap switch embodying the principles of the present invention;

Figure 2 is a sectional view taken along the plane indicated by the arows 2—2 of Figure 1;

Figure 3 is a sectional view taken along the plane indicated by the arows 3—3 of Figure 2;

Figure 4 is a sectional view taken along the plane indicated by the arrows 4—4 of Figure 2;

Figure 5 is a sectional view similar to Figure 1 but showing the switch in contact breaking position, and

Figure 6 is a view in perspective of one of the relatively stationary contacts forming part of the illustrated embodiment of the present invention.

The numeral 10 indicates a shell or housing for an insulating member 11 which supports certain switching mechanism, which will be described presently. Mounted on said insulating member 11 are the members 12—12 of electrical conducting material, which material in a preferred embodiment of the present invention is resilient, as, for example, phosphor bronze. Said members 12—12 are electrically connected to the plug receiving shell 13 and to the center contact 14, which are adapted to contact with the two terminals of an electric lamp or an electric plug.

Each of the contact members 12 comprises a flat portion 15 adapted to be riveted or otherwise secured to the insulating member 11. Integrally with and upstanding from said flat portion 15 is the portion 16 comprising a cantilever spring. The portions 16—16 of the two members 12—12 are arranged in substantially the same plane and are adapted to be sprung apart with a cantilever action. Each of said portions 16 is provided with a shoulder 17. Extending diametrically through the shell 10 and insulating member 11 is the plunger 18 provided at its two extremities with the finger grips 19—19, which may be made of insulating material. Projecting from the plunger 18 is the stud 20 adapted to ride in a slot 21 in the insulating member 11. The extremities of said slot 21 limit the movement of the plunger 18 diametrically of the shell 10 and insulating member 11.

The numerals 22—22 indicate bridging members having end portions 23—23 disposed within notches 24—24 in the plunger 18. Said members 22—22 are electrically connected together either by contact with one another or by contact with a metallic portion of the plunger 18. A spring 25 is connected to the members 22—22 adjacent to their outer extremities, whereby to draw said extremities together. When the parts are in contact making position, illustrated in Figure 2, the outer extremities of said members 22—22 will contact with the portions 16—16 of the members 12—12, whereby to form an electrical connection between said members 12—12. The members 22—22 will be held releasably in the position illustrated in Figure 2 by reason of the reaction of said members 22—22 against the portions 16—16 and against the notched portions of the plunger 18.

When it is desired to move the members 22—22 out of bridging relationship with the portions 16—16 of the members 12—12, the plunger will be moved to the left as the parts are viewed in Figures 2 and 3. This action will spread the outer extremities of the members 22—22 away from one another in opposition to the spring 25, bringing said outer extremities of the members 22—22 into engagement with the shoulders 17—17 of the cantilever portions 16—16 of the members 12. Continued movement toward the left of the plunger 18 will spread the cantilever portions 16—16 apart, putting said cantilever portions under tension. After

said plunger 18 has been moved to a critical region, the tension of the portions 16—16 against the extremities of the members 22—22 will cause said members to snap with a rapid movement away from the cantilever portions 16—16, whereby the parts will be snapped to the position shown in Figure 5, wherein the members 22—22 are biased by the spring 25 in contact breaking position, the plunger 18 being held in its left-hand position by reason of the action of said spring 25 which causes a reaction between the insulating member 11 and the plunger 18, holding said plunger in its left hand position.

When it is desired to again bring the members 22—22 into bridging relationship with the cantilever portions 16—16 of the members 12—12, the plunger 18 will be moved to the right as the parts are viewed in Figure 5. This action will result in the spreading of the extremities of the members 22—22 against the action of the spring 25. When the fulcrum axes of the members 22—22 pass the line of action of the spring 25, the parts will move with a snap action into the position shown in Figure 2, in which the cantilever portions 16—16 of the members 12 are bridged by the members 22—22.

Though a preferred embodiment of the present invention has been described in detail, many modifications will occur to those skilled in the art. It is intended to cover all such modifications that fall within the scope of the appended claims.

What is claimed is:—

1. In a snap switch, in combination, a pair of contact members having portions resiliently held in predetermined positions, bridging means adapted to contact with said portions and electrically connect same together, means for operating said bridging means, and a spring tending to draw the extremities of said bridging means toward one another, said portions being provided with shoulders adapted to be engaged by said bridging means, said shoulders being shaped to permit the movement of said bridging means past said shoulders with a snap action when said portions bearing said shoulders have been put under tension by said bridging means.

2. In a snap switch, in combination, a pair of contact members having portions arranged in substantially the same plane, said portions being cantilever springs and having shoulders, electrical bridging means for said portions, and means for moving said bridging means with a toggle action into engagement with said shoulders, said shoulders being shaped to permit the snapping past said shoulders of said bridging means when said contact members are put under tension by the toggle action of said bridging means.

3. In a snap switch, a pair of cantilever contact members, bridging means therefor comprising toggle members, means for moving said bridging means with a toggle action to selectably position said bridging means in or out of electrical engagement with said contact members, said cantilever contact members being provided with portions adapted to be engaged by said bridging members, whereby said bridging members may put said cantilever contact members under tension and whereby said bridging members will be snapped out of engagement with said contact members with a rapid motion.

4. In a snap switch, a pair of resiliently held contact members having bearing portions, bridging members adapted to electrically connect said bearing portions, said contact members having opposed portions adapted to be engaged by said bridging members, said opposed portions being disposed in angular relationship with said bearing portions.

5. In switch mechanism, in combination, contact members, bridging means adapted to contact with said contact members, a biasing spring adapted to hold said bridging means selectably on one side or the other of a fulcrum axis of said bridging means, means for positively moving said fulcrum axis relative to the line of action of said spring, said contact members being resiliently held and having portions adapted to be engaged by said bridging means to spread said contact members apart and to snap said bridging means out of contact with said contact members.

6. In switching mechanism, in combination, a pair of contact members, bridging means therefor, an operating member having operative engagement with said bridging means, and a spring for biasing said bridging means to either of two selectable positions, said contact members having abutment portions adapted to be engaged by said bridging means in its movement from one of said selectable positions to the other of said selectable positions to spread said contact members apart to cause said bridging means to break contact with said contact members with a snap action.

Signed at Chicago, Illinois, this 18th day of March, 1927.

DAVID D. GORDON.