Jan. 23, 1934. G. E. FORKNALL 1,944,551

CONTAINER

Filed March 21, 1933

Fig. 1.

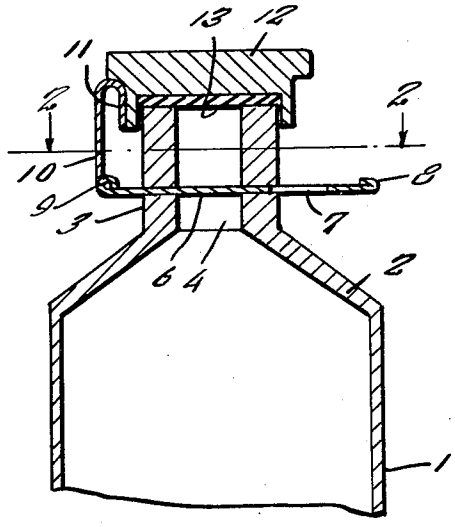

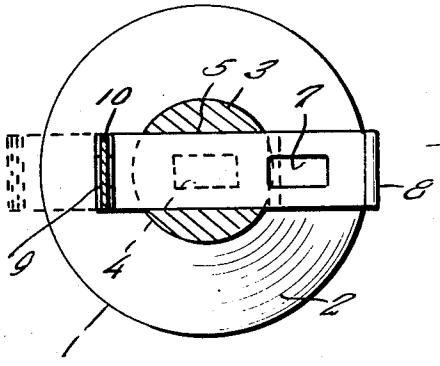

Fig. 2.

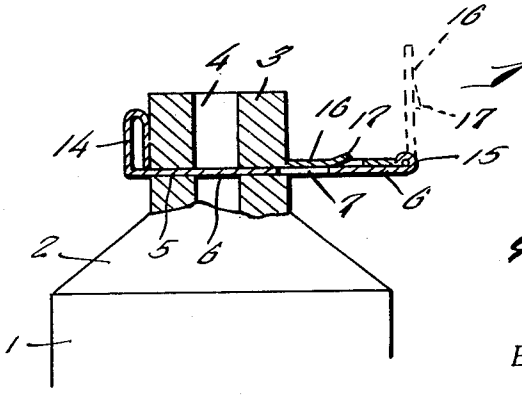

Fig. 3.

Inventor

George E. Forknall

By Clarence A. O'Brien

Attorney

Patented Jan. 23, 1934

1,944,551

UNITED STATES PATENT OFFICE

1,944,551

CONTAINER

George E. Forknall, Niagara Falls, N. Y.

Application March 21, 1933. Serial No. 661,991

3 Claims. (Cl. 221—60)

The present invention relates to new and useful improvements in containers in general and more particularly to containers of the collapsible tube type and has for its primary object to provide, in a manner as hereinafter set forth, a container comprising a closure which includes a novel construction, combination and arrangement of parts through the medium of which said closure may be conveniently opened to permit the discharge of the content of the container and closed and which, when closed, will be securely retained in this position in a manner to prevent leakage.

Other objects of the invention are to provide a container of the character described which will be simple in construction, strong, durable, highly efficient and reliable in use and which may be manufactured at low cost.

All of the foregoing and still further objects and advantages of the invention will become apparent from a study of the following specification, taken in connection with the accompanying drawing wherein like reference characters designate corresponding parts throughout the several views, and wherein:—

Figure 1 is a view in vertical section through the upper portion of a container constructed in accordance with the present invention.

Figure 2 is a view in horizontal section, taken substantially on the line 2—2 of Figure 1.

Figure 3 is a view, principally in vertical section, through a modified form of the invention.

Referring now to the drawing in detail, it will be seen that the reference numeral 1 designates the upper portion of a container of the collapsible tube type, said container including, as usual, a substantially conical shoulder portion 2 at its top, Rising from the shoulder portion 2 of the container is a substantially cylindrical neck 3 the bore 4 of which constitutes a discharge passage for the contents of the container, as will be apparent.

At an intermediate point, the neck 3 is provided with a transversely extending opening or slot 5 in which a flat metallic slide valve 6 is mounted for reciprocation. The slide valve 6 is provided, adjacent one end, with a port 7 for registry with the passage 4 of the neck 3. Said one end of the slide valve 6 is rolled or reversed, as at 8 to provide a thumb or finger receiving portion. As will be apparent, when the port 7 of the slide valve 6 is out of registry with the passage 4, said passage 4 will be closed by the slide valve 6.

Hingedly mounted, as at 9, on the other end of the slide valve 6 is an arm 10 which also is preferably of flat metal. The arm 10 terminates in a reversely turned free end portion 11 upon which a cap 12, having mounted therein a gasket 13, is fixed. As clearly seen in Figure 1 of the drawing, the cap 12 is adapted to seat on the free end of the neck 3.

In use, when the cap 12 is mounted on the neck 3, the slide valve 6 will be retained in closed position with the port 7 out of alignment with the passage 4, as clearly shown in the drawing. When it is desired to open the container, it is only necessary to swing the cap 12 off the neck 3 on the hinge 9 with a finger or the thumb of the hand in which the container is being held, after which the slide valve 6 may be conveniently actuated to bring the port 7 into alignment with the passage 4. In addition to providing a finger or thumb receiving portion, the bead or flange 8 provides a stop which is engageable with the neck 3 for limiting the movement of the slide valve 6 in one direction to prevent the port 7 from passing the passage 4 and to prevent detachment of said slide valve from the neck.

In the modified form of the invention shown in Figure 3 of the drawing, the slide valve 6 has formed integrally with one end thereof a resilient, upstanding, substantially U-shaped stop 14 for limiting the movement of said slide valve in one direction. The stop 14 is, of course, engageable with the neck 3 of the container. Hingedly mounted, as at 15, on the other end of the slide valve 6 is a latch 16 the free end of which is adapted for abutting engagement with the neck 3 for locking said slide valve against movement in the opposite direction and in closed position. The latch 16 has struck therefrom a prong 17 beneath which a finger or thumb nail, or a suitable implement, may be inserted for the purpose of swinging said latch to inoperative position to permit the slide valve 6 to be moved to open position. It will thus be seen that, in this form of the invention, when the slide valve 6 is in closed position, it is retained against movement in opposite directions in the neck 3 by the resilient stop 14 and the hinged latch 16.

It is believed that the many advantages of a container in accordance with the present invention will be readily understood, and although the preferred embodiments of the invention are as illustrated and described, it is to be understood that further modifications and changes in the details of construction may be resorted to which will fall within the scope of the invention as claimed.

What is claimed is:—

1. A container comprising a neck having a discharge passage therein a slide valve operatively mounted in the neck for controlling the discharge passage, an upstanding, substantially U-shaped resilient stop integral with one end of the slide valve and engageable with one side of the neck for yieldingly limiting the movement of said slide valve in one direction, and a latch hingedly mounted on the other end of the slide valve and engageable, at its free end on the opposite side of the neck for releasably locking said slide valve in its closed position.

2. A container comprising a neck having a discharge passage therein, a slide valve operatively mounted in the neck for controlling the discharge passage, a stop on one end portion of the slide valve engageable with the neck for limiting the movement of said slide valve in one direction, a substantially flat, metallic latch hingedly mounted on the other end portion of the slide valve and engageable, at its free end, with the neck for releasably locking the slide valve in its closed position, and a prong struck outwardly from the latch for disengaging said latch from the neck.

3. A container comprising a neck having a longitudinal discharge passage therein, and further having an opening extending transversely therethrough and communicating with the discharge passage, a slide valve mounted for reciprocation in the opening for controlling the discharge passage, said slide valve having a port therein for registry with the discharge passage, the slide valve including an upwardly, rearwardly and then downwardly directed end portion constituting a resilient stop engageable with the neck for yieldingly limiting the movement of said slide valve in one direction, a substantially flat, metallic latch hingedly mounted on the other end of the slide valve and engageable, at its free end, with the neck for releasably locking said slide valve in its closed position, and a prong struck outwardly from the latch for disengaging said latch from the neck.

GEORGE E. FORKNALL.