2 Sheets—Sheet 1.

I. G. CHANDLEE.

Shuttle-Motion for Looms.

No. 225,566. Patented Mar. 16, 1880.

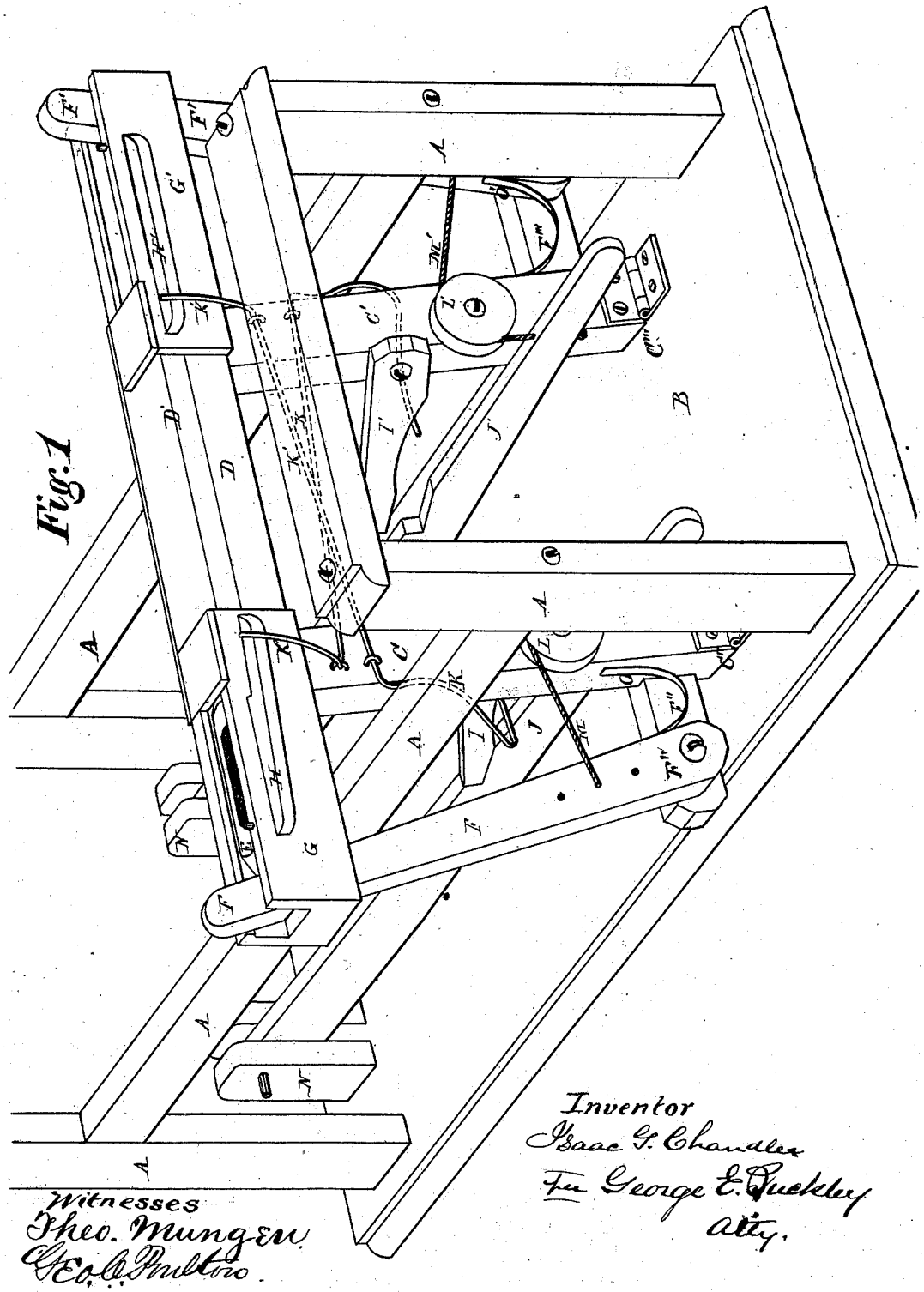

Fig. 1

Witnesses
Theo. Mungen
Geo. C. Fulton

Inventor
Isaac G. Chandlee
per George E. Buckley
atty.

N. PETERS, PHOTO-LITHOGRAPHER, WASHINGTON, D. C.

2 Sheets—Sheet 2.

I. G. CHANDLEE.

Shuttle-Motion for Looms.

No. 225,566. Patented Mar. 16, 1880.

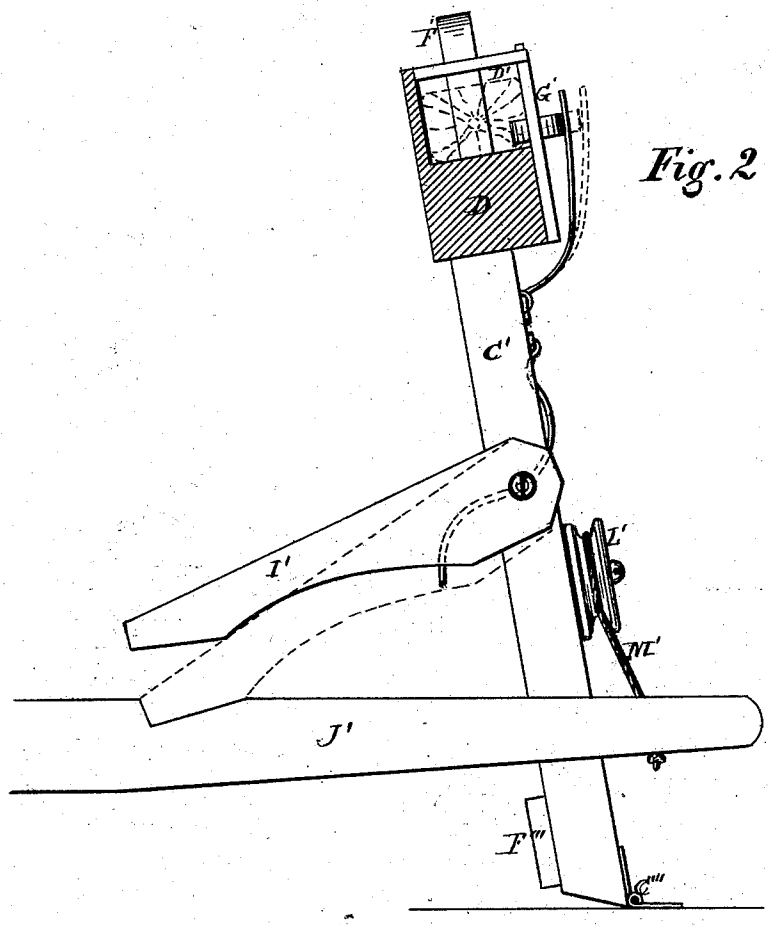

Fig. 2

Fig. 3

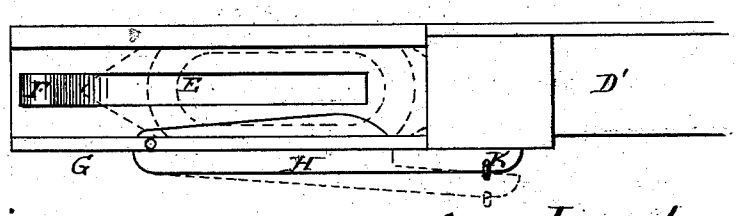

Witnesses:
Henry F. Buckley
A. S. Seldomridge

Inventor.
Isaac G. Chandlee
per George L. Buckley
atty.

N. PETERS, PHOTO-LITHOGRAPHER, WASHINGTON, D. C.

UNITED STATES PATENT OFFICE.

ISAAC G. CHANDLEE, OF PHILADELPHIA, PENNSYLVANIA.

SHUTTLE-MOTION FOR LOOMS.

SPECIFICATION forming part of Letters Patent No. 225,566, dated March 16, 1880.

Application filed November 11, 1878.

To all whom it may concern:

Be it known that I, ISAAC G. CHANDLEE, of the city and county of Philadelphia, State of Pennsylvania, have invented certain new and useful Improvements in Shuttle-Motions for Looms; and I do hereby declare the following to be a full, clear, and exact description of the same, reference being had to the annexed drawings, making part hereof.

The nature of my invention is fully set forth in the following specification and claims.

To enable others skilled in the art to make and use my invention, I will describe its construction and operation.

In the drawings, Figure 1 is an isometric view of so much of a loom as is necessary to illustrate my invention; Fig. 2, a cross-section of the lathe, showing the shuttle-race, sword, pawl, and picking-treadle; Fig. 3, a top view of the shuttle-box, part of the shuttle-race, and the binder or swell, the shuttle being shown in dotted lines, with the position of the binder in dotted lines when the shuttle is in the box to which the binder is attached.

A A A is the frame of the loom; B, the foundation or floor; C C′, the swords, hinged at C″ C‴, respectively, which sustain and vibrate the lathe D. D′ is the shuttle-race; E, the shuttle; F F′, the picking-sticks, hinged below, respectively, to carriers or beams F″ and F‴, projecting laterally from the lower part of the swords C C′. G G′ are the fronts of the shuttle-boxes. H H′ are binders or swells. Hinged on the swords or supports of the lathe-frame, C C′, are the pawls I I′, projecting rearward toward the back of the loom, so that their points are capable of resting in notches in the top of the treadles J J′, respectively. N N are treadle-blocks, in which are hinged the rear ends of the treadles J J′. K K′ are levers, to operate the pawls I I′, and they also act as springs to hold in the shuttle after it enters the box and prevent its recoil. L L′ are loose pulleys to sustain cords M and M′, which latter are attached by one end to treadles J J′, and at the other to picking-sticks F F′, respectively, to throw in these sticks. O O′ are curved springs set between stick F and sword C and between stick F′ and sword C′, respectively, to force back the hinged sticks after the latter have been drawn in by cords M and M′.

When the shuttle is in the position shown in Fig. 1 in the box G the lathe D is thrown backward. Now, at the time this operation is about to be effected it will be seen that the shuttle in box G has, since it rests against the inner swell or curved side of the hinged binder H, forced this binder out to the position shown in dotted lines in Fig. 3, thus forcing out the lever K and raising the inner and lower end of this lever, so as to raise pawl I′ clear of the notch in treadle J′, while the absence of the shuttle from box G′ allows the binder H′ to rest well into its slot in box G′, the upper end of lever K′ resting against it, and, in fact, holding it in while the lower end of this lever has dropped, so as to allow pawl I to drop also, and the lower end of the pawl I is in position to catch into the notch in the upper edge of picking-treadle J. The act of throwing backward the lathe D results in the pawl I dropping into the notch of picking-treadle J and forces treadle J down. This draws taut the cord or strap M, and throws the upper part of picking-stick F violently inward. This results in the shuttle E receiving a violent impulse along the shuttle-race, and it is thrown into box G′, forcing partially out the swell or binder H′, which, being pressed upon by the lever K′, is kept against the shuttle and prevents the latter from rebounding. The conditions of the previously-described parts are now reversed and the shuttle is ready, by a stroke from picking-stick F′, to be propelled back to box G. These motions are made regular and continuous by repeated vibrations of the lathe D, which at every backward stroke causes the shuttle to be thrown from side to side and through the warp-threads, which, in practice, are passed over the lathe D.

It will be seen that at the moment when the backward stroke of the lathe D has ceased the pawl on the opposite side from that on which the shuttle has stopped rests in the notch of its picking-treadle; but when the lathe is drawn forward this pawl is lifted out of the notch by the spring of the lever K or K′, (as the case may be,) as the lower end of this lever has been raised by the entry of the shuttle into the box at the upper and outward end of the lever.

Spiral springs may be substituted for the curved band-springs O O′; or, instead of springs,

cords and weights may be rigged behind the picking-sticks to draw them back after their strokes.

The treadles J J′ are known as picking-treadles as distinguished from the ordinary treadles which operate the heddles. The notches which I use in them may be substituted by projections or catches, upon which the points of the pawls I I′ may strike.

Having thus described my invention, what I claim as new, and desire to secure by Letters Patent, is—

1. The combination of binders or swells H H′, levers K K′, pawls I I′, and notched treadles J J′, shuttle E, picking-sticks F F′, cords or straps M M′, and lathe D, substantially as described.

2. In a loom, the combination of the notched treadles J J′, lathe D, pawls I I′, and means to actuate said pawls, whereby they are made to engage alternately with the treadles to depress the same, and means whereby said treadles are raised, substantially as and for the purpose set forth.

ISAAC G. CHANDLEE.

Witnesses:

GEORGE E. BUCKLEY,

HENRY V. BUCKLEY.