Oct. 2, 1928. 1,686,251

R. V. PHILLIPS

INSULATED CONTACT MEMBER

Filed March 15, 1927

Fig. 1.

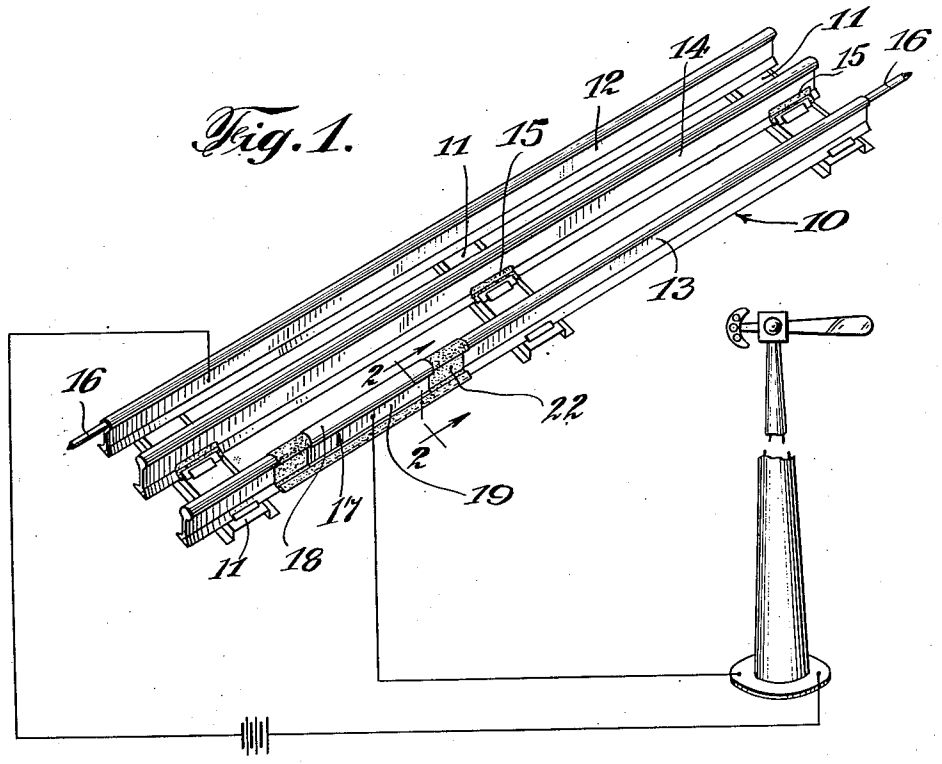

Fig. 2.

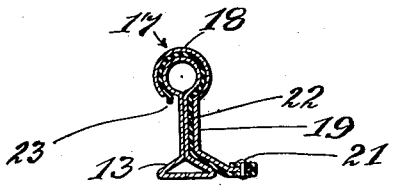

Fig. 3.

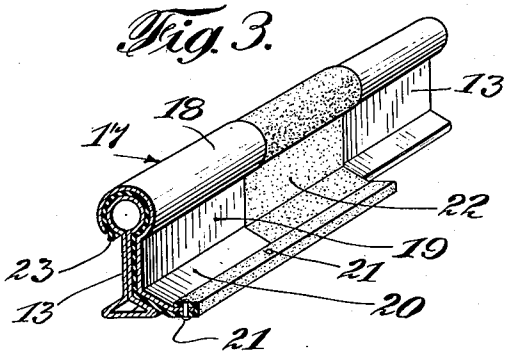

INVENTOR

Ray V. Phillips

BY

C. P. Goepel his ATTORNEY

Patented Oct. 2, 1928. 1,686,251

UNITED STATES PATENT OFFICE.

RAY V. PHILLIPS, OF BROOKLYN, NEW YORK.

INSULATED-CONTACT MEMBER.

Application filed March 15, 1927. Serial No. 175,837.

This invention relates to insulated contact members and more particularly to an attachment for toy railways for controlling signals, crossing gates, and the like.

The object of the present invention is to control the movements of such signals upon the approach of a train by establishing contact through the medium of the wheels and axles.

A feature of the present invention is its ability to be readily attached to or detached from the ordinary track section at any point throughout its length so that its action is totally independent of any particular group of track sections.

Another feature of the invention is its adaptability to application on rails of a mechanical train, so that electrically controlled automatic signals may be used in connection with such mechanical trains.

Heretofore, in the production of such devices, it has been customary to build the insulated contact member as a unitary part of one of the rails, so that when applied, care had to be exercised in the connecting of the rails at their ends to the next adjacent rails with suitable insulated pins, and danger of the adjacent ends contacting through inaccurate fits on the pins was always present. In addition to this disadvantage, the insulated contact member once placed in position could not be readily transferred to another location without disconnecting certain other track sections and the attendant inconvenience accompanying such maneuver.

It is, therefore, another feature of the present invention to enable the insulated contact member to be readily transferred from one position to another without necessitating the disconnecting of the track sections and to cheapen the construction so as to increase its marketability.

Still another feature of the invention is its construction, which while preserving its functions as above set forth, also avoids danger of throwing a fast moving object from the track.

With the above and other objects in view, the invention consists in the novel construction, combination, and arrangement of parts, which will be fully set forth in the following specification, claimed and illustrated in the acompanying drawing in which:—

Figure 1 is a perspective view of a track section showing this improved contact member applied thereto,

Figure 2 is an enlarged transverse sectional view taken on line 2—2 of Figure 1, and

Figure 3 is a fragmentary perspective view of Figure 2.

Referring to the drawings in detail, the track section designated generally by the numeral 10, comprises cross ties 11 which support the usual rails 12 and 13 adjacent opposite ends, and when used in connection with an electrical train, these ties also support the contact rail 14 which is insulated from the ties by the use of sheet fibre 15 in the customary manner. The ends of the rails 12 and 13 are usually provided with pins 16 which enter the ends of the adjacent rail sections. Similar pins connect adjacent ends of the rail sections 14, so as to provide a continuous contact rail extending throughout the entire length of the track. The above structure is common to both mechanical and electrical trains with the exception of the rail 14 and insulation 15, which in the case of mechanical trains is not used.

The insulated contact member 17 about to be described consists essentially of a cap member 18 which is substantially tubular in cross section to yieldingly embrace the ball or head of the rail to which it is applied. Formed along one side edge of the cap 17 is a web 19, which as shown, lies in a plane parallel with the web of the rail and terminates at its lower edge in an outwardly extending flange 20 which substantially corresponds to the flange of the rail. As shown, the flange 20 projects beyond the edge of the flange of the rail and is pierced to receive rivets 21 by means of which the sheet fibre lining 22 is held in position on the contact member 17. As shown this fibre lining conforms to the shape of the contact member and one edge projects slightly beyond the edge of the cap member 18 as at 23 to prevent possible contact between the cap member and the rail. The opposite edge of the lining 22 is carried over and around the edge of the flange 20 and is secured thereto by means of the rivets 21 above refered to.

It will be noted that the open space between the free edge of the tubular cap 18 and the insulation 22 on the web 19, is quite narrow so that in order to apply said cap to the head of the rail, it is necessary to first expand or distend the same to increase the width of said opening. Upon then contracting, the wall of the cap 18 yieldingly presses the insulation material extending over the inner surface

thereof upon the rail head. A tight clamping action is thus obtained and due to the frictional resistance of the insulation material accidental shifting movement of the contact member longitudinally along the rail from its applied position is effectually prevented.

In order to prevent a too sudden elevation of the wheel of the train when the same engages the contact member, the ends of the lining 22 extend somewhat beyond the ends of the contact member and as a consequence a more gradual rise is encountered which is not likely to throw the object from the track.

In use the device is applied to the rail in the manner illustrated and one terminal of an electrical circuit is soldered or connected to the contact member 17, while the other terminal is connected to one of the rails 12 or 13. Obviously, as the train passes over the contact member, the circuit will be completed through the wheels and axles, so that the signal or other device connected in circuit will be operated. It is obvious that the contact member may be varied in length to meet varying requirements, and naturally a long number, depending also on the length of the train, will maintain the signal in operation for a greater period. Furthermore, a multiplicity of such units may be attached to a track, and various different signals or other devices operated.

While in the foregoing there has been shown and described the preferred embodiment of this invention, it is to be understood that minor changes in the details and construction, combination and arrangement of parts, may be resorted to without departing from the spirit and scope of the invention as claimed.

What is claimed is:—

1. An insulated contact member comprising a cap to embrace the head of a rail, a web lying parallel with the web of the rail, a flange lying parallel with the rail flange, and a sheet fibre lining interposed between the rail and said contact member.

2. An insulated contact member comprising a cap to embrace the head of a rail, a web lying parallel with the web of the rail, a flange lying parallel with the rail flange and a sheet fibre lining interposed between the rail and said contact member, and extensions on opposite ends of the lining projecting beyond the ends of the contact member.

3. As a new article of manufacture, a contact member having a part lined with insulating material and adapted to yieldingly grip a portion of a track rail to retain said member in its applied position, and said insulating material having an extension to project longitudinally from said contact member upon the rail.

4. As a new article of manufacture, a contact member lined with insulating material on one side and including an expansible and contractable cap portion adapted to yieldingly grip the head of a track rail to retain said member in applied position, and said insulating material having extensions thereon to project in opposite directions from the contact member upon the rail.

5. An insulated contact member comprising a web adapted to be positioned in parallel relation with the web of a rail and having a base flange to overlie the rail flange and also provided with a part for resilient clamping engagement over the head of the rail, and insulating means secured to the contact member and preventing metallic contact between the several parts thereof and the opposed parts of the rail.

In testimony that I claim the foregoing as my invention, I have signed my name hereto.

RAY V. PHILLIPS.