May 7, 1963 J. G. HARPER 3,088,853

METHOD OF PURIFYING GALLIUM BY RECRYSTALLIZATION

Filed Nov. 17, 1959

Fig. 1.

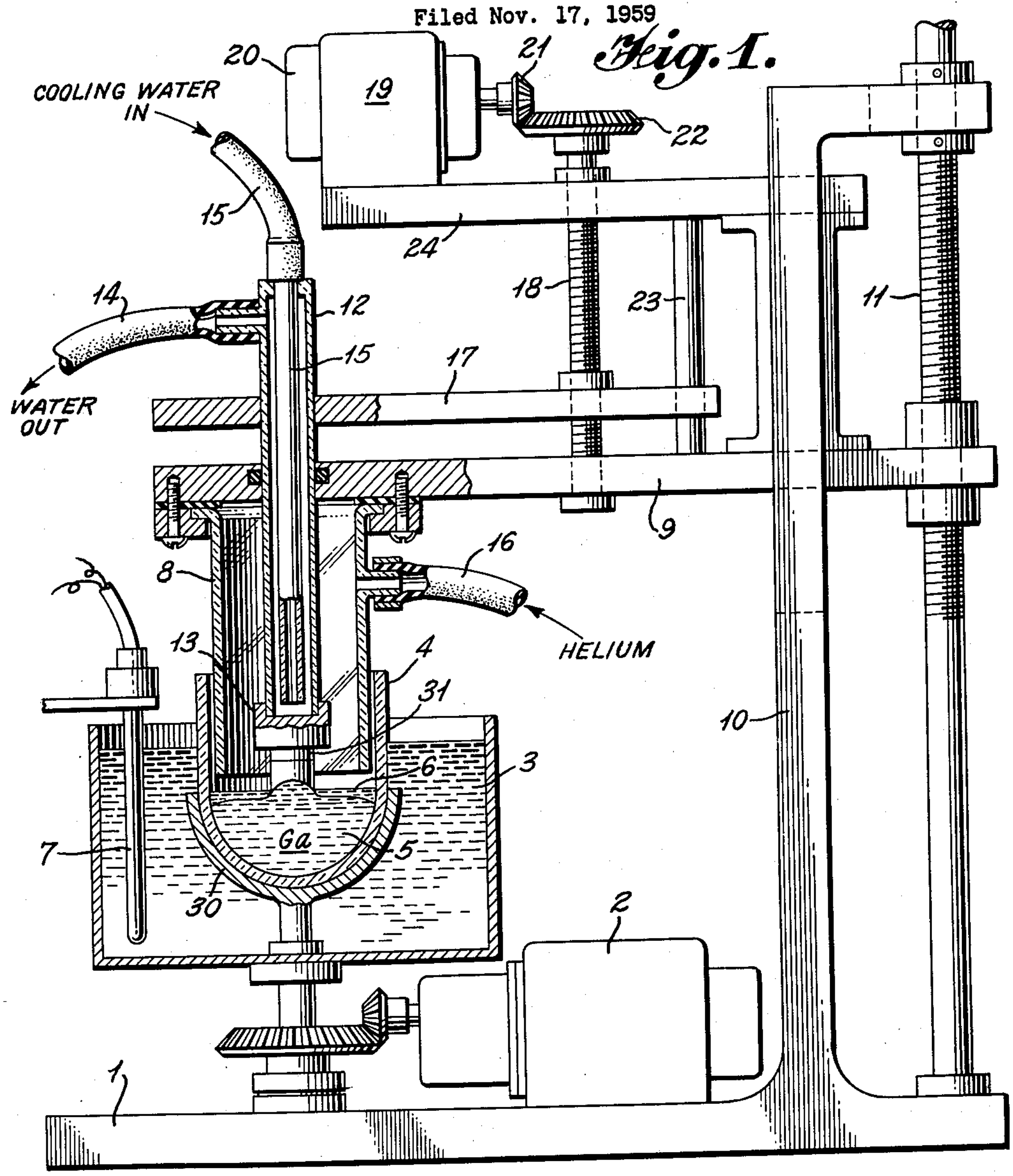

Fig. 2.

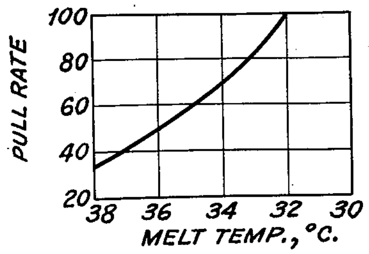

100 ≅ 1 INCH PER HR.
SPIN RATE=12 RPM

INVENTOR
James G. Harper

BY Stevens, Davis, Miller & Mosher
ATTORNEYS

United States Patent Office

3,088,853
Patented May 7, 1963

3,088,853

METHOD OF PURIFYING GALLIUM BY RECRYSTALLIZATION

James G. Harper, Dallas, Tex., assignor to Texas Instruments Incorporated, Dallas, Tex., a corporation of Delaware

Filed Nov. 17, 1959, Ser. No. 853,562
3 Claims. (Cl. 148—1.6)

This invention relates to a method and apparatus for producing gallium of extreme purity, and more particularly to a method and apparatus for producing gallium of extremely high purity by single crystal growth recrystallization.

The literature of the prior art shows that purification of gallium may be accomplished by using any of several methods, such as acid leaching, zone refining, and single crystal growth by fractional crystallization. The single crystal growth by fractional crystallization is accomplished either by the Kryropoulos technique or by removing from a melt of molten gallium the single crystals which are formed spontaneously as the melt cools. However, the above-mentioned methods are subject to limitations. The acid-leaching technique is effective to remove surface impurities, but is relatively ineffective in removing impurities from within a gallium sample. Purification using single crystal growth produced by fractonal crystallization is effective in removing impurities, but very inefficient in material and time. Although zone refining is very effective in removing impurity elements from the gallium, and it is possible to process substantial quantities of the material, it has been found that more complete purification may be obtained using a modified Czochralski technique for growing large single crystals.

Using a modified Czochralski technique, the present invention discloses a method and apparatus for providing an economically feasible and efficient method of purifying substantial quantities of gallium. The apparatus used is similar to conventional crystal pullers used in the semiconductor art, but incorporates an additional means for maintaining the seed crystal holder at a constant low temperature. As gallium readily oxidizes, and this oxide film will prevent the growth of single crystal material, the method of the invention provides means for maintaining the gallium surface free of oxide films.

In growing single crystals from a melt using the Czochralski technique, it is necessary that the proper thermal gradient be maintained across the liquid-solid interface. This presents no particular problem when this method is used for growing single crystals of material such as germanium or silicon which melt at relatively high temperatures. However, because of the low melting temperature of gallium (approximately 29.7° C.), it is difficult to maintain the proper temperature gradient across the liquid solid interface as crystals of large size are grown. According to the present invention, both the pull rate and the temperature of the melt are varied over a relatively wide range to provide the necessary temperature gradients.

It is therefore one object of the present invention to provide a method of producing highly purified gallium by a process of single crystal recrystallization.

Another object of this invention is to provide an apparatus for growing a single crystal of gallium which is substantially free of impurities.

Yet another object of this invention is to provide a method and apparatus for producing a gallium crystal of sufficiently high purity for use in the manufacture of semiconductor materials adapted for such electronic devices as transistors and diodes.

Other objects and features of the present invention will

more fully appear from a detailed description of the drawing in which:

FIGURE 1 of the drawing is an elevational view, partly in section, of the apparatus of this invention; and

FIGURE 2 is a graph showing the relationship of pull rate to melt temperature in the process of this invention.

As illustrated in FIGURE 1, support frame **1** including vertical leg **10** is arranged to support the equipment of the invention. An electrically controlled motor **2** (control mechanism not shown) is located on frame **1** and drives a container **3** which holds a quantity of ethylene glycol, water, or other liquid suitable as a temperature bath. A silica or Pyrex crucible **4** is supported within the temperature bath of ethylene glycol by a crucible holder **30**. The rotation imparted to the container **3** and crucible **4** performs a dual function in that it provides even heating of the temperature bath and eliminates the requirement for a rotating pull rod. A melt of gallium **5** occupies the crucible.

Normally, a large single crystal of gallium cannot be grown from a melt having an oxide film, as the oxide film will seed new crystals oriented in different planes. Any existing oxide film is removed and further formation of oxide is prevented by covering the top of the gallium melt **5** with a layer of dilute hydrochloric acid **6** of the order of 1–10 percent strength. In place of hydrochloric acid, acetic acid may be used. The depth of the hydrochloric acid layer must be sufficient to cover the entire gallium surface. In this regard, it will be appreciated that gallium exhibits a convex meniscus.

A heater **7**, equipped with a thermostat, is immersed in the bath of ethylene glycol to maintain the temperature of the liquid bath at an optimum value. Placed within the crucible **4** is a cylindrical glass shield **8**. This glass shield is connected at its upper end to horizontal support **9**. Horizontal support **9** is slidably mounted on leg **10** and meshes with lead screw **11**. The support **9** may be raised and lowered along the upright member **10** of support frame **1** by lead screw **11**. The driving means for screw **11** is not shown, but could be either a motor or a hand crank. A hollow quartz or glass rod **12** extends through support **9** into the shield **8**. A seed chuck **13** is positioned at the bottom of rod **12**.

A seed crystal **31** oriented in the (001) growth plane is mounted in the chuck **13**. Because of the crystal structure of gallium, it is easier to grow a large single crystal of gallium using this growth plane. To provide for cooling of the rod **12**, cold water is circulated therethrough by conduits **14** and **15**. Conduit **16** maintains an atmosphere of helium or other inert gas within the glass shield and above the melt, thereby preventing oxidation of the grown crystal. To lower and raise the rod **12**, plate **17**, connected to the rod **12**, engages lead screw **18**. Motor **19** and control **20** connect to the lead screw **18** via gears **21** and **22**. A pair of guide rods **23**, one directly behind the other, passing through plate **17** are connected to support **9** and support **24**, as shown. Support **24** is slidably mounted on leg **10** and physically connected to support **9** so that the distance between supports **9** and **24** is maintained constant.

A specific example of the manner in which the process of the invention can be carried out is as follows. The crucible containing the impure gallium with a covering layer of dilute hydrochloric acid was placed in the ethylene glycol bath. The crucible and temperature bath were caused to rotate at a spin rate of 12 r.p.m. Helium was passed into the glass shield to provide an inert ambient. The thermostat and heater were regulated to heat the bath to about 38 degrees C. at which temperature the gallium was molten. The gallium seed was lowered below the surface of the dilute hydrochloric acid into contact with the rotating gallium melt and then slowly raised to pull a crystal from the melt. The temperature of seed chuck 13 was maintained at about 7 degrees C. by circulation of cold water.

As the crystal was grown, it became necessary to vary the temperature of the melt and the pull rate over a wide range to maintain the desired crystal size and shape. The best results were obtained by relating the pull rate of the seed chuck to the temperature of the melt. As pointed out above, the initial melt temperature is about 38 degrees C. As the crystal grows in size, the temperature was lowered to about 32 degrees C. and the pull rate increased. Referring now to FIGURE 2 of the drawing, it is seen that the pull rate of about 35 (where 100 equals about 1 inch per hour) at 38 degrees C. is increased to 100 at 32 degrees C. A spin rate of 12 r.p.m. was maintained throughout. This process allows the crystal to be grown roughly in the shape of a cylinder. During growth, the pull rate was changed and the temperature lowered manually responsive to visual observation on the part of the operator.

Though the above temperature-speed ratios have been found most satisfactory in practice, it is apparent that the exact speeds and temperatures listed are not critical. The melting point of gallium is 29.75 degrees centigrade. As a practical matter, the lowest temperature of the melt must be about 30 degrees C. The melt may be initially maintained at higher temperatures, for example, up to 40 degrees C. The upper limit is set by the temperature at which a crystal will grow on the cooled seed. The rate of pull also can be varied from the rates shown. The particular rates used by the operator will be chosen, of course, after noting what rates give a cylindrical crystal of the desired size.

As a typical example, a crystal can be grown about 1 inch in diameter and about 3 to 4 inches long over a period of about 3 to 4 hours. The variation in pull rate and temperature can be accomplished on an intermittent step basis, linearly or utilizing differential or integral proportioning at the discretion of the operator.

In an actual embodiment of the present process using the above temperatures and pull rates, a 440 gram sample of gallium was recrystallized four times. The following table shows the composition of the crystal and residue after each pulling operation. It will be seen that all impurities (listed in parts per million) were removed to a degree so as to be undetectable by spectrographic analysis.

Table 1

	Impurity			
	Cu	Ag	Fe	Mg
Starting Material (440 g.)	10–100	0.1–1	<0.1	0.01–0.1
1st Crystal (420 g.)	1–10	--------	<0.1	<0.1
1st Residue (20 g.)	100–1,000	1–10	<0.1	0.1–1
2nd Crystal (300 g.)	1–10	<0.1	--------	<0.1
2nd Residue (120 g.)	10–100	<0.1	--------	<0.1
3rd Crystal (280 g.)	<0.1	--------	--------	--------
3rd Residue (20 g.)	1–10	--------	--------	<0.1
4th Crystal (250 g.)	--------	--------	--------	--------
4th Residue (30 g.)	1–10	--------	--------	--------

There has been described a specific method and apparatus for purifying gallium by single crystal growth recrystallization. However, it is apparent that modifications and changes may be made in this method and apparatus without departing from the scope of the invention disclosed herein. Accordingly, it is the intent of the inventors to claim all such modifications and changes as are within the scope of the appended claims.

What is claimed is:

1. A process of purifying gallium by a single crystal growth method which comprises melting an impure quantity of gallium at about 38° C. in an inert ambient, bringing a seed crystal of gallium cooled to about 7° C. in contact with said melt while maintaining a layer of dilute hydrochloric acid in contact with said melt, withdrawing said seed at a rate of about 0.35 inch per hour to grow a crystal thereon and gradually increasing the speed of withdrawal to 1 inch per hour as the temperature of the melt is lowered to 32° C., and repeating the above procedure using the drawn crystal as the starting material in each successive recrystallization until the desired degree of purity is obtained.

2. A process of purifying gallium by a single crystal growth method which comprises melting an impure quantity of gallium at about 38° C. in an inert ambient, bringing a cooled seed crystal of gallium in contact with said melt while maintaining a layer of dilute hydrochloric acid in contact with said melt, withdrawing said seed at a slow rate such as will grow a crystal thereon and gradually increasing the speed of withdrawal as the temperature of the melt is lowered to about 32° C., whereby the desired uniform physical size of the gallium crystal is maintained throughout the pulling process, and repeating the above procedure using the drawn crystal as the starting material until the desired degree of purity is obtained.

3. A process of purifying gallium by a single crystal growth method which comprises melting an impure quantity of gallium, maintaining the temperature of the resulting melt at a few degrees above its melting point, bringing a cooled seed crystal of gallium in contact with said melt while maintaining a layer of dilute acid in contact with said melt, withdrawing said seed at a slow rate such as will grow a crystal thereon and gradually increasing the speed of withdrawal as the temperature of the melt is lowered to a temperature just above the melting point of gallium, whereby the desired uniform physical size of the gallium crystal is maintained throughout the pulling process, and repeating the above procedure using the drawn crystal as the starting material, until the desired degree of purity is obtained.

References Cited in the file of this patent

UNITED STATES PATENTS

1,576,083	Boyer	Mar. 9, 1926
2,852,420	Pohl	Sept. 16, 1958
2,889,240	Rosi	Jan. 2, 1959
2,893,847	Schweickert et al.	July 7, 1959
2,898,249	Jensen	Aug. 4, 1959
2,904,512	Horn	Sept. 15, 1959
2,927,008	Shockley	Mar. 1, 1960