(12) INTERNATIONAL APPLICATION PUBLISHED UNDER THE PATENT COOPERATION TREATY (PCT)

(19) World Intellectual Property Organization
International Bureau

(43) International Publication Date
15 May 2014 (15.05.2014)

WIPO | PCT

(10) International Publication Number
WO 2014/074356 A1

(51) International Patent Classification:
H04B 1/40 (2006.01) *H04L 25/05* (2006.01)
H04J 3/06 (2006.01) *H04L 7/00* (2006.01)

(21) International Application Number:
PCT/US2013/067394

(22) International Filing Date:
30 October 2013 (30.10.2013)

(25) Filing Language: English

(26) Publication Language: English

(30) Priority Data:
13/669,730 6 November 2012 (06.11.2012) US

(71) Applicant: **MOTOROLA MOBILITY LLC** [US/US]; 600 North US Highway 45, Libertyville, Illinois 60048 (US).

(72) Inventors: **AGAMI, Gregory M.,**; 519 S. Lincoln Lane, Arlington Heights, Illinois 60005 (US). **CARNEY, Michael J.,**; 705 W. Park Avenue #20, Libertyville, Illinois 60048 (US). **KIM, Yun H.,**; 2002 Fountain Grass Court, Bartlett, Illinois 60103 (US). **QUANBECK, Chris T.,**; 523 N. Milwaukee Avenue Apt. D, Libertyville, Illinois 60048 (US). **TANCEREL, Ludovic,**; 77 rue Jonas, F-31200 Toulouse (FR).

(74) Agents: **ANOLICK, Simon B.** et al.; 600 North US Highway 45, Libertyville, Illinois 60048 (US).

(81) Designated States *(unless otherwise indicated, for every kind of national protection available)*: AE, AG, AL, AM, AO, AT, AU, AZ, BA, BB, BG, BH, BN, BR, BW, BY, BZ, CA, CH, CL, CN, CO, CR, CU, CZ, DE, DK, DM, DO, DZ, EC, EE, EG, ES, FI, GB, GD, GE, GH, GM, GT, HN, HR, HU, ID, IL, IN, IR, IS, JP, KE, KG, KN, KP, KR, KZ, LA, LC, LK, LR, LS, LT, LU, LY, MA, MD, ME, MG, MK, MN, MW, MX, MY, MZ, NA, NG, NI, NO, NZ, OM, PA, PE, PG, PH, PL, PT, QA, RO, RS, RU, RW, SA, SC, SD, SE, SG, SK, SL, SM, ST, SV, SY, TH, TJ, TM, TN, TR, TT, TZ, UA, UG, US, UZ, VC, VN, ZA, ZM, ZW.

(84) Designated States *(unless otherwise indicated, for every kind of regional protection available)*: ARIPO (BW, GH, GM, KE, LR, LS, MW, MZ, NA, RW, SD, SL, SZ, TZ, UG, ZM, ZW), Eurasian (AM, AZ, BY, KG, KZ, RU, TJ, TM), European (AL, AT, BE, BG, CH, CY, CZ, DE, DK, EE, ES, FI, FR, GB, GR, HR, HU, IE, IS, IT, LT, LU, LV, MC, MK, MT, NL, NO, PL, PT, RO, RS, SE, SI, SK, SM, TR), OAPI (BF, BJ, CF, CG, CI, CM, GA, GN, GQ, GW, KM, ML, MR, NE, SN, TD, TG).

Published:

— *with international search report (Art. 21(3))*

(54) **Title**: SYNCHRONIZING RECEIVE DATA OVER A DIGITAL RADIO FREQUENCY (RF) INTERFACE

FIG. 2

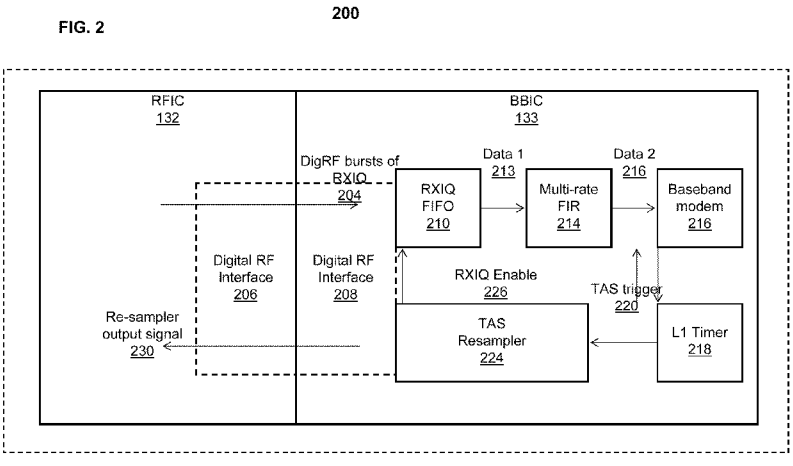

(57) **Abstract**: A method and system synchronizes transmission of receive data over an asynchronous digital radio frequency interface in a wireless communication device. A timing accurate strobe (TAS) re-sampler generates, using a first timing strobe synchronized to a baseband modem clock, a second timing strobe synchronized to a radio frequency integrated circuit (RFIC) clock. The TAS re-sampler forwards the second timing strobe to the RFIC to trigger a collection of data samples and initiates a count of RFIC clock cycles. The RFIC sends the data samples to a baseband First In First Out (FIFO) buffer over the asynchronous interface. In response to the count reaching a pre-determined number of RFIC clock cycles corresponding to a fixed delay, the TAS re-sampler triggers a reading of data from the FIFO buffer. The baseband modem receives data corresponding to the collection of data samples after a fixed delay from generation of the first timing strobe.

WO 2014/074356 A1

SYNCHRONIZING RECEIVE DATA OVER A DIGITAL RADIO FREQUENCY (RF) INTERFACE

BACKGROUND

1. Technical Field

[0001] The present disclosure relates in general to wireless communication devices and in particular to receiver synchronization in wireless communication devices.

2. Description of the Related Art

[0002] Many wireless communication devices are capable of operating in different modes using different network communication standards such as Global System for Mobile Communications (GSM), Code Division Multiple Access (CDMA), and Long Term Evolution (LTE). To maximize use of the limited real estate within these devices, the devices are configured to switch operation between communication modes using a same set of transceiver components. However, these devices have a challenge of maintaining receiver synchronization between the baseband modem and a radio frequency integrated circuit (RFIC). This challenge of maintaining synchronization can often be associated with initiating communication operation following a sleep mode or after a power up procedure. Furthermore, in order to use common RF components to reduce power and area requirements, the RFIC sampling rate may differ from a baseband modem sampling rate. A phase locked status associated with modem timing recovery can be lost if a receiver's timing shifts by more than a specific fraction of the cycle period associated with the corresponding receiver sampling rate. For example, phase locked status can be lost if the receiver's timing shifts by more than the one quarter of the baseband cycle period for a number of CDMA based technologies. In addition, wireless communication devices generally use an asynchronous digital radio frequency interface as a standard communication interface between the baseband modem and the RFIC. However, the time interval between an RFIC sampling of an over-the-air signal and an arrival of corresponding

data into the baseband First In First Out (FIFO) buffer after transmission over the asynchronous digital radio frequency communication interface is not fixed.

BRIEF DESCRIPTION OF THE DRAWINGS

[0003] The described embodiments are to be read in conjunction with the accompanying drawings, wherein:

[0004] **FIG. 1** is a block diagram illustrating an example wireless communication device within which the various features of the described embodiments can be advantageously implemented, according to one embodiment;

[0005] **FIG. 2** provides a block diagram representation of a receiver having a baseband integrated circuit (BBIC) and a radio frequency integrated circuit (RFIC), according to one embodiment;

[0006] **FIG. 3A** is a block diagram illustrating a timing accurate strobe (TAS) re-sampler circuit, according to one embodiment;

[0007] **FIG. 3B** is a block diagram illustrating another embodiment of a timing accurate strobe (TAS) re-sampler circuit, according to one embodiment;

[0008] **FIG. 4** is a timing diagram illustrating relative timing of signals used to provide synchronization for receive data being transmitted over an asynchronous digital RF interface, according to one embodiment; and

[0009] **FIG. 5** is a flow chart illustrating one embodiment of a method for providing synchronization for receive data being transmitted over an asynchronous digital radio frequency (RF) interface in a wireless communication device, according to one embodiment.

DETAILED DESCRIPTION

[0010] The illustrative embodiments provide a method and system for synchronizing transmission of receive data over an asynchronous digital radio frequency (RF) interface in a wireless communication device. Using a first timing strobe synchronized to a baseband modem clock, a timing accurate strobe (TAS) re-sampler generates, a second timing strobe synchronized to a radio frequency integrated circuit (RFIC) clock. The TAS re-sampler forwards the second timing strobe to the RFIC and initiates a clock cycle counter to track RFIC clock cycles. In addition, the TAS re-sampler triggers, using the second timing strobe, the RFIC to perform data sampling to collect receive data samples, which the RFIC sends to a baseband First In First Out (FIFO) buffer over the digital RF interface. In response to the clock cycle counter reaching a pre-determined number of RFIC clock cycles corresponding to a first fixed delay, the TAS re-sampler sends a receive enable signal to the baseband FIFO buffer to enable and trigger a reading of data from the FIFO buffer using the RFIC clock. A multi-rate finite impulse response filter (FIR) receives the data from the FIFO buffer and, following a second fixed delay associated with data filtering at the multi-rate FIR, the baseband modem receives data corresponding to the collected data samples. The baseband modem receives this data after a pre-determined fixed delay from generation of the first timing strobe. The various aspects of the method are described below with reference to the figures and in particular with reference to the flow chart of **FIG. 5**.

[0011] In the following detailed description of exemplary embodiments of the disclosure, specific exemplary embodiments in which the various aspects of the disclosure may be practiced are described in sufficient detail to enable those skilled in the art to practice the invention, and it is to be understood that other embodiments may be utilized and that logical, architectural, programmatic, mechanical, electrical and other changes may be made without departing from the spirit or scope of the present disclosure. The following detailed description is, therefore, not to be taken in a limiting sense, and the scope of the present disclosure is defined by the appended claims and equivalents thereof.

[0012] Within the descriptions of the different views of the figures, similar elements are provided similar names and reference numerals as those of the previous figure(s). The specific numerals assigned to the elements are provided solely to aid in the description and are not meant to imply any limitations (structural or functional or otherwise) on the described embodiment.

[0013] It is understood that the use of specific component, device and/or parameter names, such as those of the executing utility, logic, and/or firmware described herein, are for example only and not meant to imply any limitations on the described embodiments. The embodiments may thus be described with different nomenclature and/or terminology utilized to describe the components, devices, parameters, methods and/or functions herein, without limitation. References to any specific protocol or proprietary name in describing one or more elements, features or concepts of the embodiments are provided solely as examples of one implementation, and such references do not limit the extension of the claimed embodiments to embodiments in which different element, feature, protocol, or concept names are utilized. Thus, each term utilized herein is to be given its broadest interpretation given the context in which that terms is utilized.

[0014] As further described below, implementation of the functional features of the disclosure described herein is provided within processing devices and/or structures and can involve use of a combination of hardware, firmware, as well as several software-level constructs (e.g., program code and/or program instructions and/or pseudo-code) that execute to provide a specific utility for the device or a specific functional logic. The presented figures illustrate both hardware components and software and/or logic components.

[0015] With specific reference now to **FIG. 1**, there is depicted a block diagram of an example wireless communication device **100**, within which the functional aspects of the described embodiments may advantageously be implemented. Wireless communication device **100** represents a device that is adapted to transmit and receive electromagnetic signals over an air interface via uplink and/or downlink channels between the wireless communication device **100** and communication network equipment (e.g., base-station **145**) utilizing a plurality of different communication standards including Global System for Mobile Communications (GSM), Code

Division Multiple Access (CDMA), and Long Term Evolution (LTE). In one or more embodiments, the wireless communication device can be a mobile cellular device/phone or smartphone, or laptop, netbook or tablet computing device, or other types of communications devices. Wireless communication device **100** comprises processor **105** and interface circuitry **125**, which includes digital signal processor (DSP) **128**. Processor **105** and interface circuitry **125** are connected to memory component **110** via signal bus **102**. Wireless communication device **100** includes one or more input/output (I/O) devices **129** and also includes transceiver **130** for sending and receiving communication signals. In at least some embodiments, the sending and receiving of communication signals occur wirelessly and are facilitated by one or more antennas **140** coupled to the transceiver **130**. The number of antennas can vary from device to device, ranging from a single antenna to two or more antennas, and the presentation within wireless communication device **100** of a single antenna is merely for illustration. Wireless communication device **100** is able to wirelessly communicate to base transceiver system (BTS)/base-station **145** via antenna **140**. Transceiver **130** comprises radio frequency integrated circuit (RFIC) **132** and baseband integrated circuit (BBIC) **133** which is described in greater detail in **FIG. 2**.

[0016] In addition to the above described hardware components of wireless communication device **100**, various features of the invention may be completed/supported via software (or firmware) code or logic stored within memory **110** (or other storage **117**) or local memory **150** and executed by DSP **128**, processor **105** or local processor **138** of BBIC **133**. Thus, for example, illustrated within memory **110** and/or local memory **150** are a number of software/firmware/logic components/modules, including radio access technology (RAT) configuration data **114**, applications **118** and Timing Accurate Strobe (TAS) utility **136**. In one embodiment, BBIC **133** comprises a baseband processor, which can be described as a digital signal processor (DSP), and a memory or storage system. According to one aspect of the disclosure, the memory/storage system includes therein firmware, such as a TAS utility, that supports the various processing functions of BBIC **133**. In one embodiment, TAS utility **136** is executed on processor **105** to provide TAS logic **120**.

[0017] The various components within wireless communication device **100** can be electrically and/or communicatively coupled together as illustrated in **FIG. 1**. As

utilized herein, the term "communicatively coupled" means that information signals are transmissible through various interconnections between the components. The interconnections between the components can be direct interconnections that include conductive transmission media, or may be indirect interconnections that include one or more intermediate electrical components. Although certain direct interconnections are illustrated in **FIG. 1**, it is to be understood that more, fewer or different interconnections may be present in other embodiments.

[0018] **FIG. 2** provides a block diagram representation of a receiver operating within transceiver **130**, according to one embodiment. Receiver **200** comprises RFIC **132** and BBIC **133** coupled together by an asynchronous digital radio frequency (RF) interface comprising first asynchronous digital RF interface component (**206**) within RFIC **132** and second asynchronous digital RF interface component (**208**) within BBIC **133**. BBIC **133** comprises a series of linearly interconnected functional components, including receiver in-phase and quadrature (RXIQ) FIF0 **210**, multi-rate FIR **214**, baseband modem **216**, Layer 1 (L1) timer **218**, and TAS re-sampler **224**. Baseband modem **216** is coupled to an output port of multi-rate FIR **214**. Baseband modem **216** is also coupled to a clock generator and/or timer illustrated as L1 timer **218**. TAS re-sampler **224** receives from L1 timer **218** a first timing strobe illustrated as TAS trigger **220**. RFIC **132** samples data from an antenna (e.g., antenna **140**) and forwards the sampled data over the digital RF interface. The sampled data is received as digital RF bursts of RXIQ data **204** by RXIQ First In First Out (FIFO) buffer **210**, also referred to herein as baseband buffer **210**, within BBIC **133**.

[0019] In one embodiment, TAS re-sampler **224** generates a second timing strobe (e.g., second timing strobe **330** in **FIG. 3A** and **3B**) which TAS re-sampler **224** forwards as re-sampler output signal **230** to RFIC **132** over the digital RF interface. In another embodiment, illustrated in **FIG. 3B**, TAS re-sampler **224** propagates the first timing strobe (i.e., TAS trigger **220**) to the output port of TAS re-sampler **224** as re-sampler output signal **230**. As a result, TAS re-sampler **224** yields re-sampler output signal **230** which is one of (a) a synchronized re-sampled signal (e.g., second timing strobe **330**), and (b) the first timing strobe (e.g., TAS trigger **220**), which is not resampled by TAS re-sampler **224**. TAS re-sampler **224** provides re-sampler output signal **230** to RFIC **132**. In addition, TAS re-sampler **224** generates a receive enable

signal illustrated as RXIQ Enable **226** which TAS re-sampler **224** sends to baseband buffer **210** to enable and trigger the reading of RXIQ data from baseband buffer **210**.

[0020] Receiver **200** is configured to re-establish synchronization in response to at least one of (i) switching from a first receive mode to a second receive mode, (ii) restarting a baseband modem clock to communicate data following a sleep mode period and (iii) initiation of a power on procedure of wireless communication device **100**. For example, wireless communication device **100** can enter a compression mode in advance of switching from one mode to another. The compression or compressed mode is a radio path feature that enables wireless communication device **100** to maintain the current connection on a certain frequency while performing measurements on another frequency. This allows wireless communication device **100** to monitor neighboring cells on another frequency or radio access technology (RAT) such as GSM. Compressed mode means that transmission and reception are halted for a short time, such as a few milliseconds in order to perform a measurement on another frequency or RAT. As previously described, receiver **200** includes an asynchronous digital radio frequency (RF) interface comprising first asynchronous digital RF interface component (**206**) on RFIC **132** and second asynchronous digital RF interface component (**208**) on BBIC **133**. Receiver **200** is configured to (a) maintain synchronization of data transmission between RFIC **132** and BBIC **133** and/or (b) re-establish synchronization after transmission and/or reception is temporarily halted. Thus, receiver **200** performs a number of operations and/or functions in order to provide and/or re-establish synchronization for receive data being transmitted over the asynchronous digital radio frequency (RF) interface.

[0021] In order to maintain and/or re-establish synchronization, BBIC **133** triggers baseband modem **216** to generate, using L1 timer **218**, TAS trigger **220**, which represents a first timing strobe. TAS trigger **220** is synchronized to a baseband modem clock. For example, the baseband modem clock operates at 1.2288MHz for a code division multiple access (CDMA) mode. In one embodiment, TAS re-sampler **224** generates, using first timing strobe **220**, a second timing strobe (i.e., second timing strobe **330** of **FIG. 3A** and **3B**) synchronized to a radio frequency integrated circuit (RFIC) clock. For example, the RFIC clock can operate at 1.92MHz to support both LTE and CDMA modes. TAS re-sampler **224** forwards the second

timing strobe to RFIC **132** and initiates a clock cycle counter (e.g., counter **316** illustrated in **FIG. 3**) to track RFIC clock cycles. In addition, TAS re-sampler **224** triggers, using re-sampler output signal **230**, RFIC **132** to perform data sampling to collect receive data samples. RFIC **132** sends the collected receive samples to baseband buffer **210** over the digital RF interface **206**, **208**.The receive data samples are received by baseband buffer **210** as digital bursts of RXIQ data **204**. In response to clock cycle counter **316** reaching a pre-determined number of RFIC clock cycles corresponding to a first fixed delay, TAS re-sampler **224** sends a receive enable signal (e.g., RXIQ Enable **226**) to baseband buffer **210** to enable and trigger a reading of data from baseband buffer **210** using the RFIC clock. As a result, TAS re-sampler **224** effectively substitutes a pre-determined fixed latency value in place of a variable latency value corresponding to a transmission of various receive data samples over an asynchronous digital RF interface. Multi-rate finite impulse response filter (FIR) **214** receives the data from baseband buffer **210** and, following a second fixed delay associated with data filtering at multi-rate FIR **214**, baseband modem **216** receives corresponding data at the baseband modem clock rate. TAS re-sampler **224** is described and illustrated in greater detail in **FIGs. 3A** and **3B**.

[0022] Those of ordinary skill in the art will appreciate that the hardware components and basic configurations depicted in **FIGs. 1** and **2** may vary. The illustrative components are not intended to be exhaustive, but rather are representative to highlight essential components that are utilized to implement aspects of the described embodiments. For example, other devices/components may be used in addition to or in place of the hardware and/or firmware depicted. The depicted example is not meant to imply architectural or other limitations with respect to the presently described embodiments and/or the general invention.

[0023] FIG. 3A is a block diagram illustrating a timing accurate strobe (TAS) re-sampler circuit, according to one embodiment. TAS re-sampler **224A** comprises pulse extender **306** and synchronization module **310**, which is coupled to an output of pulse extender **306**. In addition, TAS re-sampler **224A** comprises counter **316**, which is coupled to an output port of synchronization module **310**.

[0024] Pulse extender **306** receives a first clock signal **312** (e.g., the baseband modem clock) at a second input port. Pulse extender **306** yields pulse extended TAS signal

308, which signal is received at a first input port of synchronization module **310**. Synchronization module **310** also receives second clock signal **314** (e.g., the RFIC clock signal) at a second input port. Synchronization module **310** provides second timing strobe **330** to a first input port of counter **316**. Counter **316** also receives second clock signal **314** at a second input port. Counter **316** provides RXIQ Enable signal **226** to RXIQ FIFO **210** (**FIG. 2**). In addition, synchronization module **310** provides second timing strobe **330** to RFIC **132** (**FIGs. 1** and **2**) to trigger RF data sampling. Within this embodiment, second timing strobe **330** is re-sampler output signal **230** of **FIG. 2**.

[0025] In one embodiment, BBIC **133** determines whether timing synchronization is required for receive data by determining whether: (a) a switch in communication mode is being initiated and/or (b) a resumption of communication is being initiated. In response to determining that timing synchronization is required, BBIC **133** triggers L1 timer **218** to send TAS trigger signal **220** to TAS re-sampler **224** and, in particular, to pulse extender **306**. If the baseband clock frequency is a same clock frequency as the RFIC clock frequency, pulse extender **306** propagates TAS trigger **220** as TAS signal **308** to synchronization module **310** without extending a pulse width of TAS trigger **220**, in one embodiment. Synchronization module **310** generates the second timing strobe **330** in response to receipt of one of the first timing strobe and the pulse extended timing strobe. Synchronization module **310** generates the second timing strobe **330** synchronized to the RFIC sampling clock frequency. Synchronization module **310** provides second timing strobe **330** to counter **316**.

[0026] If timing synchronization is required and the baseband modem clock frequency is different from the RFIC clock frequency, pulse extender **306** extends a pulse width of the first timing strobe to provide an extended timing strobe (illustrated as pulse extended TAS signal **308**). Specifically, in response to receiving TAS trigger signal **220** to initiate re-sampling, pulse extender **306** extends a pulse width of the first timing strobe to enable detection of the first timing strobe via the RFIC clock. In one embodiment, BBIC **133** provides information about the mathematical relationship between the baseband modem clock frequency and the RFIC clock frequency to pulse extender **306**, and pulse extender **306** extends the pulse width of the first timing strobe based upon a mathematical relationship between the baseband modem clock

frequency and the RFIC clock frequency. In a related embodiment, BBIC **133** provides information about the mathematical relationship based on characteristics of first clock signal **312**. Pulse extender **306** forwards pulse extended TAS signal **308** to synchronization module **310** which generates second timing strobe **330** synchronized to the RFIC sampling clock frequency, using extended TAS signal **308**. In one embodiment, synchronization module **310** generates the second timing strobe in response to detection of receipt of the first timing strobe at the signal input of synchronization module **310**.

[0027] In response to receiving second timing strobe **330**, counter **316** initiates a count of RFIC clock cycles. When the counter **316** reaches a pre-established and/or pre-determined counter value **134** (**FIG. 1**), which is a number of RFIC clock cycles, counter **316** transmits receive enable signal **226** to baseband buffer **210** to enable and trigger a reading of data from baseband buffer **210** using the RFIC clock. TAS utility **136** pre-determines a counter value and/or uses a pre-determined counter value for a fixed number of RFIC clock cycles used to provide a fixed latency between generation, at the baseband modem, of the second timing strobe and reading of receive data from baseband buffer **210**. Pre-determined counter value **134** (**FIG. 1**) is associated with a preset high probability that receive data is present in baseband buffer **210**, without baseband buffer **210** overflowing. An overall fixed latency can be described with reference to timing references provided by **FIG. 4**. According to one aspect of the disclosure, TAS re-sampler **224A** establishes, using pre-determined counter value **134**, the overall fixed latency that occurs between generation, at baseband modem **216**, of the first timing strobe at time t=T (e.g., T1 of **FIG. 4**) and initiation of receipt of specific baseband data at time t=T+K2 (e.g., T6 of **FIG. 4**) at baseband modem **216**. The specific baseband data corresponds to RF data present at an RF antenna at time t=T + K1 when second timing strobe **330** was generated. K1 and K2 are time constants.

[0028] As previously described, TAS re-sampler **224** re-samples a first timing strobe that is synchronized to the baseband modem clock to generate a second timing strobe that is synchronized to the RFIC clock. However, when the baseband modem clock frequency is different from the RFIC sample clock frequency, pulse extender **306** extends a pulse width of the first timing strobe to provide a pulse extended TAS

signal. Synchronization module **310** uses the pulse extended signal to generate a second timing strobe that is synchronized to the RFIC sample clock. When the baseband modem clock frequency is the same as the RFIC sample clock frequency, pulse extender **306** does not extend the pulse width and provides the first timing strobe to synchronization module **310**. Thus, for instances where the clock frequencies are the same, synchronization module **310** receives the first timing strobe as an input signal. Synchronization module **310** re-samples the received input signal to provide a re-sampled signal that is synchronized to the RFIC clock. The propagation path through pulse extender **306** and synchronization module **310** includes inherent propagation delay when generating the second timing strobe **330**, regardless of whether the clock frequencies are the same or are different.

[0029] FIG. 3B is another block diagram illustrating a timing accurate strobe (TAS) re-sampler circuit, according to an alternate embodiment. Similar to the configuration of **FIG. 3A**, TAS re-sampler **224B** comprises pulse extender **306**, synchronization module **310** coupled to an output of pulse extender **306**, and counter **316** within a first signal propagation path. However, unlike TAS re-sampler **224A** of **FIG. 3A**, TAS re-sampler **224B** of **FIG. 3B** also includes a synchronization bypass path **320** as well as a path selector **302**. Path selector **302** is essentially a multiplexer (MUX) and has two input ports, a single output port, and a select signal, TAS select **304**. TAS trigger signal **220** is received at the input port of pulse extender **306**, and the output of pulse extender **306** is passed to synchronization module **310**. The output signal from synchronization module **310** is a synchronized re-sampled signal, second timing strobe **330**, which is coupled to a first input port of path selector **302**. As shown, TAS trigger signal **220** is also provided at the second input port of path selector **302**, via synchronization bypass path **320**. Synchronization bypass path **320** enables TAS trigger signal **220** to avoid pulse extender **306** and/or synchronization module **310**, and to be available for selection at the second input port of path selector **302** without undergoing signal modification and/or without incurring the delay that occurs along a first signal propagation path. By providing a bypass path around pulse extender **306** and synchronization module **310**, TAS re-sampler **224B** enables TAS trigger signal **220** to avoid the delay inherent when a signal propagates through the pulse extender **306** and synchronization module **310** to generate second timing strobe **330**.

[0030] Counter **316** is coupled to the output port or the output signal line of path selector **302**. TAS select signal **304** is received by path selector **302** from BBIC **133** and selects one of: (a) a delayed re-sampled signal (i.e., second timing strobe **330**) that is synchronized to an RFIC clock; and (b) the first timing strobe (i.e., TAS trigger signal **220**), which is synchronized to the baseband modem clock and which is not re-sampled or delayed. According to one aspect of the embodiment involving use of TAS re-sampler **224B**, BBIC **133** includes logic that determines which of two values to assign to TAS select **304**, from a first value (e.g., a logic 0 or OFF signal) that causes path selector **302** to select the delayed re-sampled signal at the first input port and a second value (e.g., a logic 1 or ON signal) that causes path selector **302** to select the original (i.e., not sampled or delayed) TAS trigger signal **220** at the second input port. The selected input signal is then propagated to the output of path selector **302**, which is also forwarded to counter **316**.

[0031] In one embodiment, BBIC **133** provides TAS select signal **304** as an "ON" signal (i.e., a logic 1) to enable propagation of TAS trigger signal **220** (i.e., the first timing strobe) via the output port of path selector **302**. Alternatively, BBIC **133** provides TAS select signal **304** as an "OFF" signal (i.e., a logic 0) to enable propagation of the time-delayed re-sampled signal, second timing strobe **330**, via the output port of path selector **302**. When BBIC **133** provides an "OFF" signal as TAS select signal **304** to path selector **302**, indicating that a re-sampled signal is desired or required to provide synchronization for receive data, path selector **302** connects second timing strobe **330** received at the first input port to the output port of path selector **302**. Thus, path selector **302** provides second timing strobe **330** to counter **316** and RFIC **132** (**FIGs. 1** and **2**). When BBIC **133** provides an "ON" signal as TAS select signal **304** to path selector **302**, indicating that TAS trigger signal **220**, instead of a re-sampled signal, can be utilized to provide synchronization for transmission of receive data over an asynchronous interface, path selector **302** connects TAS trigger signal **220** received at the second input to the output port of path selector **302**. Accordingly, path selector **302** provides TAS trigger signal **220** to counter **316** and RFIC **132**. In this latter case, TAS trigger signal **220**, the first timing strobe, is received by RFIC **132** as a signal that is not re-sampled and without the

propagation delay inherent with generation of second timing strobe **330** when BBIC **133** provides an "OFF" signal as TAS select signal **304**.

[0032] In one embodiment, TAS select signal **304** is provided as an ON signal to enable path selector **302** to propagate the signal associated with a smaller delay (i.e., TAS trigger signal **220**). In one embodiment, BBIC **133** sets the "OFF" signal as the default setting for TAS select signal **304**. In one implementation, this automatic (default) selection can occur without requiring transmission of a select signal, as the TAS select signal **304** can be a null or zero (0) signal unless specifically changed by BBIC logic triggering a generation of a logic high (1) pulse on the TAS select signal line. It is appreciated that, in an alternate embodiment, path selector **302** can be configured to select the first input in response to the ON signal and the second input in response to the OFF signal. Similarly to the operation of TAS re-sampler **224A**, in response to receipt of re-sampler output signal **230**, counter **316** begins to count RFIC clock cycles. After a pre-determined number of RFIC clock cycles, counter **316** provides RXIQ Enable signal **226** to RXIQ FIFO **210** (**FIG. 2**) to trigger a reading of data from RXIQ FIFO **210**. Upon receipt of re-sampler output signal **230**, RFIC **132** begins RFIC data sampling.

[0033] **FIG. 4** is a timing diagram illustrating a time progression of signals used to provide synchronization for sampled data being transmitted over an asynchronous digital RF interface, according to one embodiment. Timing diagram **400** illustrates a number of time instants "1", "2", "3", "4", "5" and "6" illustrated as circled number references, which collectively define a horizontal time axis (not specifically shown). In addition, timing diagram **400** illustrates a number of information signals including DigRF TAS **402** and L1 TAS trigger **415** and clock signals including RFIC clock signal **406** and baseband modem clock signal **412**. L1 TAS trigger **415** (i.e., the first timing strobe) illustrated at time instant "1" (T1) is synchronized with baseband modem clock signal **412**. DigRF TAS **402** (e.g., second timing strobe **330**) is illustrated at T2 (i.e., time instant "2") corresponding to RFIC clock signal **406**. Also illustrated in timing diagram **400** is Digital RF RX data burst signal **404**. Timing diagram **400** also comprises RXIQ Enable signal **410**. "RXIQ re-sample Cnt" signal **408** is also illustrated in timing diagram **400**. Also illustrated in timing diagram **400**

is "IQ flow into multi-rate FIR" signal **414** and "IQ flow into baseband modem" signal **416**.

[0034] At T1, L1 timer **218** generates L1 TAS trigger **415** in synchronization with baseband modem clock signal. At T2, TAS re-sampler **224** then generates Dig RF TAS **402** in synchronization with RFIC clock signal **406**. As a result, a clock pulse of RFIC clock signal **406** coincides with a pulse of DigRF TAS **402** occurring at T2. Dig RF TAS **402** corresponds to second timing strobe **330** (**FIG. 3A**) that is received by RFIC **132** from TAS re-sampler **224** via Digital RF interfaces **206** and **208**. Initiation of RF data sampling at an antenna begins after a delay (e.g., delay **418**) that follows the occurrence of the pulse of DigRF TAS **402** at T2. At T3, counter **316** begins counting RFIC clock signals, and the count of RFIC clock cycles correspond to the number of pulses indicated by "RXIQ re-sample Cnt" signal **408**. In addition, variable propagation/transmission latency **420** is illustrated as a time interval between RF sampling at the antenna and receipt of corresponding data provided at an initiation of Digital RF RX data burst signal **404** at RXIQ FIFO **210**. T2 and T3 represent substantially a same time instant on a time axis common to all waveforms and/or signals illustrated in timing diagram **400**. At T4, following fixed latency **422** established by counter **316** using the pre-established counter value, counter **316** generates RX IQ enable signal **410**. Counter **316** sends RX IQ enable signal **410** to RXIQ FIFO **210** to trigger the reading of data, at T5, from RXIQ FIFO **210** into multi-rate FIR **214** at the RFIC clock rate. Multi-rate FIR **214** receives data read from RXIQ FIFO **210** as "IQ flow into multi-rate FIR" signal **414**. At T6, following constant multi-rate FIR delay **424** associated with data filtering at multi-rate FIR **214**, baseband modem **216** receives baseband modem IQ input data signal illustrated as "IQ flow into baseband modem" signal **416** at the baseband modem clock rate. As illustrated, TAS re-sampler **224A** provides an overall fixed delay **426** from the generation of the first timing strobe to initiation of receipt at baseband modem **216** of specific receive data. The specific receive data is baseband data corresponding to RF data present at the RF antenna when the first timing strobe is generated. Furthermore, the RF data represents data that is previously sampled using second timing strobe **330**.

[0035] **FIG. 5** is a flow chart illustrating one embodiment of the method by which the

above processes of the illustrative embodiments can be implemented. Specifically, **FIG. 5** illustrates one embodiment of a method for providing synchronization for receive data being transmitted over an asynchronous digital radio frequency (RF) interface in a wireless communication device, according to one embodiment. Although the method illustrated by **FIG. 5** may be described with reference to components and functionality illustrated by and described in reference to **FIGs. 1-4**, it should be understood that this is merely for convenience and alternative components and/or configurations thereof can be employed when implementing the method. Certain portions of the method may be completed by TAS utility **136** executing on one or more processors (processor **105** or DSP **128**) within wireless communication device **100** (**FIG. 1**), or local processor **138** or controller of BBIC **133** (**FIG. 1**, **2** or **3**), or a processing unit or controller on receiver IC **200**. The executed processes then control specific operations of, or on, BBIC **133**. For simplicity in describing the methods, all method processes are described from the perspective of BBIC **133** and specifically TAS re-sampler **224**.

[0036] The method of **FIG. 5** begins at initiator block **501** and proceeds to block **502** at which a clock generator and/or timer (e.g., an L1 timer) associated with baseband modem **216** generates a first timing strobe synchronized to a baseband modem clock. At block **504**, TAS re-sampler **224** initiates re-sampling of the first timing strobe by extending the pulse width of first timing strobe to enable detection via an RFIC clock. At block **506**, TAS re-sampler **224** uses the strobe having extended pulse width to generate second timing strobe synchronized to the RFIC clock. At block **508**, TAS re-sampler **224** forwards the second timing strobe to the RFIC. At block **510**, TAS re-sampler **224** initiates clock cycle counter **316** to track RFIC clock cycles. At block **512**, TAS re-sampler **224** triggers, using the second timing strobe, data sampling at RFIC **132** to collect receive data samples. In addition, at block **514**, TAS re-sampler **224** triggers RFIC **132** to provide receive data samples to baseband FIFO buffer **210** via the asynchronous RF interface.

[0037] At decision block **516**, TAS re-sampler **224** determines whether clock cycle counter **316** has reached/counted a pre-determined number of RFIC clock cycles corresponding to a first fixed delay. If, at decision block **516**, TAS re-sampler **224**

determines that the clock cycle counter has reached the pre-determined number of RFIC clock cycles, TAS re-sampler **224** sends receive enable signal **226** to baseband FIFO buffer **210** to enable and trigger a reading of data from FIFO buffer **210** using the RFIC clock, as shown at block **518**. However, if at decision block **516**, TAS re-sampler **224** determines that clock cycle counter **316** has not yet reached or counted the pre-determined number of RFIC clock cycles, the process iterates at decision block **516**. At block **520**, multi-rate finite impulse response filter (FIR) **214** receives the data from FIFO buffer **210**. Following a second fixed delay associated with data filtering at multi-rate FIR **214**, baseband modem **216** receives specific data at the baseband modem clock rate, at block **522**. The receipt of specific data by baseband modem **216** is initiated by the receipt of specific baseband data corresponding to RF data present at the RF antenna when the first timing strobe is generated. The process ends at block **524**.

[0038] The flowcharts and block diagrams in the various figures presented and described herein illustrate the architecture, functionality, and operation of possible implementations of systems, methods and computer program products according to various embodiments of the present disclosure. In this regard, each block in the flowcharts or block diagrams may represent a module, segment, or portion of code, which comprises one or more executable instructions for implementing the specified logical function(s). It should also be noted that, in some alternative implementations, the functions noted in the block may occur out of the order noted in the figures. For example, two blocks shown in succession may, in fact, be executed substantially concurrently, or the blocks may sometimes be executed in the reverse order, depending upon the functionality involved. Thus, while the method processes are described and illustrated in a particular sequence, use of a specific sequence of processes is not meant to imply any limitations on the disclosure. Changes may be made with regards to the sequence of processes without departing from the spirit or scope of the present disclosure. Use of a particular sequence is therefore, not to be taken in a limiting sense, and the scope of the present disclosure extends to the appended claims and equivalents thereof.

[0039] In some implementations, certain processes of the methods are combined, performed simultaneously or in a different order, or perhaps omitted, without

deviating from the spirit and scope of the disclosure. It will also be noted that each block of the block diagrams and/or flowchart illustration, and combinations of blocks in the block diagrams and/or flowchart illustration, can be implemented by special purpose hardware-based systems that perform the specified functions or acts, or combinations of special purpose hardware and computer instructions.

[0040] While the disclosure has been described with reference to exemplary embodiments, it will be understood by those skilled in the art that various changes may be made and equivalents may be substituted for elements thereof without departing from the scope of the disclosure. In addition, many modifications may be made to adapt a particular system, device or component thereof to the teachings of the disclosure without departing from the essential scope thereof. Therefore, it is intended that the disclosure not be limited to the particular embodiments disclosed for carrying out this disclosure, but that the disclosure will include all embodiments falling within the scope of the appended claims. Moreover, the use of the terms first, second, etc. do not denote any order or importance, but rather the terms first, second, etc. are used to distinguish one element from another.

[0041] The terminology used herein is for the purpose of describing particular embodiments only and is not intended to be limiting of the disclosure. As used herein, the singular forms "a", "an" and "the" are intended to include the plural forms as well, unless the context clearly indicates otherwise. It will be further understood that the terms "comprises" and/or "comprising," when used in this specification, specify the presence of stated features, integers, steps, operations, elements, and/or components, but do not preclude the presence or addition of one or more other features, integers, steps, operations, elements, components, and/or groups thereof.

[0042] The corresponding structures, materials, acts, and equivalents of all means or step plus function elements in the claims below are intended to include any structure, material, or act for performing the function in combination with other claimed elements as specifically claimed. The description of the present disclosure has been presented for purposes of illustration and description, but is not intended to be exhaustive or limited to the disclosure in the form disclosed. Many modifications and variations will be apparent to those of ordinary skill in the art without departing from the scope and spirit of the disclosure. The embodiment was chosen and described in

order to best explain the principles of the disclosure and the practical application, and to enable others of ordinary skill in the art to understand the disclosure for various embodiments with various modifications as are suited to the particular use contemplated.

CLAIMS

What is claimed is:

1. A method of synchronizing receive data across radio frequency (RF) components and baseband components within a wireless communication device, the method comprising:

generating a first timing strobe synchronized with a baseband modem clock;

generating, using the first timing strobe, a second timing strobe synchronized with an RFIC sample clock;

forwarding the second timing strobe to the RFIC;

initiating a time delay counter to track RFIC clock cycles;

triggering, using the second timing strobe, data sampling at the RFIC to collect receive data samples, wherein said receive data samples are provided to a baseband First In First Out (FIFO) buffer;

in response to the time delay counter reaching a pre-determined fixed number of RFIC clock cycles, reading receive data from the baseband FIFO buffer using the RFIC clock; and

receiving data at the baseband modem.

2. The method of Claim 1, wherein said generating the second timing strobe further comprises:

extending a pulse width of the first timing strobe to provide an extended timing strobe that enables detection of the first timing strobe;

wherein the pulse width of the first timing strobe is extended based on a mathematical relationship between the baseband modem clock frequency and the RFIC clock frequency; and

generating the second timing strobe synchronized to the RFIC sampling clock frequency in response to detection of the first timing strobe.

3. The method of Claim 1, wherein said generating the second timing strobe further comprises:

determining that said baseband modem clock frequency and said RFIC sample clock frequency are substantially a same frequency; and

in response to the baseband clock frequency being a same clock frequency as the RFIC clock frequency, generating the second timing strobe utilizing said first timing strobe that is synchronized to the baseband modem clock frequency, wherein said second timing strobe is synchronized to the RFIC sample clock frequency and is a re-sampled, synchronized version of the first timing strobe.

4. The method of Claim 1, wherein said reading further comprises:

providing a receive enable signal to trigger reading of receive data from the FIFO when the time delay counter reaches the pre-determined fixed number of RFIC clock cycles;

forwarding the receive data that is read from the FIFO to one of a fixed delay multi-rate filter and the baseband modem; and

filtering, using a fixed delay multi-rate filter associated with the baseband modem, the receive data to provide to the baseband modem filtered receive data using a data rate synchronized with the baseband modem clock.

5. The method of Claim 1, wherein said generating the second timing strobe further comprises:

determining whether a baseband modem clock frequency is different from an RFIC clock frequency;

in response to the baseband modem clock frequency being different from the RFIC clock frequency: (a) re-sampling the first timing strobe to an RFIC sample clock domain to generate the second timing strobe; and (b) triggering an initiation of the timing delay counter; and

in response to the baseband clock frequency being a same clock frequency as the RFIC clock frequency, (a) providing the first timing strobe as a re-sampler output signal to the RFIC to trigger data sampling, wherein the first timing strobe is not re-sampled, and (b) triggering an initiation of the timing delay counter.

6. The method of Claim 1, wherein said reading further comprises:

pre-determining a counter value for a fixed number of RFIC clock cycles used to provide a fixed latency between generation, at the baseband modem, of the second timing strobe and reading of receive data from the FIFO;

wherein the pre-determined counter value is associated with a preset high probability that receive data is present in the FIFO, without the FIFO overflowing; and

wherein the fixed latency occurs between generation of the second timing strobe and reading, from the FIFO, receive data corresponding to an RF sample that is present at the RF antenna when the second timing strobe is generated; and

initiating, using the pre-determined counter value, establishment of an overall fixed latency that occurs between generation, at the baseband modem, of the first timing strobe and receipt, at the baseband modem, baseband data corresponding to an RF sample that is present at the RF antenna when the first timing strobe is generated.

7. The method of Claim 1, further comprising:

substituting a pre-determined fixed latency in place of each of a plurality of variable latency values associated with transmission of receive data over an asynchronous digital RF interface.

8. The method of Claim 1, wherein said generating the first timing strobe and said generating the second timing strobe are initiated in response to at least one of: (i) switching from a first receive mode to a second receive mode, (ii) restarting a baseband modem clock to communicate data following a sleep mode period and (iii) initiation of a power on procedure.

9. A baseband integrated circuit (BBIC) comprising:

a baseband modem clock that operates at a baseband modem clock frequency;

a timer module that utilizes the baseband modem clock to generate a first timing strobe that is synchronized with the baseband modem clock;

a timing strobe re-sampler having a counter, wherein the timing strobe re-sampler is coupled to the timer module and the timing strobe re-sampler: generates,

using the first timing strobe, a second timing strobe that is synchronized with an RFIC sample clock having an RFIC sample clock frequency; forwards the second timing strobe to the RFIC; and triggers, using the second timing strobe, data sampling at the RFIC to collect receive data samples, wherein said receive data samples are provided to a baseband First In First Out (FIFO) buffer;

wherein the counter: initiates a count of RFIC clock cycles; and in response to the count of RFIC clock cycles reaching a pre-determined fixed number of RFIC clock cycles, triggers a reading of receive data from the baseband FIFO buffer using the RFIC clock;

a baseband modem that receives data using the baseband modem clock; and

wherein the baseband modem clock frequency and the RFIC sample clock frequency are one of: (a) a substantially identical frequency; and (b) a different frequency.

10. The BBIC of Claim 9, wherein the timing strobe re-sampler further comprises:

a pulse extender that: extends a pulse width of the first timing strobe to provide an extended timing strobe that enables detection of the first timing strobe, wherein the pulse width of the first timing strobe is extended based upon a mathematical relationship between the baseband modem clock frequency and the RFIC clock frequency; and

a synchronization module that: receives, from the pulse extender, one of the first timing strobe and the extended timing strobe; and generates the second timing strobe synchronized to the RFIC sampling clock frequency in response to detection of the first timing strobe.

11. The BBIC of Claim 9, wherein the BBIC further comprises:

a fixed delay multi-rate finite impulse response (FIR) filter that obtains receive data from the FIFO, and filters the receive data to provide to the baseband modem filtered receive data using a data rate synchronized with the baseband modem clock;

wherein the counter provides a receive enable signal to trigger reading of receive data from the FIFO when the count of RFIC clock cycles reaches the pre-determined fixed number of RFIC clock cycles.

12. The BBIC of Claim 9, wherein the timing strobe re-sampler:

initiates generation of the second timing strobe in response to at least one of (i) switching from a first receive mode to a second receive mode, (ii) restarting a baseband modem clock to communicate data following a sleep mode period and (iii) initiating a power on procedure;

determines whether the baseband modem clock frequency is different from the RFIC clock frequency;

in response to the baseband modem clock frequency being different from the RFIC clock frequency: (a) re-samples the first timing strobe to the RFIC sample clock domain to generate the second timing strobe; and (b) triggers an initiation of the timing delay counter; and

in response to the baseband clock frequency being a same clock frequency as the RFIC clock frequency, (a) provides the first timing strobe as a re-sampler output signal to the RFIC to trigger data sampling, wherein the first timing strobe is not re-sampled; and (b) triggers an initiation of the timing delay counter.

13. The BBIC of Claim 9, wherein the timing strobe re-sampler:

pre-determines a counter value for a fixed number of RFIC clock cycles associated with a preset high probability that receive data is present in the FIFO, without the FIFO overflowing;

provides, utilizing the pre-determined counter value, a fixed latency between generation of the second timing strobe and reading of receive data from the FIFO;

wherein the fixed latency occurs between generation of the second timing strobe and reading, from the FIFO, receive data corresponding to an RF sample that is present at the RF antenna when the second timing strobe is generated;

establishes, using the pre-determined counter value, an overall fixed latency that occurs between generation, at the baseband modem, of the first timing strobe and receipt, at the baseband modem, baseband data corresponding to an RF sample that is present at the RF antenna when the first timing strobe is generated; and

substitutes the pre-determined fixed latency in place of each of a plurality of variable latency values associated with transmission of receive data over an asynchronous digital RF interface.

14. The BBIC of Claim 9, wherein the timing strobe re-sampler further comprises:

a path selector having at least two data input ports, a control signal input port and an output port, wherein the at least two data input ports include a first input port that receives the second timing strobe from the synchronization module;

a synchronization bypass path that provides the first timing strobe to a second input port of the path selector;

wherein the path selector comprises a control signal port that receives a select signal used to selectively connect one of the first timing strobe and the second timing strobe to the output port of the path selector; and

wherein the BBIC provides the select signal to the path selector as one of: (a) an OFF signal provided by a logical 0 to propagate the second timing strobe to the RFIC; and (b) an ON signal provided by a logical 1 to propagate the first timing strobe to the RFIC.

15. A wireless communication device comprising:

a radio frequency integrated circuit (RFIC);

a baseband integrated circuit (BBIC) connected by a digital RF interface to the RFIC and comprising:

a baseband modem clock that operates at a baseband modem clock frequency;

a timer module that utilizes the baseband modem clock to generate a first timing strobe that is synchronized with the baseband modem clock; and

a timing strobe re-sampler having a counter, wherein the timing strobe re-sampler is coupled to the timing module and which: generates, using the first timing strobe, a second timing strobe that is synchronized with an RFIC sample clock having an RFIC sample clock frequency; forwards the second timing strobe to the RFIC; and triggers, using the second timing strobe, data

sampling at the RFIC to collect receive data samples, wherein said receive data samples are provided to a baseband First In First Out (FIFO) buffer;

wherein the counter: initiates a count of RFIC clock cycles; and in response to the count of RFIC clock cycles reaching a pre-determined fixed number of RFIC clock cycles, triggers a reading of receive data from the baseband FIFO buffer using the RFIC clock; and

a baseband modem that receives data using the baseband modem clock;

wherein the baseband modem clock frequency and the RFIC sample clock frequency are one of: (a) a substantially identical frequency; and (b) a different frequency.

16. The wireless communication device of Claim 15, wherein the timing strobe re-sampler further comprises:

a pulse extender that: extends a pulse width of the first timing strobe to provide an extended timing strobe that enables detection of the first timing strobe, wherein the pulse width of the first timing strobe is extended based upon a mathematical relationship between the baseband modem clock frequency and the RFIC clock frequency; and

a synchronization module that: receives, from the pulse extender, one of the first timing strobe and the extended timing strobe; and generates the second timing strobe synchronized to the RFIC sampling clock frequency in response to detection of the first timing strobe.

17. The wireless communication device of Claim 15, wherein the BBIC further comprises:

a fixed delay multi-rate finite impulse response (FIR) filter that obtains receive data from the FIFO, and filters the receive data to provide to the baseband modem filtered receive data using a data rate synchronized with the baseband modem clock; and

wherein the counter provides a receive enable signal to trigger reading of receive data from the FIFO when the count of RFIC clock cycles reaches the pre-determined fixed number of RFIC clock cycles.

18. The wireless communication device of Claim 15, wherein the timing strobe re-sampler:

initiates generation of the second timing strobe in response to at least one of (i) switching from a first receive mode to a second receive mode, (ii) restarting a baseband modem clock to communicate data following a sleep mode period and (iii) initiating a power on procedure;

determines whether the baseband modem clock frequency is different from the RFIC clock frequency;

in response to the baseband modem clock frequency being different from the RFIC clock frequency: (a) re-samples the first timing strobe to the RFIC sample clock domain to generate the second timing strobe; and (b) triggers an initiation of the timing delay counter; and

in response to the baseband clock frequency being a same clock frequency as the RFIC clock frequency, (a) provides the first timing strobe as a re-sampler output signal to the RFIC to trigger data sampling, wherein the first timing strobe is not re-sampled; and (b) triggers an initiation of the timing delay counter.

19. The wireless communication device of Claim 15, wherein the timing strobe re-sampler:

pre-determines a counter value for a fixed number of RFIC clock cycles associated with a preset high probability that receive data is present in the FIFO, without the FIFO overflowing;

provides, utilizing the pre-determined counter value, a fixed latency between generation of the second timing strobe and reading of receive data from the FIFO;

wherein the fixed latency occurs between generation of the second timing strobe and reading, from the FIFO, receive data corresponding to an RF sample that is present at the RF antenna when the second timing strobe is generated;

establishes, using the pre-determined counter value, an overall fixed latency that occurs between generation, at the baseband modem, of the first timing strobe and receipt, at the baseband modem, baseband data corresponding to an RF sample that is present at the RF antenna when the first timing strobe is generated; and

substitutes a pre-determined fixed latency for each of a plurality of variable latency values associated with transmission of receive data over the asynchronous digital RF interface.

20. The wireless communication device of Claim 15, wherein the timing strobe re-sampler further comprises:

a path selector having at least two data input ports, a control signal input port and an output port, wherein the at least two data input ports include a first input port that receives the second timing strobe from the synchronization module;

a synchronization bypass path that provides the first timing strobe to a second input port of the path selector;

wherein the path selector comprises a control signal port that receives a select signal used to selectively connect one of the first timing strobe and the second timing strobe to the output port of the path selector; and

wherein the BBIC provides the select signal to the path selector as one of: (a) an OFF signal provided by a logical 0 to propagate the second timing strobe to the RFIC; and (b) an ON signal provided by a logical 1 to propagate the first timing strobe to the RFIC.

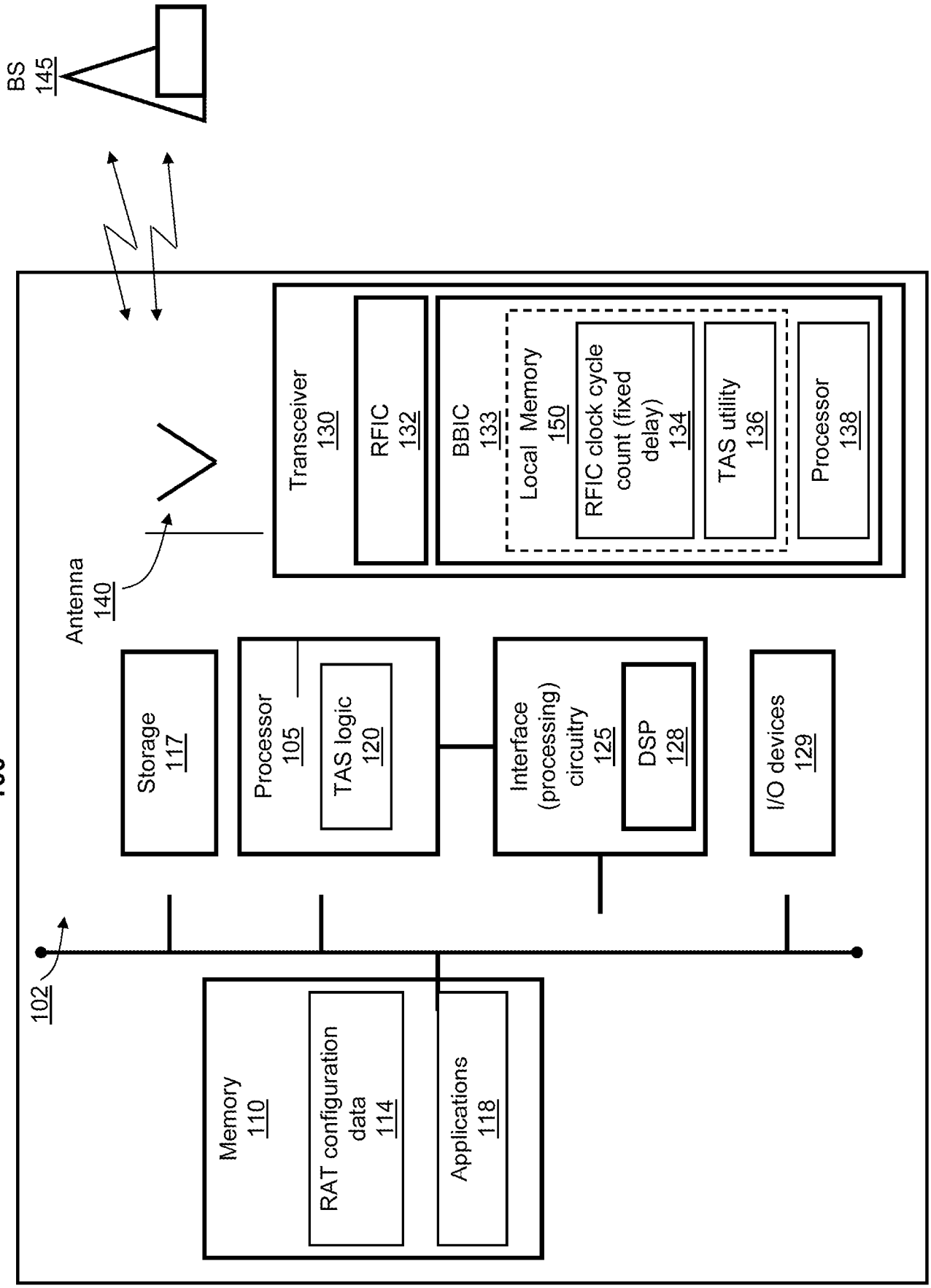
BS
145
100
Antenna
140
Transceiver
130
RFIC
132
BBIC
133
Local Memory
150
RFIC clock cycle count (fixed delay)
134
TAS utility
136
Processor
138
Storage
117
Processor
105
TAS logic
120
Interface (processing) circuitry
125
DSP
128
I/O devices
129
102
Memory
110
RAT configuration data
114
Applications
118

FIG. 1

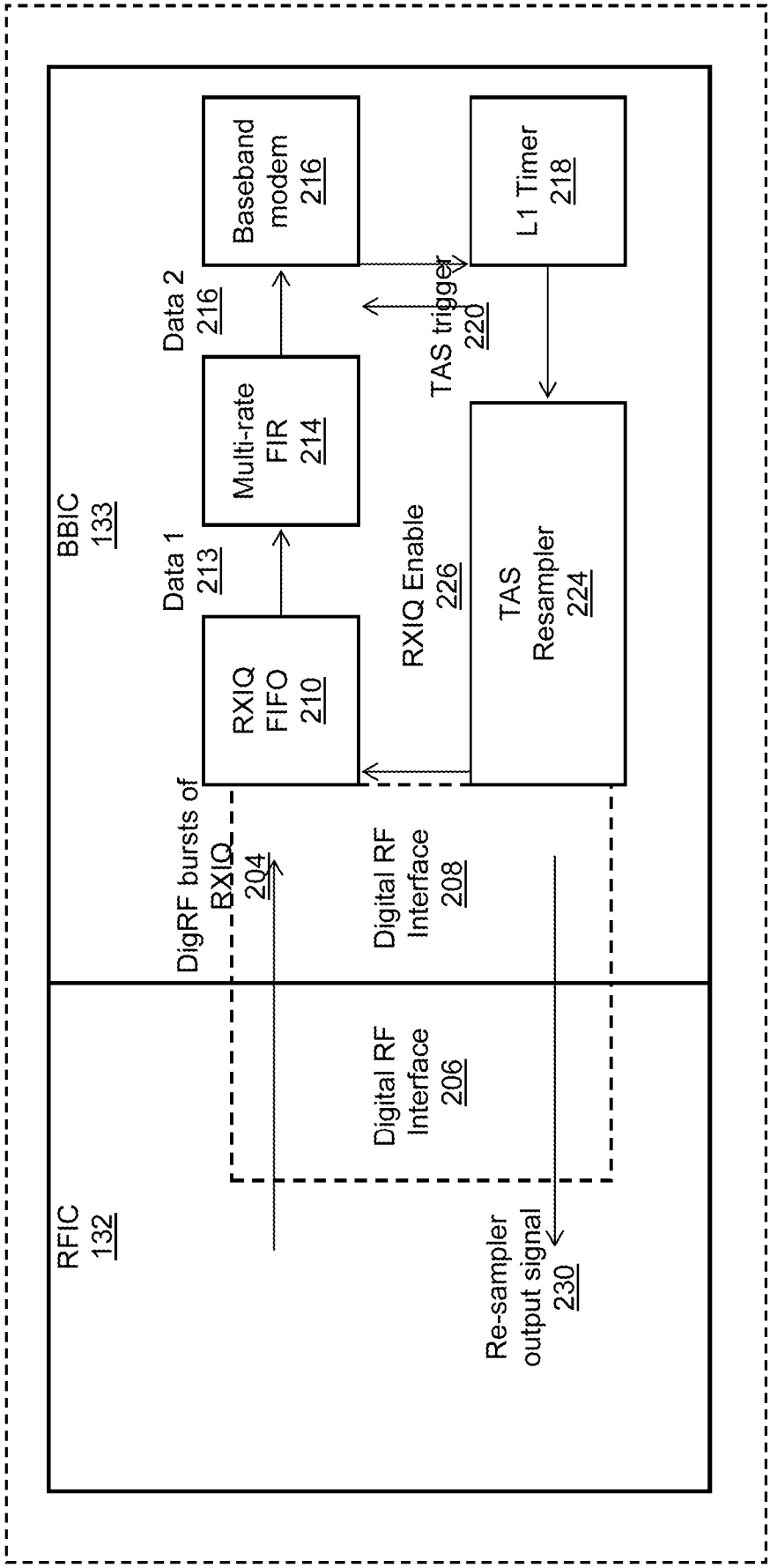
200
BBIC
133
RFIC
132
Baseband modem 216
L1 Timer 218
Data 2 216
TAS trigger 220
Multi-rate FIR 214
Data 1 213
RXIQ Enable 226
TAS Resampler 224
RXIQ FIFO 210
DigRF bursts of RXIQ 204
Digital RF Interface 208
Digital RF Interface 206
Re-sampler output signal 230

FIG. 2

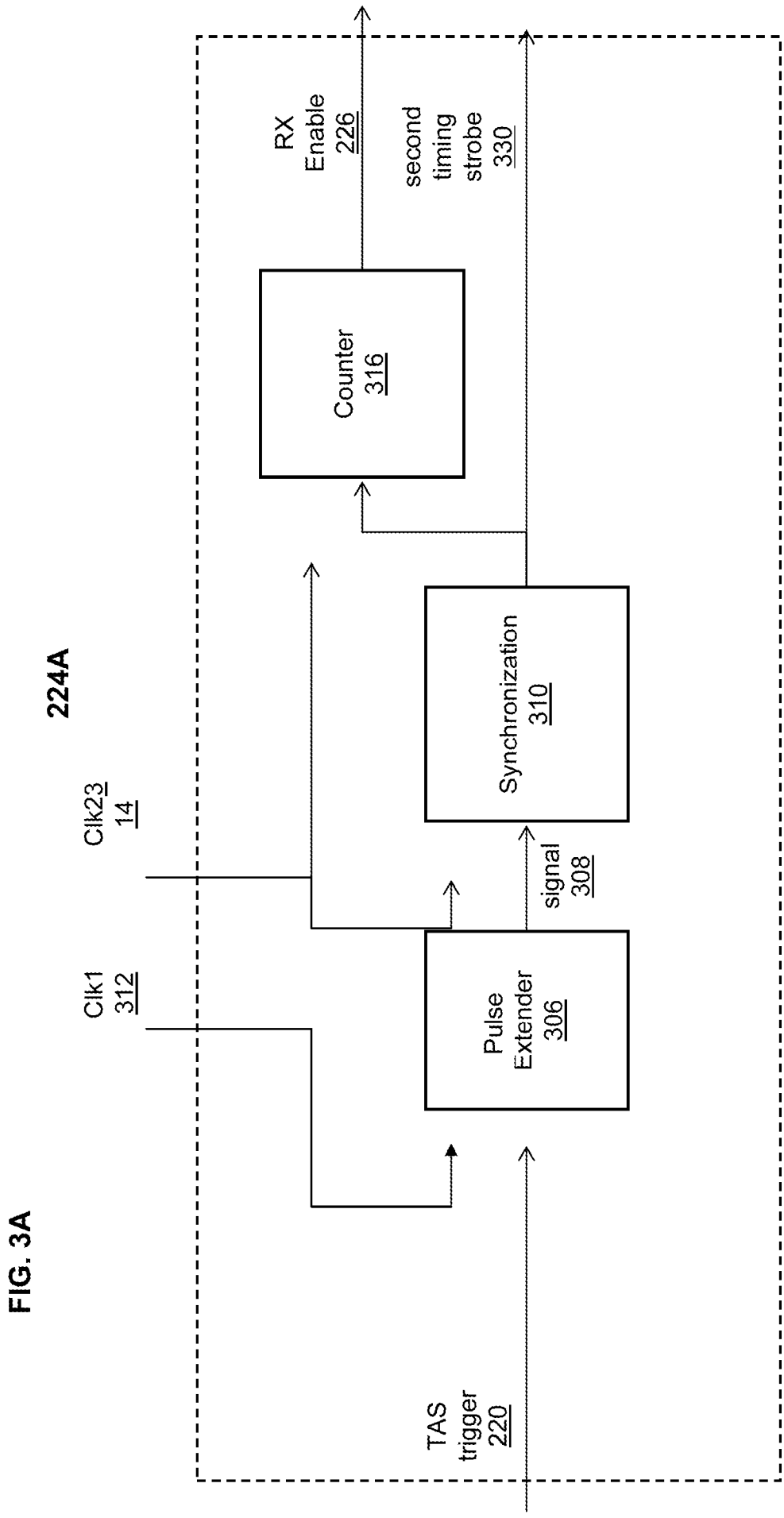
224A
Clk23
14
Clk1
312
Pulse
Extender
306
signal
308
Synchronization
310
Counter
316
RX
Enable
226
second
timing
strobe
330
TAS
trigger
220

FIG. 3A

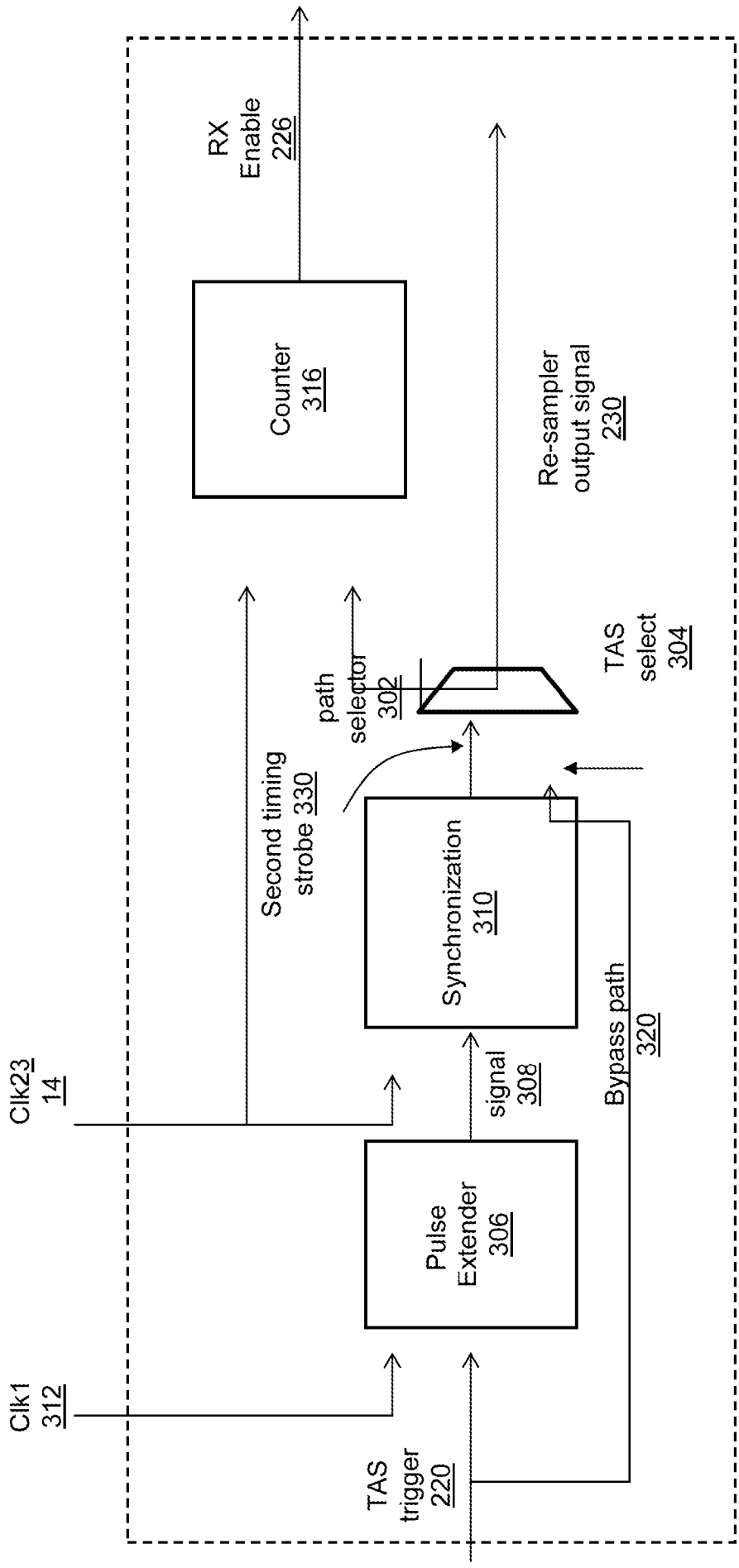
224B
RX Enable 226
Counter 316
Re-sampler output signal 230
TAS select 304
path selector 302
Second timing strobe 330
Synchronization 310
Clk23 14
signal 308
Bypass path 320
Pulse Extender 306
Clk1 312
TAS trigger 220

FIG. 3B

FIG. 4

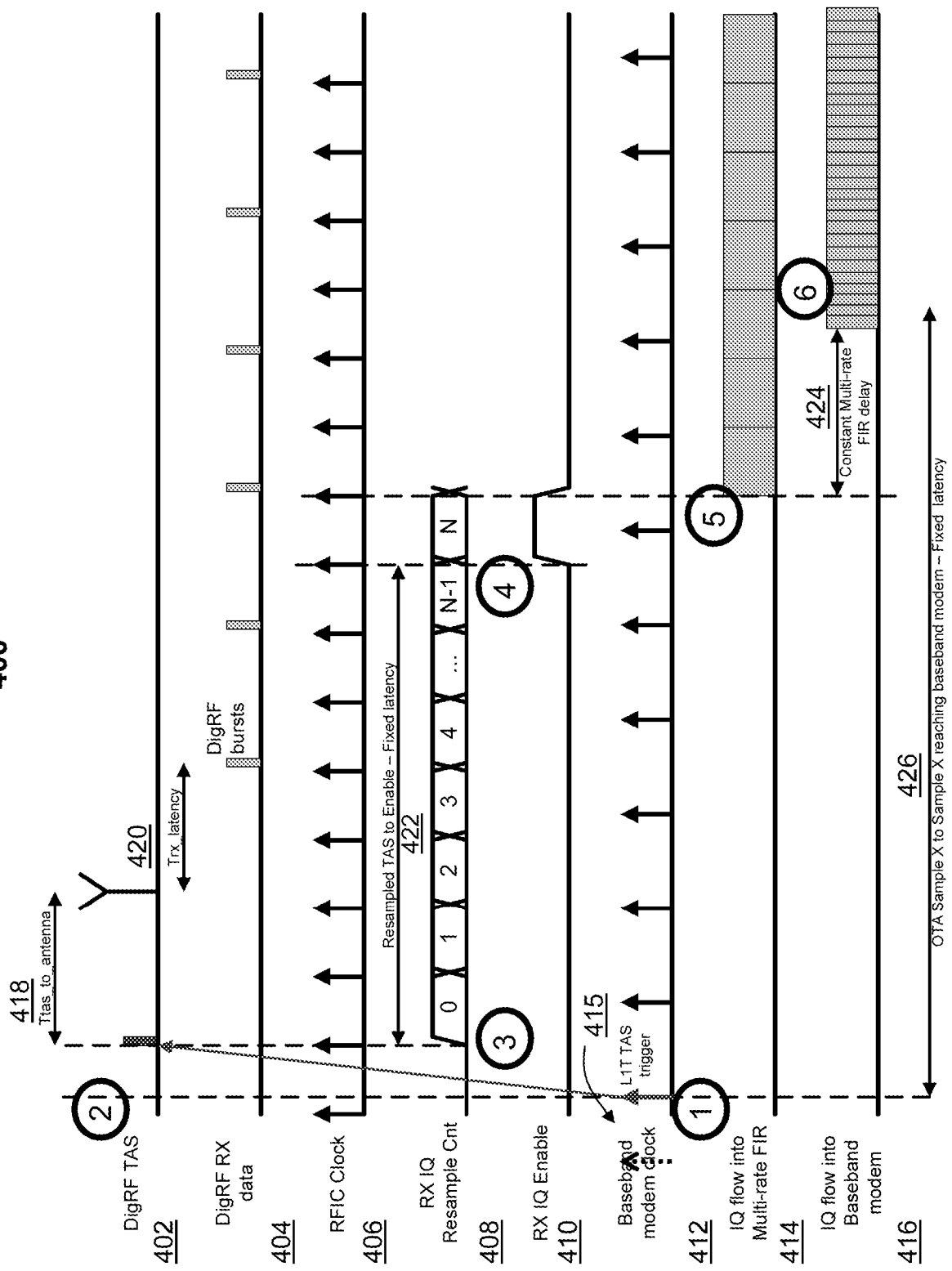
400
DigRF TAS
402
DigRF RX data
404
RFIC Clock
406
RX IQ Resample Cnt
408
RX IQ Enable
410
Baseband modem clock
412
IQ flow into Multi-rate FIR
414
IQ flow into Baseband modem
416
418
Ttas_to_antenna
420
Trx_latency
DigRF bursts
Resampled TAS to Enable – Fixed latency
422
0
1
2
3
4
...
N-1
N
415
L1T TAS trigger
424
Constant Multi-rate FIR delay
426
OTA Sample X to Sample X reaching baseband modem – Fixed latency
1
2
3
4
5
6

FIG. 5

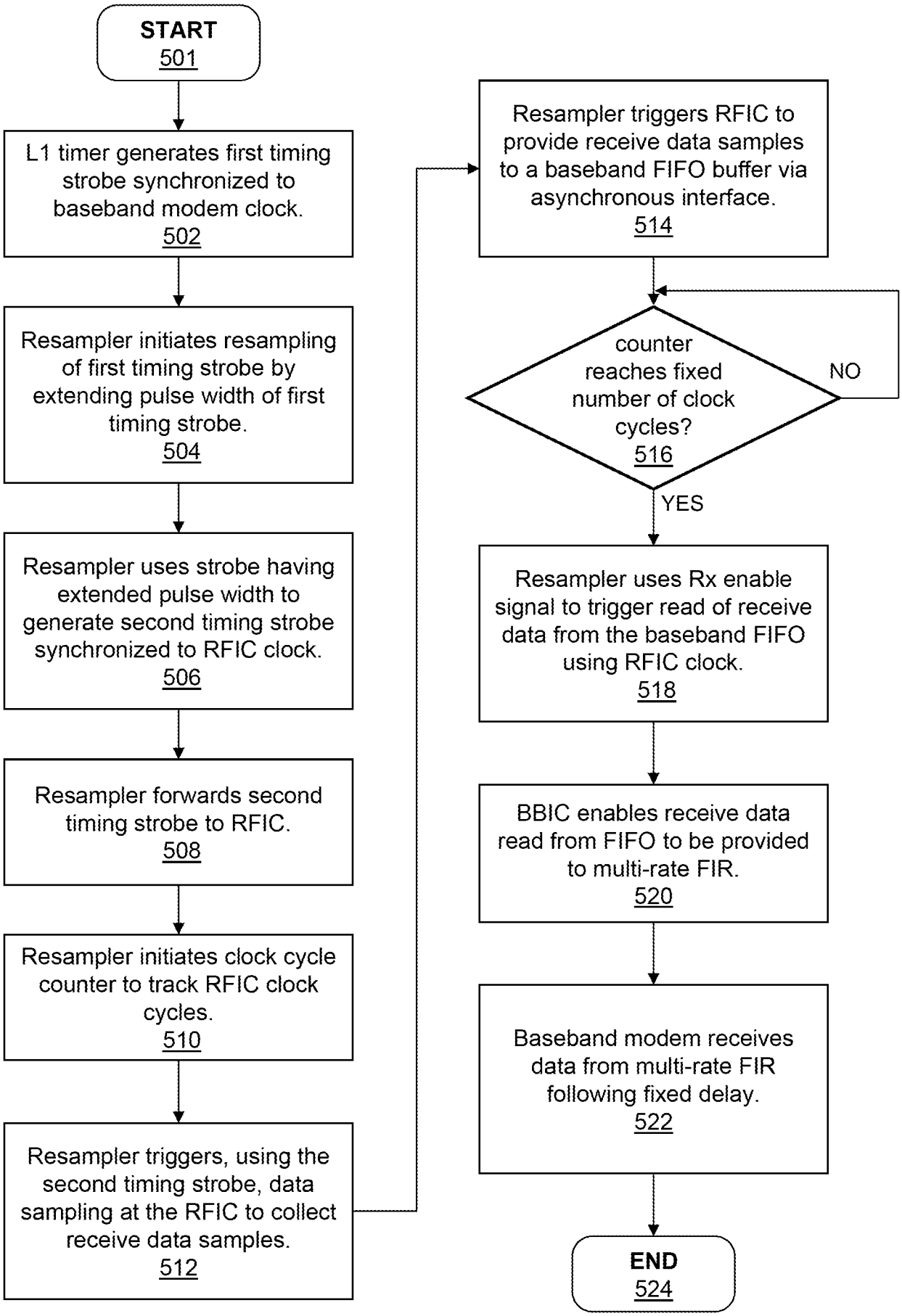
START
501
L1 timer generates first timing strobe synchronized to baseband modem clock.
502
Resampler initiates resampling of first timing strobe by extending pulse width of first timing strobe.
504
Resampler uses strobe having extended pulse width to generate second timing strobe synchronized to RFIC clock.
506
Resampler forwards second timing strobe to RFIC.
508
Resampler initiates clock cycle counter to track RFIC clock cycles.
510
Resampler triggers, using the second timing strobe, data sampling at the RFIC to collect receive data samples.
512
Resampler triggers RFIC to provide receive data samples to a baseband FIFO buffer via asynchronous interface.
514
counter reaches fixed number of clock cycles?
516
NO
YES
Resampler uses Rx enable signal to trigger read of receive data from the baseband FIFO using RFIC clock.
518
BBIC enables receive data read from FIFO to be provided to multi-rate FIR.
520
Baseband modem receives data from multi-rate FIR following fixed delay.
522
END
524

INTERNATIONAL SEARCH REPORT

International application No
PCT/US2013/067394

A. CLASSIFICATION OF SUBJECT MATTER
INV. H04B1/40 H04J3/06
ADD. H04L25/05 H04L7/00

According to International Patent Classification (IPC) or to both national classification and IPC

B. FIELDS SEARCHED

Minimum documentation searched (classification system followed by classification symbols)
H04J H04B H04L

Documentation searched other than minimum documentation to the extent that such documents are included in the fields searched

Electronic data base consulted during the international search (name of data base and, where practicable, search terms used)
EPO-Internal, WPI Data

C. DOCUMENTS CONSIDERED TO BE RELEVANT

Category*	Citation of document, with indication, where appropriate, of the relevant passages	Relevant to claim No.
A	US 7 948 964 B1 (KHLAT NADIM [FR] ET AL) 24 May 2011 (2011-05-24) column 4, line 17 - line 23 page 4, line 54 - page 5, line 15 column 6, line 60 - column 7, line 9 column 7, line 35 - line 43 column 7, line 51 - line 67 column 8, line 41 - column 9, line 34 column 10, line 49 - column 11, line 15 figures 2-5,7A-9C -----	1-20
A	EP 2 154 788 A2 (NXP BV [NL]) 17 February 2010 (2010-02-17) paragraph [0027] - paragraph [0037] paragraph [0046] - paragraph [0050]; figures 1-4 ----- -/--	1-20

[X] Further documents are listed in the continuation of Box C.

[X] See patent family annex.

* Special categories of cited documents :

"A" document defining the general state of the art which is not considered to be of particular relevance

"E" earlier application or patent but published on or after the international filing date

"L" document which may throw doubts on priority claim(s) or which is cited to establish the publication date of another citation or other special reason (as specified)

"O" document referring to an oral disclosure, use, exhibition or other means

"P" document published prior to the international filing date but later than the priority date claimed

"T" later document published after the international filing date or priority date and not in conflict with the application but cited to understand the principle or theory underlying the invention

"X" document of particular relevance; the claimed invention cannot be considered novel or cannot be considered to involve an inventive step when the document is taken alone

"Y" document of particular relevance; the claimed invention cannot be considered to involve an inventive step when the document is combined with one or more other such documents, such combination being obvious to a person skilled in the art

"&" document member of the same patent family

Date of the actual completion of the international search	Date of mailing of the international search report
15 January 2014	22/01/2014

Name and mailing address of the ISA/	Authorized officer
European Patent Office, P.B. 5818 Patentlaan 2 NL - 2280 HV Rijswijk Tel. (+31-70) 340-2040, Fax: (+31-70) 340-3016	Pieper, Thomas

4

Form PCT/ISA/210 (second sheet) (April 2005)

C(Continuation). DOCUMENTS CONSIDERED TO BE RELEVANT

Category*	Citation of document, with indication, where appropriate, of the relevant passages	Relevant to claim No.
A	US 2012/224518 A1 (PADMANABHAN UDAY [US] ET AL) 6 September 2012 (2012-09-06) paragraphs [0037], [0038] figures 3,4	1-20
A	AGILENT: "DigRF FAQ", AGILENT INTERNET PUBLICATION, 1 July 2007 (2007-07-01), pages 1-8, XP055096668, Retrieved from the Internet: URL:http://www.home.agilent.com/upload/cmc_upload/All/DigRF_FAQ_V1.pdf> [retrieved on 2014-01-14] paragraph [01.7] - paragraph [1.10]	1-20
A	FOGG A: "DigRF BASEBAND / RF DIGITAL INTERFACE SPECIFICATION", INTERNET CITATION, 20 February 2004 (2004-02-20), XP002325710, Retrieved from the Internet: URL:http://146.101.169.51/DigRF%20Standard%20v112.pdf [retrieved on 2004-02-20] page 3.1 paragraph [4.3.4]	1-20

INTERNATIONAL SEARCH REPORT

Information on patent family members

International application No
PCT/US2013/067394

Patent document cited in search report	Publication date	Patent family member(s)	Publication date
US 7948964 B1	24-05-2011	US 7948964 B1	24-05-2011
		US 8085754 B1	27-12-2011
EP 2154788 A2	17-02-2010	EP 2154788 A2	17-02-2010
		US 2010074311 A1	25-03-2010
US 2012224518 A1	06-09-2012	CN 102685873 A	19-09-2012
		JP 2012186804 A	27-09-2012
		US 2012224518 A1	06-09-2012