June 28, 1938. E. M. RIEGER ET AL 2,121,984

ADJUSTABLE DRAIN CONNECTION

Filed Oct. 10, 1936

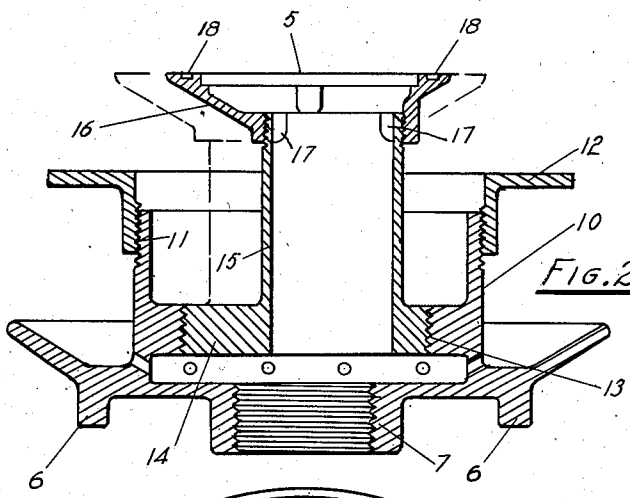

FIG. 2.

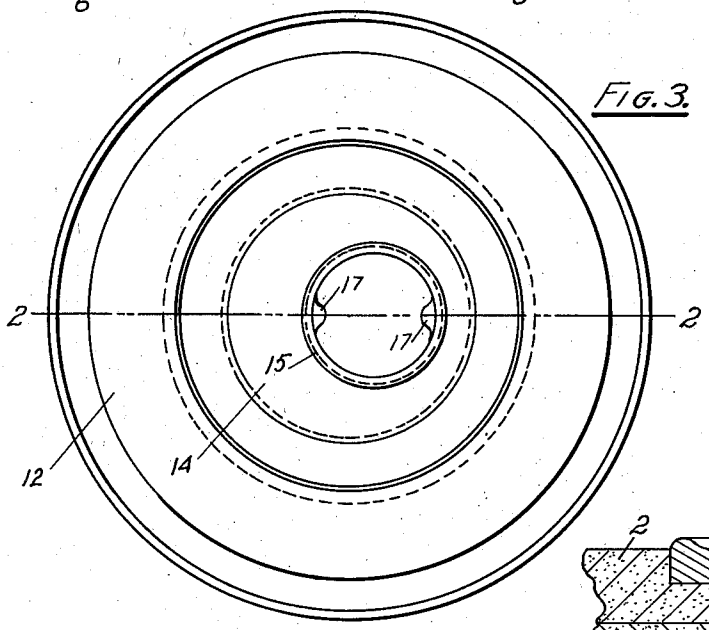

FIG. 3.

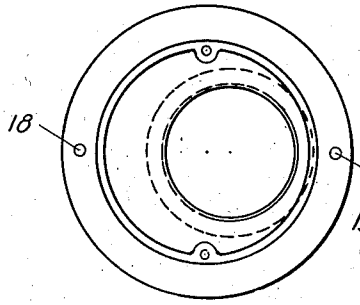

FIG. 4.

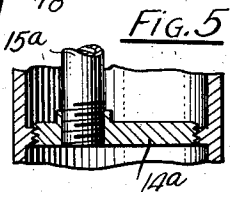

FIG. 5

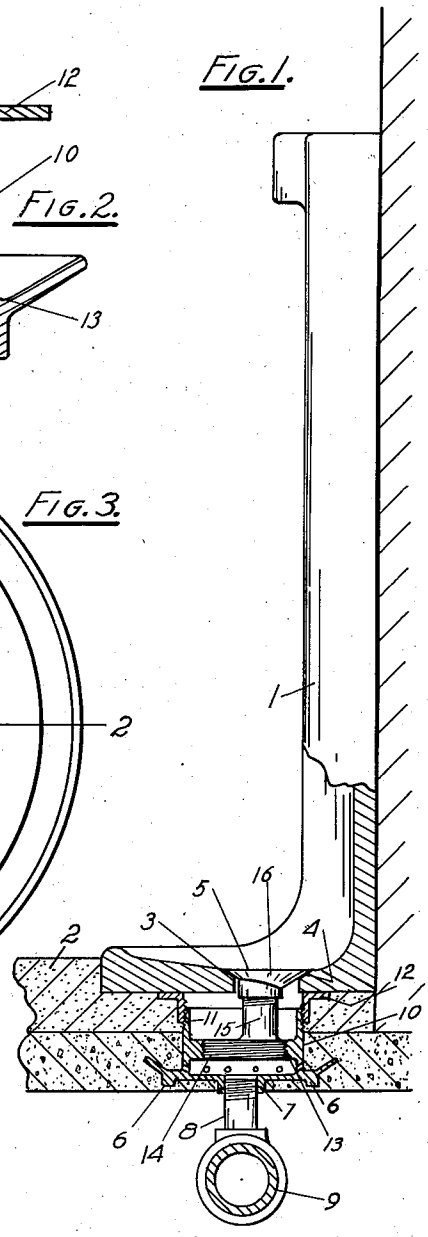

FIG. 1.

INVENTOR.
Edward M. Rieger
Melvin A. Zurn
BY Gloriann L. Miller
ATTORNEY.

Patented June 28, 1938 2,121,984

UNITED STATES PATENT OFFICE

2,121,984

ADJUSTABLE DRAIN CONNECTION

Edward M. Rieger and Melvin A. Zurn, Erie, Pa., assignors to J. A. Zurn Manufacturing Company, Erie, Pa., a corporation of Pennsylvania

Application October 10, 1936, Serial No. 105,074

3 Claims. (Cl. 285—33)

This invention relates generally to drains, and more particularly to adjustable drain connections.

All drains of this character made according to the prior art, and with which we are familiar, have been very difficult to install and very unsatisfactory after installation because the openings in the surfaces to be drained are not ordinarily in alignment with the fixed drain pipe. This difficulty is encountered particularly in urinals where a plurality of drains are connected to a main drain pipe, the upper portions of the drain connections fitting into openings in the bases of the urinals. All work in connecting the main drain pipe with the openings in the surfaces to be drained must be done after the surfaces are set in place thereby making the task of installation very difficult because many of the openings are off-set laterally with relation to the main drain pipe. Some manufacturers have tried to remedy this difficult problem by providing fillers, wedges, annular rings and the like but it was found impossible to work through the openings of the surface to be drained.

It is, accordingly, an object of this invention to overcome the above defects, and more particularly to provide a means for compensating for the off-set between the openings in a surface to be drained and a main drain pipe having multiple drain connections between said openings and said main drain pipe.

Another object of our invention is to provide an adjustable drain connection which has more than one point of adjustment.

Another object of our invention is to provide means for adjusting the drain connections between the main drain pipe and the openings in the surface to be drained.

Another object of our invention is to provide an adjustable drain connection between a main drain pipe and an opening in a surface to be drained which may be operated through the opening in the surface to be drained.

Another object of our invention is to provide an adjustable drain connection which also provides support for the surface to be drained.

Another object of our invention is to provide an adjustable drain connection which is simple in construction, cheap in cost, efficient in operation, and easy to install.

Other objects of our invention will become evident from the following detailed description, taken in conjunction with the accompanying drawing, in which

Fig. 1 is a side elevational view with parts broken away in section of a urinal with our novel adjustable drain connection installed.

Fig. 2 is a sectional view taken on the line 2—2 of Fig. 3 showing the limits of the adjustable movement of the strainer head by dash lines.

Fig. 3 is a plan view of our novel adjustable drain connection with the strainer head removed.

Fig. 4 is a plan view of the strainer head.

Fig. 5 is a fragmentary sectional view showing a threaded connection between the connecting portion and the eccentric plate.

Referring to the drawing, Fig. 1 shows a urinal 1 embedded at its base in a cementitious material 2 and having an opening 3 with tapered sides 4 for receiving the strainer head 5. It will be apparent that although we have shown and described our adjustable drain connection in connection with urinals, they may be used in and with any surface to be drained such as shower baths or any other use where drains are required, especially where a multiplicity of drains are connected to a main drain pipe.

Coming now to the gist of the present invention, a base plate 6 is shown embedded in the cementitious material 2, the base plate 6 having a centrally located threaded opening 7 for threadably engaging the threaded pipe 8 leading to the main drain pipe 9. An annular member 10 extends upwardly from the base plate 6 and is integral therewith although it will be evident that the member 10 may be connected to the base plate 6 by any suitable means. A threaded portion 11 is provided on the upper end of the annular member 10 for engagement with a threaded collar 12 which supports the heavy weight of the urinal. An inwardly projecting threaded portion 13 threadably engages a threaded circular plate 14 which is disposed eccentrically with relation to a cylindrical connecting portion 15. Fig. 5 shows a modified construction in which the connecting portion 15a is threadably engaged to the circular plate 14a. The strainer head 5 threadably engages the upper end of the connecting portion 15 and with its tapered seating portion 16 is eccentrically disposed with relation to the axis of the connecting portion 15. Lugs 17 are provided on the connecting portion 15 and spanner wrench holes 18 on the strainer head 5 in order that the strainer head 5 and the connecting portion 15 with the circular plate 14 may be rotated independently from the opening in the surface to be drained.

In the installation of our novel adjustable drain

connection, the main drain pipe 9 and the base plate 6 with its upwardly extending annular member 10 is embedded in a fixed position. Ordinarily urinals and the like are disposed in units of more than one therefore requiring a plurality of drain connections to the main drain pipe. After the required number of connections to the main drain pipe are provided for, the threaded circular plates 14 with their cylindrical connecting portions 15 are engaged to the threaded projecting portions 13 and the urinals or any other surface to be drained are set in place carried by the collars 12 on the annular members 10. Since the positions of the openings 3 in the urinals 1 vary somewhat because of the processes in their manufacture, many of the openings 3 are off-set considerably from the connections leading from the fixed drain pipe 9. The strainer heads 5 are then engaged to the upper end of the connecting portions 15 and moved to a seating position with relation to the tapered sides 4 in the openings 3. Since both the strainer heads 5 with their seating surfaces 16 and the circular plates 14 are eccentric to the connecting portions 15 and are adapted to move independent of each other, they may both be rotated, one through the lugs 17 and the strainer head 5 through the holes 18, until the seating surface 16 of the strainer head 5 seats perfectly on the tapered sides 4 in the openings 3. Any form of material may be used to form a seal between the seating portions 16 of the strainer heads 5 and the tapered sides 4 of the openings 3. Although the description of the installation refers to a multiple drain connection where a plurality of drain connections are required, it is evident that it will apply to a single drain connection.

It will be apparent that we have provided an adjustable drain connection which may be operated from an opening in the surface to be drained, which is simple and durable, which provides support for the surface to be drained, and which compensates for any off-set between the main drain pipe and the openings in the surface to be drained.

Various changes may be made in the specific embodiment of the present invention without departing from the spirit thereof, or from the appended claims.

What we claim is:

1. In an adjustable drain connection, in combination, a base member having an internally threaded circular flange portion, an extended adjusting nipple having a threaded eccentrically disposed flange on one end thereof in engagement with the threaded portion of said base member, and a strainer head having an eccentrically disposed opening in engagement with the other end of said nipple.

2. A claim as claimed in claim 1 wherein an adjustable support is disposed on said base member.

3. In an adjustable drain connection, in combination, a base member, an internally threaded circular flange portion disposed on said base member, an extended adjusting nipple having a threaded relatively movable eccentrically disposed flange on one end thereof in engagement with the threaded portion of said circular flange portion, and a strainer head having an eccentrically disposed opening in engagement with the other end of said nipple.

EDWARD M. RIEGER.
MELVIN A. ZURN.