(19) Octrooicentrum Nederland

(11) **2022877**

(12) B1 **OCTROOI**

(21) Aanvraagnummer: **2022877**

(51) Int. Cl.:
B66C 13/02 (2020.01) **B66C 23/52** (2020.01)

(22) Aanvraag ingediend: **5 april 2019**

(30) Voorrang:

(41) Aanvraag ingeschreven:
12 oktober 2020

(43) Aanvraag gepubliceerd:
-

(47) Octrooi verleend:
12 oktober 2020

(45) Octrooischrift uitgegeven:
29 oktober 2020

(73) Octrooihouder(s):
Itrec B.V. te SCHIEDAM

(72) Uitvinder(s):
Cornelis Martinus van Veluw te SCHIEDAM
Wing Sum Lee te SCHIEDAM
Ken van Oijen te SCHIEDAM

(74) Gemachtigde:
ir. J.C. Volmer c.s. te Rijswijk

(54) **heave compensated dual hoist crane**

(57) The invention relates to a dual hoist crane provided with a heave compensation system that can be used for both the main and for the auxiliary hoisting assembly. The heave compensation system comprises a first set of sheaves for guiding the main hoisting cable and a second set of sheaves for guiding the auxiliary hoisting cable. The heave compensation system is configured to individually lock the first set of sheaves and the second set of sheaves to a heave compensation cylinder, for respectively providing the main hoisting assembly and the auxiliary hoisting assembly with heave compensation.

NL B1 2022877

Dit octrooi is verleend ongeacht het bijgevoegde resultaat van het onderzoek naar de stand van de techniek en schriftelijke opinie. Het octrooischrift komt overeen met de oorspronkelijk ingediende stukken.

P34024NL00/MHR

Title: heave compensated dual hoist crane

This invention relates to a dual hoist crane provided with a heave compensation device.

Dual hoist cranes, the crane comprising a main hoisting assembly and an auxiliary hoisting assembly, are generally known. Typically, the crane comprises a boom, supporting the main hoisting cable at its' top end, which boom is provided at that top end with a jib for supporting an auxiliary hoisting cable. Providing the boom with a jib enhances the reach of the crane. For example, a dual hoist crane is disclosed in US840684.

It is known to provide an offshore crane with a heave compensation system. Such a crane is for example disclosed in US9290362. If a dual hoist crane is provided with a heave motion compensation system, heave compensation is often only provided for the main hoisting assembly. In those cases where both the main and auxiliary hoisting assembly are provided with heave compensation, typically each hoisting assembly is provided its own, dedicated heave compensation system.

Providing a crane with two heave compensation systems increases the production costs of the crane. Furthermore, the heave compensation systems are voluminous, and thus require space in the crane or on the vessel.

A dual hoist crane, in the form of a multi purpose tower, comprising a heave compensation system is for example known from WO2011034422. The dual hoist crane comprises a main hoisting assembly, provided with a heave compensation system associated with the main hoisting cable, and a deep water hoisting assembly. A releasable attachment mechanism, designed for interconnecting the main hoisting cable and the deepwater hoisting cable, is provided. Thus, the heave compensation system associated with the main hoisting cable is operable in combination with the deepwater hoisting cable.

The releasable attachment mechanism located on the travelling pulley block of the main hoisting assembly, and is configured to engage the deepwater hoisting cable such that the deepwater hoisting cable and the main hoisting cable are interconnected. Subsequently the main hoisting assembly is used to support the weight of the deepwater hoisting cable and the object supported by the deepwater cable. When the load of the deepwater cable and the object are supported by the main hoisting assembly, the heave compensation system is able

to provide heave compensation, i.e. to dampen the effect of the movement of the vessel onto an object supported by the main hoisting cable.

It is submitted that, because the main hoisting cable has to be connected with the deep water cable, the free hanging section of the main hoisting cable and the free hanging section deep water cable have to be in, or have to be brought into, the vicinity of each other. This requires a specific set up of the crane.

Furthermore, sharing the heave compensation system requires a releasable attachment mechanism configured to directly engage a cable in such a manner that loads can be transferred to that cable. Such a releasable attachment mechanism may be complicated and voluminous, and has to be moveably supported to enable the heave compensation to be provided. Also, once the cables are interconnected, the deep water winch and the has to follow the main hoisting winch, to keep the cables parallel and prevent slack and increased tension in the deep water cable. Also, the heave compensation can only be provided within the range of the main hoisting cable, or along the trajectory of the releasable attachment mechanism.

It is an general object of the invention to provide an alternative dual hoist crane with a heave compensation system for both a main hoisting assembly and an auxiliary hoisting assembly of the dual hoist crane.

It is a further object of a first aspect of the invention to provide a dual hoist crane in which the above mentioned drawbacks are eliminated altogether or occur in a greatly reduced extent.

It is a further object of the invention to provide an alternative heave compensation system, more in particular an improved heave compensation system, configured to provide heave compensation for both a main hoisting assembly and an auxiliary hoisting assembly.

According to the present invention, one or more of the above mentioned objects are achieved by designing a dual hoist crane acceding to claim 1.

A dual hoist crane according to the claimed invention comprises a dual hoist heave compensation system that is configured to be used with the main hoisting assembly and with the auxiliary hoisting assembly.

The dual hoist heave motion compensation system comprises a heave compensation cylinder, a first set of sheaves, associated with the main hoisting cable, and a second set of sheaves associated with the auxiliary hoisting cable. The dual hoist heave motion compensation system is configured to be coupled with the first set of sheaves to provide the main hosting assembly with heave compensation and with the second set of sheaves to provide the auxiliary hoisting assembly with heave compensation.

Thus, the invention provides a dual hoist crane with an alternative heave compensation system, to provide a dual hoist crane with heave compensation for both a main hoisting assembly and an auxiliary hoisting assembly of the dual hoist crane.

Because the dual hoist heave compensation system according to the invention can be used with both the main hoisting assembly and with the auxiliary hoisting assembly, it is no longer necessary to provide each hoisting assembly with a dedicated heave compensation system. Also, there is no need for a releasable attachment mechanism for interconnecting the main hoisting cable with the auxiliary hoisting cable. Thus the invention allows for a more compact and/or low cost configuration of the dual hoist crane, more in particular for the heave compensation system of the dual hoist crane.

Also, the dual hoist heave compensation system does not require the free hanging section of the main hoisting cable and the free hanging section auxiliary hoisting cable to be in, or have to be brought into, the vicinity of each other. This allows for the dual hoist heave compensation system to be used with many crane set ups.

A dual hoist crane according to the claimed invention comprises:

- a crane structure;
- a boom, the boom having an inner end, a mid section and an outer end, which boom is pivotable supported by the crane structure such that it can be pivoted about a substantially horizontal boom axis;
- a main hoisting assembly, for lifting and lowering a load, the main hoisting assembly comprising a main hoisting winch and an associated main hoisting cable, and a main hoisting load suspension device;
- an auxiliary hoisting assembly for lifting and lowering a load, the auxiliary hoisting assembly comprising an auxiliary hoisting winch and an associated auxiliary hoisting cable, and a auxiliary load suspension device;
- a dual hoist heave motion compensation system, the heave motion compensation system comprising:

- a support frame;

- a heave compensation cylinder, having a cylinder body mounted on the support frame and a cylinder rod, which heave compensation cylinder is connected to a gas buffer to enable passive heave compensation;

- a sheave head, wherein the sheave head is supported by the cylinder rod for movement along a heave compensation trajectory;

- a sheave dock, mounted on the support frame at an end of the heave compensation trajectory;

- a first set of sheaves guiding the main hoisting cable of the main hoisting system;

- a second set of sheaves guiding the auxiliary hoisting cable of the auxiliary hoisting assembly;

wherein the main hoisting cable extends from the main hoisting winch along the heave compensation trajectory, via the first set of sheaves, and via at least one main hoisting sheave at the outer end of the boom to the main load suspension device,

wherein the auxiliary hoisting cable extends from the auxiliary hoisting winch along the heave compensation trajectory, via the second set of sheaves, and via at least one auxiliary hoisting sheave at the outer end of the boom, preferably at an outer end of a jib, to the auxiliary load suspension device, and

wherein the dual hoist heave motion compensation system is configured to individually lock the first set of sheaves and the second set of sheaves to the sheave head, for respectively providing the main hoisting assembly and the auxiliary hoisting assembly with heave compensation, and to individually lock the first set of sheaves and the second set of sheaves to the sheave dock, for respectively not providing the main hoisting assembly and the auxiliary hoisting assembly with heave compensation, and the dual hoist heave motion compensation system thus enables for providing only the main hoisting assembly with heave compensation and for providing only the auxiliary hoisting assembly with heave compensation.

According to the claimed invention, the hoisting assemblies are configured such that the main hoisting cable and the auxiliary hoisting cable run along the heave compensation trajectory of the heave compensation assembly, and are both guided via sheaves of the heave compensation assembly. Furthermore, the heave compensation cylinder is configured to be switched between use with the sheaves guiding the main hoisting cable and use with the sheaves guiding the auxiliary hoisting cable. Thus the invention provides an efficient way to share the functionality of the heave compensation cylinder between the main hoisting assembly and the auxiliary hoisting assembly.

It is submitted that the heave compensation system according to the invention may comprise a single heave compensation cylinder or may comprise a combination of multiple heave compensation cylinders.

The heave compensation cylinder or heave compensation cylinders are coupled to a gas buffer. The gas buffer may be part of the heave compensation system, or may be a separated component. Preferably, the gas buffer is mounted in the vicinity of the heave compensation system, for example is mounted on the heave compensation cylinder and/or to the support frame of the heave compensation system.

In an embodiment, the sheaves of the first set of sheaves and the sheaves of the second set of sheaves are configured to be locked to the sheave head, for example to be bolted to the sheave head, or to be locked to the sheave dock, for example to be bolted to the sheave dock.

For example, the sheave may each comprise a sheave holder provided with locking means, for example apertures for receiving a securing rod, or the sheave holders may be configured to be bolted to the sheave head and to the sheave dock. Mounting the sheaves individually the sheave head and the sheave dock allows for a compact configuration of the heave compensation system.

In an embodiment, each sheave is provided with a sheave holder, which sheave holder comprises a sheave holder body in which the sheave is rotatable mounted, and a sheave head couple section and a sheave dock couple section, on opposite sides of the sheave holder body, for engaging and coupling with the sheave head and the sheave dock respectively.

In a further preferred embodiment, the sheave head couple section and/or the sheave dock couple section are beaks configured for engaging a beam like sheave head and a beam like sheave dock. Preferably, the beaks are shaped, e.g. narrow in a direction towards the sheave, for guiding the sheave holder in a correct locking positon relative to the sheave head and sheave dock.

In a preferred embodiment, the sheave holder is provided with locking means, configured to cooperate with locking means provided on the sheave head and the sheave dock, for locking the sheave holder, and thus the sheave held by the sheave holder, in a locking position relative to the sheave head and the sheave dock.

In an alternative embodiment, the sheaves of the first set and the sheaves first of the second set are mounted in a first sheave block and a second sheave block respectively, and wherein the first sheave block and the second sheave block are configured to be mounted to the sheave head and to be mounted to the sheave dock, to lock the sheaves to the sheave head and to lock the sheaves to the sheave dock respectively.

In such an embodiment, the sheaves of a single set can be locked all at once to the sheave head or the sheave dock. This facilitates the locking process. It is submitted that the it is also possible to mount the sheaves of a set in multiple sheave blocks, for example to mount six sheaves in two sheave blocks, each sheave block comprising three sheaves.

In a further embodiment, the dual hoist crane further comprises locking devices for locking the sheaves, or the sheave blocks in which the sheaves are mounted, to the sheave head and the sheave dock, wherein the locking means preferably comprise one or more locking pins moveable between a locked position into a locking hole and an unlocked position.

In an embodiment, the locking means comprise one or more actuators, for example hydraulic cylinders or electric spindles, for semi automatically locking the sheaves, or sheave blocks, to the sheave sheave head or the sheave dock.

The sheaves or sheave blocks are in a locking positon, when locked to the sheave dock. It is submitted that the heave compensation trajectory preferably ends prior to this locking positions. Thus, the sheaves supported by the sheave head are not moved into the locking position when they are moved by the heave compensation cylinder during heave compensation.

Preferably, the heave compensation cylinder is configured to move the sheave head along the heave compensation trajectory. Preferably, the cylinder is configured to extend beyond the heave compensation trajectory to position the sheaves locked to the sheave head in a locking position, in which locking position the sheaves can be locked to the sheave dock, and in which locking position the sheaves locked to the sheave dock can be locked to the sheave head.

In addition, or as an alternative, the sheave dock may be moveably supported, such that the sheave dock can be moved towards the sheave head, when the heave compensation is in an

extended position, to position sheaves in a locking positon in which they can be locked to both the sheave head and the sheave dock.

In an alternative embodiment, the heave compensation assembly comprises a sheave transfer device, which sheave transfer device is configured to transfer the sheaves between a locking position relative to the sheave head, for locking the sheaves to the sheave head, and a locking position relative to the sheave dock, for locking the sheaves to the sheave dock. Such a sheave transfer device may comprise a trolley to which the sheaves can be mounted, which trolley can be moved, for example by way of cables and a winch or by way of hydraulic cylinders, along a trolley track to move the sheaves between the respective locking positions.

Furthermore, sheaves, sheave blocks, and the sheave head and sheave dock are preferably provided with cooperating guide means, for guiding the sheaves or sheave blocks into the correct locking position

It is submitted that the heave compensation system according to the claimed invention preferably is mounted in the crane, for example in the crane structure, or, if present mounted to a gantry or to a boom of the crane.

As an alternative, the heave compensation system can be located below the crane structure, for example in a pedestal of the crane, or within the hull of the vessel. In such an embodiment, the hoisting cables of the main hoisting assembly and the auxiliary hoisting assembly are guided via sheaves form the crane to the heave compensation system and back to the crane.

In an embodiment, the dual hoist crane further comprises a slew bearing arranged for pivoting the crane structure about a vertical crane pivot axis.

In an embodiment, the dual hoist crane according to the invention is a mast crane or a pedestal mounted crane.

In an embodiment, the dual hoist crane comprises a luffing assembly for pivoting the boom up and down, the luffing assembly comprising:

- a luffing winch and an associated luffing cable; and
- a gantry, the gantry supporting a luffing cable sheave for guiding the luffing cable from the luffing winch to the outer end of the boom.

In a further embodiment, the gantry comprises a back stay and a back frame, which back stay and back frame are both at a lower end pivotably mounted to the crane structure, for pivoting about a substantially horizontal back stay pivot axis and back frame pivot axis respectively, and are both at an upper end pivotably connected to each other,
wherein the back frame is located between the back stay and the boom, and
wherein the backstay comprises a lower frame section and an upper frame section, which lower frame section and upper frame section are pivotably connected, and
wherein the gantry can be lowered by pivoting the lower frame section relative to the upper frame section.

By providing the dual hoist crane with such a gantry, the overall height of the crane, in particular the gantry of the crane, can be reduced, which enables passing bridges. Such a gantry frame is in particular beneficial by large sized boom cranes because for this type of cranes a gantry is extra usefull in supporting the boom and luffing cables, but at the same time has as a drawback that it increases the size of the crane which reduces bridge passing capacity of the vessel on which the crane is mounted.

In yet a further embodiment, the support frame of the heave motion compensation system is mounted in the backstay of the gantry, preferably is mounted in the upper frame section of the back stay, preferably the support frame is an integral part of the back stay.

Providing the dual hoist heave motion compensation system in the gantry, instead of for example a pedestal of the crane or below the crane in the vessel, allows for utilising the frame of the back stay as the dual hoist heave compensation system frame. this allows for a compact and efficient configuration of the dael hoist heave compensation system.

In a further embodiment, the luffing winch is mounted to the crane structure, e.g. is mounted to the gantry, near the back frame pivot axis. This is in particular beneficial when the gantry is configured to be folded into a lowered position, as will be set out below.

In a further embodiment, the luffing assembly comprises a luffing cable guide arm, supporting the at least one luffing cable sheave, which guide arm preferably is pivotably mounted to the back frame, the guide arm comprising the at least one boom side sheave, which luffing cable sheave and boom side sheave are spaced relative to each other, for guiding the luffing cable to the boom and spacing part of the luffing cable at a distance form the back stay.

Providing such a luffing cable guide arm prevents the luffing cable to be supported too close to the frame of the gantry, and provide an improved angle for the luffing cables for luffing the boom out of its lowered position, and thus facilitates the luffing process.

In an embodiment, the dual hoist crane further comprise a tugging track, which tugging track is mounted to the boom and extends along the boom, for guiding a tug-trolley along the length of the boom, which tug trolley is configured to support cables, e.g. is provided with one or more winches, to be linked to a load supported by the main or auxiliary hoisting assembly, to reduce swing of said load, and preferably position the load relative to the boom.

The tugging track mounted tug trolley allows for providing additional support for a load hoisted by the dual hoist crane, in particular allows for reduced, or even prevents, swing of the load supported by the crane. In the prior art, tugging cables are used that originate from tugging installations mounted on the deck of the vessel. These tugging cables need to be longer than tugging cables originating from a winch mounted on the tugging trolley that is supported on the boom. The comparatively short tugging cables improve control over the load supported by the crane. Furthermore, the tugging track allows for optimal positioning of the tug trolley relative to the load supported by the crane. Depending on the load and the conditions, the tugging trolley can be positioned above, below, or level with the load supported by the hoisting cable of the crane.

Furthermore, the tugging track enables the tugging trolley to move along the boom while the load is raised or lowered, thus maintaining the optimal position during the lowering and/or lifting of the load.

In an embodiment, the boom is provided with a jib, wherein the jib is mounted at an outer end of the boom, and wherein the main hoisting cable is supported at the outer end of the boom and the auxiliary hoisting cable is supported at the outer end of the jib. It is submitted that by supporting the auxiliary hoisting cable by a jib, the reach of the crane is increased, without the need for a longer, and thus heavy, boom.

In an embodiment, the number of sheaves of one set, e.g. the first set, is even, and wherein the sheaves of that set are divided into two subsets, each subset comprising the same number of sheaves, and each sub set having a sheave head locking positon and a sheave dock locking position, in which they are locked to the sheave head and to the sheave dock respectively, wherein the locking positions of the sub sets are spaced relative to each other,

wherein the sheaves of the other set, e.g. the second set, have a sheave head locking positon and a sheave dock locking position, in which they are locked to the sheave head and to the sheave dock respectively, and
wherein the sheave head locking position and the sheave dock locking position of the other set are located between the sheave head locking position and the sheave dock locking position of the sub sets.

This configuration allows for an even load distribution, independent on which of the sets is locked to the heave compensation cylinder, or heave compensation cylinders, supporting the sheaves during heave compensation.

It is submitted that the heave compensation cylinder, in particular in its extend position, is susceptible to load forces that are not in line with the working axis of the cylinder. Typically, a cylinder of a robust design is used to compensate for suboptimal loading. The above disclosed configuration allows for less robust, thus compacter and lighter, heave compensation cylinders.

Preferably, the sheave head locking position and the sheave dock locking position of the other set, in the above example the second set, are located on a central axis of the heave compensation cylinders, or on a combined central axis of multiple heave compensation cylinders. In such an embodiment, the sheave head locking position and the sheave dock locking position of the sub sets are located on opposite sides of that central axis.

The invention furthermore provides a dual hoist heave compensation system for use in a dual hoist crane according to one or more of the preceding claims.

It is submitted that a dual hoist heave compensation system according to the claimed invention can also be used in other types of cranes, i.e. in cranes without a boom. For example, in an embodiment, the dual hoist heave compensation system according to the invention is provided in a multi purpose tower. In such an embodiment, sections of the main hoist assembly cable and the auxiliary hoist assembly cable run parallel and adjacent the outside of the tower. Furthermore, in such an embodiment, the heave compensation system is preferably provided inside the tower, or in the vessel below the tower, such that it is sheltered from the environment.

The invention furthermore provides a vessel provided with a dual hoist crane according to the invention.

The invention furthermore provides a method for hoisting a load using a dual hoist crane according to the invention, the method comprising the steps:
locking the first set of sheaves to the sheave head and locking the second set of sheave to the sheaves dock, and
hoisting a load with the main hoisting assembly while providing the main hoisting cable with heave motion compensation using the heave motion compensation system,
and/or
locking the second set of sheaves to the sheave head and locking the first set of sheave to the sheaves dock, and
hoisting a load with the auxiliary hoisting assembly while providing the auxiliary hoisting cable with heave motion compensation using the heave motion compensation system.

The invention furthermore provides a method for lowering a gantry of a dual hoist crane, the gantry comprising a back stay with a lower frame part hingeably connected to an upper frame part, the method comprising the steps:
- lowering the boom in a rest position;
- set a hoisting cable, e.g. the auxiliary hoisting cable, under constant tension, for example by using the heave compensation system or the associated hoisting winch, to thus load the back stay of the gantry;
- initiate hinging of the lower frame part of the back stay relative to the upper frame part of the back stay, for example by using an actuator, e.g. a hydraulic cylinder, or a tugging cable;
- pay out the luffing cable to lower the gantry, preferably while keeping constant tension in the hoisting cable, until the gantry is in its lowered position.

By lowering the gantry, the height of the vessel on which the crane is mounted can be reduced, and thus the vessel can pass below lower bridges. It is submitted that the gantry, and the method for lowering that gantry, disclosed herein, can also be used with other cranes, i.e. with single hoist cranes and/or with cranes comprising alternative or no heave compensation systems.

According to a second aspect, the invention furthermore provides a crane with a boom, a luffing installation, and a gantry, wherein the gantry is configured to be lowered by folding part of the gantry frame, more in particular by folding the back stay of the gantry. Thus, the overall height of the crane, in particular the gantry of the crane, can be reduced, which enables passing bridges. Such a gantry is in particular beneficial by large sized boom cranes because for this type of cranes a gantry is extra usefull in supporting the boom and luffing cables, but

at the same time has as a drawback that it increases the size of the crane which reduces bridge passing capacity of the vessel on which the crane is mounted.

A crane according to the second aspect of the invention comprises

- a crane structure;
- a boom, the boom having an inner end, a mid section and an outer end, which boom is pivotable supported by the crane structure such that it can be pivoted about a substantially horizontal boom axis;
a luffing assembly for pivoting the boom up and down, the luffing assembly comprising:
- a luffing winch and an associated luffing cable; and
- a gantry, the gantry supporting a luffing cable sheave for guiding the luffing cable from the luffing winch to the outer end of the boom;
- a main hoisting assembly, for lifting and lowering a load, the main hoisting assembly comprising a main hoisting winch and an associated main hoisting cable, and a main hoisting load suspension device;
wherein the gantry comprises a back stay and a back frame, which back stay and back frame are both at a lower end pivotably mounted to the crane structure, for pivoting about a substantially horizontal back stay pivot axis and back frame pivot axis respectively, and are both at an upper end pivotably connected to each other,
wherein the back frame is located between the back stay and the boom, and
wherein the backstay comprises a lower frame section and an upper frame section, which lower frame section and upper frame section are pivotably connected, and
wherein the gantry can be lowered by pivoting the lower frame section relative to the upper frame section.

In an embodiment, the gantry is provided with actuators for pivoting the lower frame section and the upper frame section of the backstay relative to each other, and thus for lowering and raising the gantry.

In a preferred embodiment, the gantry is provided with a heave compensation system according to the first aspect of the invention. In a further embodiment, the gantry is provided with the support frame of the heave motion compensation system, which support frame is mounted in the backstay of the gantry, preferably is mounted in the upper frame section of the back stay, preferably the support frame is an integral part of the back stay.

In an embodiment, the luffing winch is mounted to the crane structure, e.g. is mounted to the gantry, near the back frame pivot axis.

In an embodiment, the luffing assembly comprises a luffing cable guide arm supporting the at least one luffing cable sheave, which guide arm preferably pivotably mounted to the back frame, the guide arm comprising the at least one boom side sheave, which luffing cable sheave and boom side sheave are spaced relative to each other, for guiding the luffing cable to the boom and spacing part of the luffing cable at a distance form the back stay.

Whilst primarily presented for illustrative purposes with reference to one or more of the figures, any of the technical features addressed below may be combined with any of the independent claims of this application either alone or in any other technically possible combination with one or more other technical features.

Advantageous embodiments of the dual hoist crane and the dual hoist heave motion compensation system according to the invention and the method according to the invention are disclosed in the sub claims and in the description, in which the invention is further illustrated and elucidated on the basis of a number of exemplary embodiments, of which some are shown in the schematic drawing. In the figures, components corresponding in terms or construction and/or function are provided with the same last two digits of the reference numbers.

In the drawings;

Figure 1 shows perspective three quarter frontal view of a dual hoist crane according to the claimed invention;

Figure 2 shows a perspective three quarter rear view of the dual hoist crane of figure 1;

Figure 3 shows an enlarged view of a section of the dual hoist crane of figure 1;

Figure 4 shows a further enlarged view of a section of the dual hoist crane of figure 1;

Figure 5 shows a side view of the dual hoist crane of figure 1 with a raised gantry;

Figure 6 shows a side view of the dual hoist crane of figure 1 with a lowered gantry;

Figure 7 shows a schematic drawing of a crane according to the invention, with a gantry in a raised position;

Figure 8 shows a schematic drawing of a crane according to the invention, with a gantry in an intermediate position;

Figure 9 shows a schematic drawing of a crane according to the invention, with a gantry in a lowered position;

Fig 10 shows a schematic drawing of a heave compensation system according to the invention in a first condition; and

Fig 11 shows a schematic drawing of a heave compensation system according to the invention in a second condition.

Figure 1 shows a perspective view of a dual hoist crane 1 according to the invention. The dual hoist crane 1 comprises a crane structure 2 and a boom 3.

The boom 3 has an inner end 4, a mid section 5, and an outer end 6. The boom 3 is pivotable supported by the crane structure 2 such that it can be pivoted about a substantially horizontal boom axis 7.

The dual hoist crane 1 further comprises a main hoisting assembly 8, for lifting and lowering a load, and an auxiliary hoisting assembly 12 for lifting and lowering a load.

The main hoisting assembly 8 comprises a main hoisting winch 9 and an associated main hoisting cable 10, and a main hoisting load suspension device 11.

The auxiliary hoisting assembly 12 comprises an auxiliary hoisting winch 13, an associated auxiliary hoisting cable 14, and an auxiliary load suspension device 15.
In the embodiment shown, the dual hoist crane further comprises a luffing assembly 32 for pivoting the boom 3 up and down. The luffing assembly comprises a luffing winch 33 and an associated luffing cable 34. The luffing assembly 32 further comprises a gantry 35. The gantry supports a luffing cable sheave 36 for guiding the luffing cable 34 from the luffing winch 33 to the outer end 6 of the boom 3.

It is noted that the luffing cable 34 is looped multiple times between the outer end 6 of the boom 3 and the gantry 35, to thus enable the luffing cable 34 to support the weight of the boom 3, and potentially the weight of a load supported by the dual hoist crane 1.

Furthermore, in the embodiment shown, the boom 3 is provided with a jib 46, mounted at the outer end 6 of the boom 3. The main hoisting cable 10 is supported at the outer end of the boom 3 and the auxiliary hoisting cable 14 is supported at an outer end of the jib 46.

According to the claimed invention, the dual hoist crane 1 further comprises a dual hoist heave motion compensation system 16. The heave motion compensation system 16 comprises a support frame 17, two heave compensation cylinders 18, which heave compensation cylinders are each provided with a sheave head 22, a sheave dock 24, a first set of sheaves 25 and a second set of sheaves 26.

In the embodiment shown, the support frame 17 is part of a gantry 35 of the dual hoist crane 1. The support frame 17, more in particular the gantry 35, supports the two heave compensation cylinders 18.

Each of the heave compensation cylinders 18 has a cylinder body 19 and a cylinder rod 20. The heave compensation cylinders are mounted parallel in the support frame of the heave compensation assembly, in the embodiment shown are mounted in the gantry of the dual hoist crane. Furthermore, both cylinders 18 are mounted with their cylinder bodies 19 at the top, the cylinders rods 20 extending in a downward direction.

The heave compensation cylinders are both connected to a gas buffer 21 to enable passive heave compensation. In the embodiment shown, the gas buffers are also mounted to the support frame 17, in the embodiment shown the gantry 35.

The sheave heads 22 are supported by the cylinder rods 20, for movement along a heave compensation trajectory 23. The heave compensation trajectory runs parallel to the heave compensation cylinders 18, between the lower end of the cylinder bodies 19 and the sheave dock 24.

According to the claimed invention, the sheave dock is mounted on the support frame of the heave compensation assembly, at an end of the heave compensation trajectory. In the embodiment shown, the gantry of the dual hoist crane forms the heave compensation frame. Thus, in the embodiment shown, the sheave dock 24 is a cross beam that is also part of the gantry 35.

The first set of sheaves 25 guides the main hoisting cable 10 of the main hoisting system 8, while the second set of sheaves 26 guides the auxiliary hoisting cable 14 of the auxiliary hoisting assembly 12.

The main hoisting cable 10 extends from the main hoisting winch 9 along the heave compensation trajectory 23, via the first set of sheaves 25, and via at least one main hoisting sheave 27 at the outer end 6 of the boom 3 to the main load suspension device 11.

The auxiliary hoisting cable 14 extends from the auxiliary hoisting winch 13 along the heave compensation trajectory 23, via the second set of sheaves 26, and via at least one auxiliary

hoisting sheave 28 at the outer end 6 of the boom 3, in the embodiment shown at an outer end of a jib 46, to the auxiliary load suspension device 15.

According to the claimed invention, the dual hoist heave motion compensation system 16 is configured to individually lock the first set of sheaves 25 and the second set of sheaves 26 to the sheave head 22, for respectively providing the main hoisting assembly 8 and the auxiliary hoisting assembly 12 with heave compensation, and

The dual hoist heave motion compensation system 16 is further configured to individually lock the first set of sheaves 25 and the second set of sheaves 26 to the sheave dock 24, for respectively not providing the main hoisting assembly 8 and the auxiliary hoisting assembly 12 with heave compensation.

The dual hoist heave motion compensation system 16 thus enables for providing only the main hoisting assembly 8 with heave compensation and for providing only the auxiliary hoisting assembly 12 with heave compensation.

In the embodiment shown, both the main hoisting cable 10 and the auxiliary hoisting cable 14 are looped multiple times around the heave compensation cylinders 18, and thus are looped multiple times along the heave compensation trajectory 23. Thus, the heave compensation cylinders 18 can provide heave compensation with a minimal stroke of the cylinder rods. This allows for a compact configuration of the heave compensation system.

Furthermore, in the embodiment shown, for each heave compensation cylinder, the second set of sheaves 26, guiding the auxiliary hoisting cable 14, is subdivided into two sub sets 47, which sub sets are provided on opposite sides of the first set of sheaves 25, guiding the main hosting cable 10.

The number of sheaves of second set 26 is even. The sheaves of that set are divided into two subsets 47, each subset comprising the same number of sheaves. Furthermore, each of the sub sets 47 has a sheave head locking positon 48 and a sheave dock locking position 49, in which they are locked to the sheave head 22 and to the sheave dock 24 respectively.

The sheaves of the first set 25 also have a sheave head locking positon 48 and a sheave dock locking position 49, in which they are locked to the sheave head 22 and to the sheave dock 24 respectively.

In figure 3 and figure 4, the sub sets 47 of the second set of sheaves 26 are in the sheave dock locking position 49, while the first set of sheaves 25 are in the sheave head locking position 48.

The locking positions of the sub sets 47 are spaced relative to each other. The sheave head locking position 48 and the sheave dock locking position 49 of the first set of sheaves 25 are located between the sheave head locking position 48 and the sheave dock locking position 49 of the sub sets 47.

In the embodiment shown, the sheaves of the first set of sheaves 25 and the sheaves of the second set of sheaves 26 are configured to be locked to the sheave head 22, more in particular are configured to be bolted to the sheave head, and to be locked to the sheave dock 24, more in particular are configured to be bolted to the sheave dock 24.

In an alternative embodiment, the sheaves of the first set and the sheaves first of the second set are mounted in a first sheave block and a second sheave block respectively, and wherein the first sheave block and the second sheave block are configured to be mounted to the sheave head and to be mounted to the sheave dock, to lock the sheaves to the sheave head and to lock the sheaves to the sheave dock respectively.

In the embodiment shown, the dual hoist crane therefore comprises locking devices for locking the sheaves, or alternatively the sheave blocks in which the sheaves are mounted, to the sheave head and the sheave dock. In the embodiment shown, the locking devices comprise the nuts and bolts for locking the sheaves to the sheave head and the sheave dock, and the apertures in the sheaves, more in particular the sheave holders, the sheave head and the sheave dock for receiving the bolts.

The dual hoist crane 1 depicted in figure 1 enables a method for hoisting a load according to the invention. The method comprising the steps:

locking the first set of sheaves 25 to the sheave head 22 and locking the second set of sheaves 26 to the sheave dock 24, as shown in figure 3 and figure 4, and

hoisting a load with the main hoisting assembly 8 while providing the main hoisting cable 10 with heave motion compensation using the heave motion compensation system 16,

and/or

locking the second set of sheaves 26 to the sheave head 22 and locking the first set 25 of sheaves to the sheaves dock 24, and

hoisting a load with the auxiliary hoisting assembly 12 while providing the auxiliary hoisting cable 14 with heave motion compensation using the heave motion compensation system 16.

In the embodiment shown, the dual hoist crane 1 comprises a tugging track 44. The which tugging track 44 is mounted to the boom 3 and extends along the boom, for guiding a tug-trolley 45 along the length of the boom 3. The tug trolley 45 is configured to support cables, e.g. is provided with winches, to be linked to a load supported by the main hoisting assembly 8 or the auxiliary hoisting assembly 12, to reduce swing of said load, and preferably position the load relative to the boom.

In the embodiment shown, the main hoisting winch 9 and the auxiliary hoisting winch 13 are fixed to the crane structure 2 at the back of the crane 1 and below the gantry 35. In the preferred embodiment shown, the main hoisting cable and the auxiliary hoisting cable extend from their respective winches to the top of the gantry 35, are looped multiple times in the heave compensation system, are guided via the top of the gantry to the base of the boom, and run along the boom to the far end of the boom and the jib.

In the preferred embodiment shown, the dual hoist crane 1 is mounted on a vessel 50.

Figures 7-9 show simplified schematic drawings of a dual hoist crane 101 comprising a luffing assembly 132 and a gantry 135. The figures depict subsequent steps in the lowering of the gantry, which process will be explained below.

The gantry 135 comprises a back stay 137 and a back frame 138, which back stay and back frame are both at a lower end pivotably mounted to the crane structure 102, for pivoting about a substantially horizontal back stay pivot axis 140 and back frame pivot axis 139 respectively, and are both at an upper end pivotably connected to each other. in the embodiment the back frame and the back stay are directly coupled to each other, in an alternative embodiment, they may be coupled via an intermediate body.

The back frame 138 is located between the back stay 137 and the boom 103. The backstay 137 comprises a lower frame section 141 and an upper frame section 142, which lower frame section and upper frame section are pivotably connected to each other. The gantry 135 can be lowered by pivoting the lower frame section relative to the upper frame section. The lowered position of the gantry 135 is depicted in figure 9.

In the embodiment shown, the luffing winch 133 is mounted to the gantry 135, near the back frame pivot axis 140.

In a preferred embodiment, the support frame of the heave motion compensation system is mounted in the backstay of the gantry, preferably is mounted in the upper frame section of the back stay, preferably the support frame is an integral part of the back stay.

To lower the height of the vessel, the gantry 135 can be lowered. The invention furthermore provides a method for lowering the gantry 135, said method comprising the steps set out below. It is submitted that the gantry, and the associated method, can be used with a dual hoist crane provided with a heave compensation system according to the invention, but can also be used with a single hoist crane, and/or with crane without the heave compensation system.

To lower the gantry, first, the boom is lowered into a rest position. This preferably also includes securing the load suspension device of the hoisting assembly, or hoisting assemblies, in a parking position adjacent the boom.

Subsequently, the hoisting cable 10 is set under constant tension. In the embodiment only a single hoisting assembly is depicted, but the crane can be provided with an auxiliary hoisting assembly as well. This can be done by using the heave compensation system, if present, or by using the associated hoisting winch 109. The hoisting winch is set under constant tension to thus load the back stay of the gantry. This step is depicted in figure 7, with an arrow 201 indicating the tensioning of the hoisting cable 110 .

Subsequently, Hinging of the lower frame part 141 of the back stay 137 relative to the upper frame part 142 of the back stay 137 is initiated. This is depicted in figure 8, arrow 202 indicating the initiated hinging. This initiating can be done by way of an actuator e.g. a hydraulic cylinder mounted in the back stay, or for example by pulling at the hinge point using a tugging cable.

Once the hinging of the back stay has been initiated, the gantry is prevent hinging into the lowered position by the luffing cable. Therefore, paying out the luffing cable, preferably while keeping constant tension in the hoisting cable, causes the gantry to be lowered in a controlled manner. Thus, by paying out the luffing cable the gantry is lowered into its lowered position, depicted in figure 9, in which arrow 202 indicates the pay out of the luffing cable.

The embodiment depicted in figures 7-9 also shows a schematic depiction of a luffing cable guide arm 143 , which guide arm 43 is also depicted, in more detail, in the figures 1-6, of the luffing assembly.

In an embodiment, the luffing assembly 132 comprises a luffing cable guide arm 143 supporting the at least one luffing cable sheave 136. The guide arm 143 is pivotably mounted to the gantry 135, preferably the back frame 138 of the gantry. The guide arm comprises at least one boom side sheave 151, which is paced, by the arm, relative to luffing cable sheave 136. The purpose of the luffing cable guide arm is to guide the luffing cable to the boom while spacing part of the luffing cable at a distance from the back stay. Thus, the angle between luffing cable and gantry is optimal for lifting the boom, and for pulling the gantry into a lifted position.

Figures 10 and 11 depict a schematic representation of an embodiment of a dual hoist heave compensation system 316 according to the invention. Figure 20 depicts the heave compensation system 316 configured for providing heave to the main hoisting assembly, while figure 11 depicts the heave compensation system 316 configured for providing heave to the auxiliary hoisting assembly.

Depicted are the heave compensation cylinder 318, comprising a cylinder body 319 and a cylinder rod 320, which cylinder is mounted in a support frame 317.

In the embodiment shown, a first set of sheaves 325, mounted in a first sheave block 329, guides a main hoisting cable 310. A second set of sheaves 326, guiding an auxiliary hoisting cable 314, comprises to sub sets 347, each mount in a second sheave block 330.

In figure 10, the first sheave block 329 is locked to the sheave dock 324, while the second sheave blocks 330 are locked to the sheave head 322 supported by the heave compensation cylinder 318. Thus, the heave compensation cylinder 318 allows the first set of sheaves 325 to move along the heave compensation trajectory 323, and thus provide the main hoisting assembly with heave compensation.

In figure 11, the first sheave block 329 is locked to the sheave head 322, while the second sheave blocks 330 are locked to the sheave block 324. Thus, the heave compensation cylinder 318 allows the second set of sheaves 326, more in particular the sub sets 347 of the second set of sheaves, to move along the heave compensation trajectory 323, and thus provide the auxiliary hoisting assembly with heave compensation.

reference signs

01 dual hoist crane

02 crane structure;

03 boom

04 inner end boom

05 mid section boom

06 outer end boom

07 horizontal boom axis;

08 main hoisting assembly

09 main hoisting winch

10 main hoisting cable

11 main load suspension device

12 auxiliary hoisting assembly

13 auxiliary hoisting winch

14 auxiliary hoisting cable

15 auxiliary load suspension device

16 dual hoist heave motion compensation system

17 support frame dual hoist heave motion compensation system

18 heave compensation cylinder

19 cylinder body heave compensation cylinder

20 cylinder rod heave compensation cylinder

21 gas buffer

22 sheave head

23 heave compensation trajectory;

24 sheave dock

25 first set of sheaves

26 second set of sheaves

27 main hoisting sheave

28 auxiliary hoisting sheave

29 first sheave block

30 second sheave block

31 locking devices for locking the sheaves or the sheave blocks

32 luffing assembly

33 luffing winch

34 luffing cable

35 gantry

36 luffing cable sheave

37 back stay gantry

38 back frame gantry

39 substantially horizontal back frame pivot axis

40 substantially horizontal back stay pivot axis

41 lower frame section back stay

42 upper frame section back stay

43 luffing cable guide arm

44 tugging track

45 tug-trolley

46 jib

47 subsets of sheaves

48 sheave head locking positon

49 sheave dock locking position

50 vessel

51 boom side luffing sheave

C O N C L U S I E S

1. Een duale hijskraan, omvattende:

- een kraanstructuur;
- een giek, waarbij de giek een binnenuiteinde, een middensectie en een buitenuiteinde heeft, welke giek zodanig scharnierbaar is ondersteund door de kraanstructuur dat deze scharnierbaar is om een in hoofdzaak horizontale giekas;
- een hoofdhijssamenstel, voor het heffen en neerlaten van een last, waarbij het hoofdhijssamenstel een hoofdhijslier en een bijbehorende hoofdhijskabel omvat, en een hoofdlastophanginrichting;
- een secundair hijssamenstel voor het heffen en neerlaten van een last, waarbij het secundaire hijssamenstel een secundaire hijslier en een bijbehorende secundaire hijskabel heeft, en een secundaire lastophanginrichting;

met het kenmerk, dat de duale hijskraan verder een duaal hijsdeiningscompensatiesysteem omvat, waarbij het deiningscompensatiesysteem omvat:

- een ondersteuningsframe;
- een deiningscompensatiecilinder, die een aan het ondersteuningsframe bevestigd cilinderlichaam heeft en een cilinderstang, welke deiningscompensatiecilinder is verbonden met een gasbuffer om passieve deiningscompensatie mogelijk te maken;
- een schijvenkop, waarbij de schijvenkop is ondersteund door de cilinderstang voor beweging langs een deiningscompensatietraject;
- een schijvendok, bevestigd op het ondersteuningsframe aan een uiteinde van het deiningscompensatietraject;
- een eerste schijvenset die de hoofdhijskabel van het hoofdhijssamenstel geleidt;
- een tweede schijvenset die de secundaire hijskabel van het secundaire hijssamenstel geleidt;

waarbij de hoofdhijskabel zich uitstrekt van de hoofdhijslier langs het hijscompensatietraject, via de eerste schijvenset, en via ten minste één hoofdhijsschijf aan het uiteinde van de giek naar de hoofdlastophanginrichting;

waarbij de secundaire hijskabel zich uitstrekt van de secundaire hijslier langs het deiningscompensatietraject, via de tweede schijvenset, en via ten minste één secundaire hijsschijf aan het uiteinde van de giek, bij voorkeur aan een buitenuiteinde van een jib, naar de secundaire lastophanginrichting, en

waarbij het duale hijsdeiningscompensatiesysteem is ingericht om de eerste schijvenset en de tweede schijvenset individueel aan de schijvenkop te vergrendelen, voor het van deiningscompensatie voorzien van respectievelijk het hoofdhijssamenstel en het secundaire hijssamenstel, en om de eerste schijvenset en de tweede schijvenset individueel aan het schijvendok te vergrendelen, voor het niet van deiningscompensatie voorzien van

respectievelijk het hoofdhijssamenstel en het secundaire hijssamenstel, en het duale hijsdeiningscompensatiesysteem het daarmee mogelijk maakt om uitsluitend het hoofdhijssamenstel van deiningscompensatie te voorzien en om uitsluitend het secundaire hijssamenstel van deiningscompensatie te voorzien.

2. Een duale hijskraan volgens conclusie 1, waarbij de schijven van de eerste schijvenset en de schijven van de tweede schijvenset zijn ingericht om aan de schijvenkop te worden vergrendeld, bijvoorbeeld om met bouten aan de schijvenkop te worden bevestigd, en om aan het schijvendok te worden vergrendeld, bijvoorbeeld om met bouten aan de schijvendok te worden bevestigd.

3. Een duale hijskraan volgens conclusie 1, waarbij de schijven van de eerste set en de schijven van de tweede set in respectievelijk een eerste schijvenblok en een tweede schijvenblok zijn bevestigd, en waarbij het eerste schijvenblok en het tweede schijvenblok zijn ingericht om aan de schijvenkop te worden bevestigd en om aan het schijvendok te worden bevestigd, om daarmee de schijven aan respectievelijk de schijvenkop en het schijvendok te vergrendelen.

4. Een duale hijskraan volgens één of meer van de voorgaande conclusies, waarbij de duale hijskraan verder vergrendelingstoestellen omvat om de schijven, of de schijvenblokken waarin de schijven zijn bevestigd, te vergrendelen aan de schijvenkop en het schijvendok, waarbij de vergrendelingstoestellen bij voorkeur één of meer vergrendelingspinnen omvatten die beweegbaar zijn tussen een vergrendelingspositie in een vergrendelingsgat en een ontgrendelingspositie.

5. Een duale hijskraan volgens één of meer van de voorgaande conclusies, waarbij de kraan een oploefsamenstel omvat voor het op en neer scharnieren van de giek, waarbij het oploefsamenstel omvat:

- een oploeflier en een bijbehorende oploefkabel; en
- een gantry, waarbij de gantry een oploefkabelschijf omvat voor het geleiden van de oploefkabel van de oploeflier naar het uiteinde van de giek.

6. Een duale hijskraan volgens conclusie 5, waarbij de gantry een achterverstaging en een achterframe omvat, welke achterverstaging en achterframe beide aan een onderuiteinde scharnierbaar aan de kraanstructuur zijn bevestigd, om respectievelijk te scharnieren om een in hoofdzaak horizontale achterverstagingscharnieras en achterframescharnieras, en beide aan een bovenuiteinde scharnierbaar aan elkaar zijn bevestigd,

waarbij het achterframe zich tussen de achterverstaging en de giek bevindt, en waarbij de achterverstaging een onderste framesectie en een bovenste framesectie omvat, welke onderste framesectie en bovenste framesectie scharnierbaar zijn verbonden, en waarbij de gantry kan worden neergelaten door scharnieren van de onderste framesectie ten opzichte van de bovenste framesectie.

7. Een duale hijskraan volgens conclusie 6, waarbij het ondersteuningsframe van het deiningscompensatiesysteem in de achterverstaging van de gantry is bevestigd, bij voorkeur in de bovenste framesectie van de achterverstaging is bevestigd, waarbij het ondersteuningsframe bij voorkeur een integraal onderdeel van de achterverstaging is.

8. Een duale hijskraan volgens conclusie 6 of conclusie 7, waarbij de oploeflier aan de kraanstructuur is bevestigd, bijv. aan de gantry is bevestigd, nabij de achterframescharnieras.

9. Een duale hijskraan volgens één of meer van de conclusies 5-8, waarbij het oploefsamenstel een oploefkabelgeleidingsarm omvat die de ten minste ene oploefkabelschijf ondersteunt, welke geleidingsarm bij voorkeur scharnierbaar aan het achterframe is bevestigd, waarbij de geleidingsarm de ten minste ene giekzijschijf omvat, welke oploefkabelschijf en giekzijschijf zich op afstand van elkaar bevinden, voor het geleiden van de oploefkabel naar de giek en het op een afstand van de achterverstaging houden van een gedeelte van de oploefkabel.

10. Een duale hijskraan volgens één of meer van de voorgaande conclusies, waarbij de duale hijskraan verder een tuggingsbaan omvat, welk tuggingsbaan aan de giek is bevestigd en zich langs de giek uitstrekt, voor het geleiden van een tugtrolley langs de lengte van de giek, welke tugtrolley is ingericht om kabels te ondersteunen, bijv. van lieren is voorzien, om aan een door het hoofd- of secundaire hijssamenstel gedragen last te worden gekoppeld, om slingering van deze last te reduceren, en de last bij voorkeur ten opzichte van de giek te positioneren.

11. Een duale hijskraan volgens één of meer van de voorgaande conclusies, waarbij de giek is voorzien van een jib, waarbij de jib aan het buitenuiteinde van de giek is bevestigd, en waarbij de hoofdhijskabel aan het buitenuiteinde van de giek is ondersteund en de secundaire hijskabel aan een buitenuiteinde van de jib is ondersteund.

12. Een duale hijskraan volgens één of meer van de voorgaande conclusies, waarbij het aantal schijven van één set, bijv. de eerste set, even is, en waarbij de schijven van die set in twee subsets zijn verdeeld, waarbij elke subset hetzelfde aantal schijven omvat, en elke

subset een schijvenkopvergrendelingspositie en een schijvendokvergrendelingspositie heeft, waarin deze zijn vergrendeld aan respectievelijk de schijvenkop en het schijvendok, waarbij de vergrendelingsposities van de subsets zich op afstand van elkaar bevinden,

waarbij de schijven van de andere set, bijv. de tweede set, een schijvenkopvergrendelingspositie en een schijvendokvergrendelingspositie hebben, waarin deze zijn vergrendeld aan respectievelijk de schijvenkop en de schijvendok, en

waarbij de schijvenkopvergrendelingspositie en de schijvendokvergrendelingspositie van de andere set zich tussen de schijvenkopvergrendelingspositie en de schijvendokvergrendelingspositie van de subsets bevinden.

13. Een duaal hijsdeiningscompensatiesysteem voor gebruik in een duale hijskraan volgens één of meer van de voorgaande conclusies.

14. Vaartuig voorzien van een duale hijskraan volgens één of meer van de conclusies 1-12.

15. Werkwijze voor het hijsen van een last bij gebruik van een duale hijskraan volgens één of meer van de voorgaande conclusies, waarbij de werkwijze de stappen omvat van:
het aan de schijvenkop vergrendelen van de eerste schijvenset en het aan het schijvendok vergrendelen van de tweede schijvenset,
het hijsen van een last met het hoofdhijssamenstel tijdens het van deiningscompensatie voorzien van de hoofdhijskabel bij gebruik van het deiningscompensatiesysteem,
en/of
het aan de schijvenkop vergrendelen van de tweede schijvenset en het aan het schijvendok vergrendelen van de eerste schijvenset,
het hijsen van een last met het secundaire hijssamenstel tijdens het van deiningscompensatie voorzien van de secundaire hijskabel bij gebruik van het deiningscompensatiesysteem.

16. Werkwijze voor het neerlaten van een gantry van een duale hijskraan volgens conclusie 7, waarbij de werkwijze de stappen omvat van:
- het neerlaten van de giek naar een rustpositie;
- het onder constante spanning zetten van een hijskabel, bijv. de secundaire hijskabel, bijvoorbeeld door het deiningscompensatiesysteem of de bijbehorende hijslier te gebruiken, om daarmee de achterverstaging van de gantry te belasten;
- het initiëren van scharnieren van de onderste framesectie van de achterverstaging ten opzichte van de bovenste framesectie van de achterverstaging, bijvoorbeeld door een actuator te gebruiken, bijv. een hydraulische cilinder, of een tuggingkabel;

- het vieren van de oploefkabel om de gantry neer te laten, waarbij bij voorkeur constante spanning in de hijskabel wordt gehouden, totdat de gantry in de neergelaten positie daarvan is.

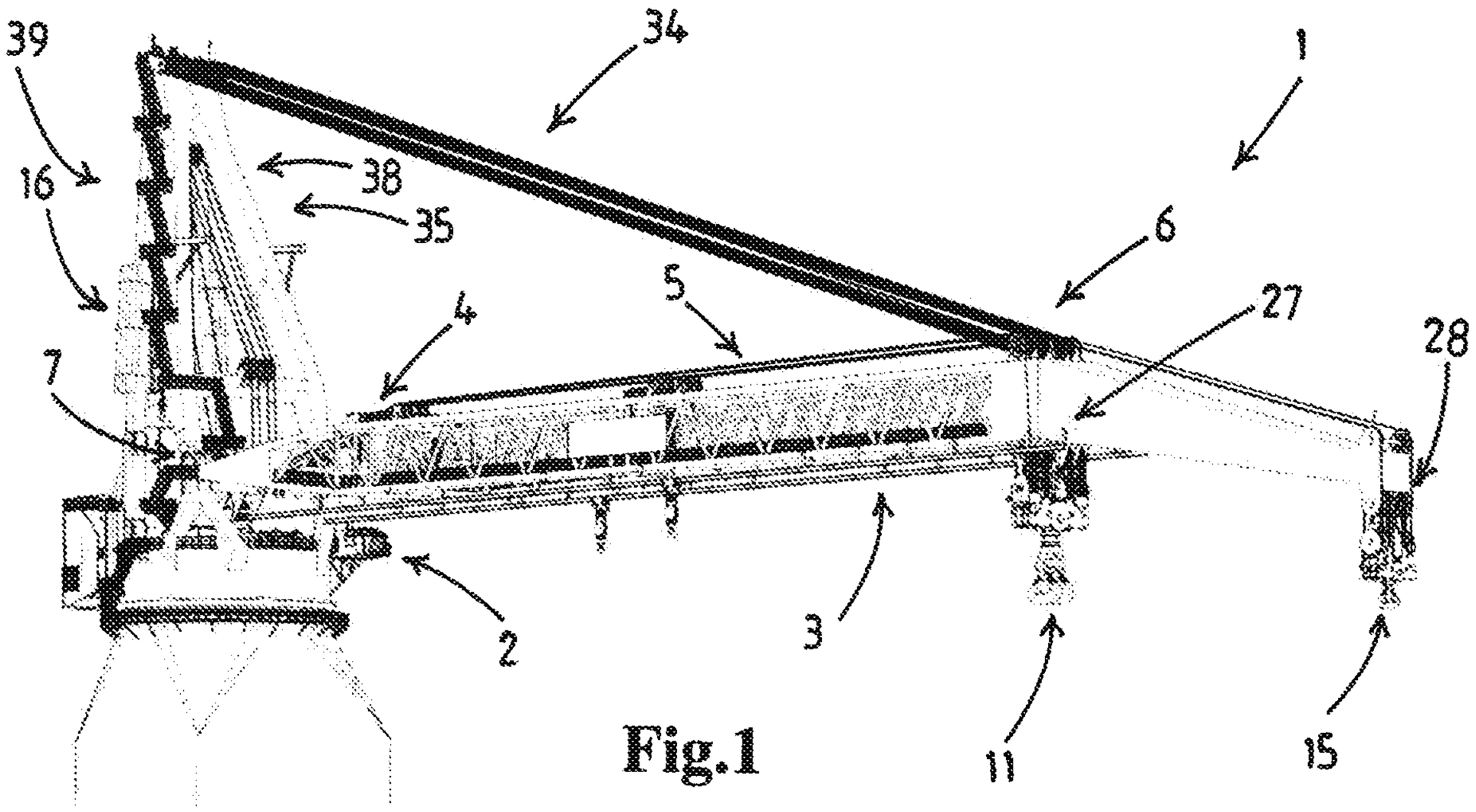
39
34
16
38
35
5
4
6
27
28
7
2
3
11
15

Fig.1

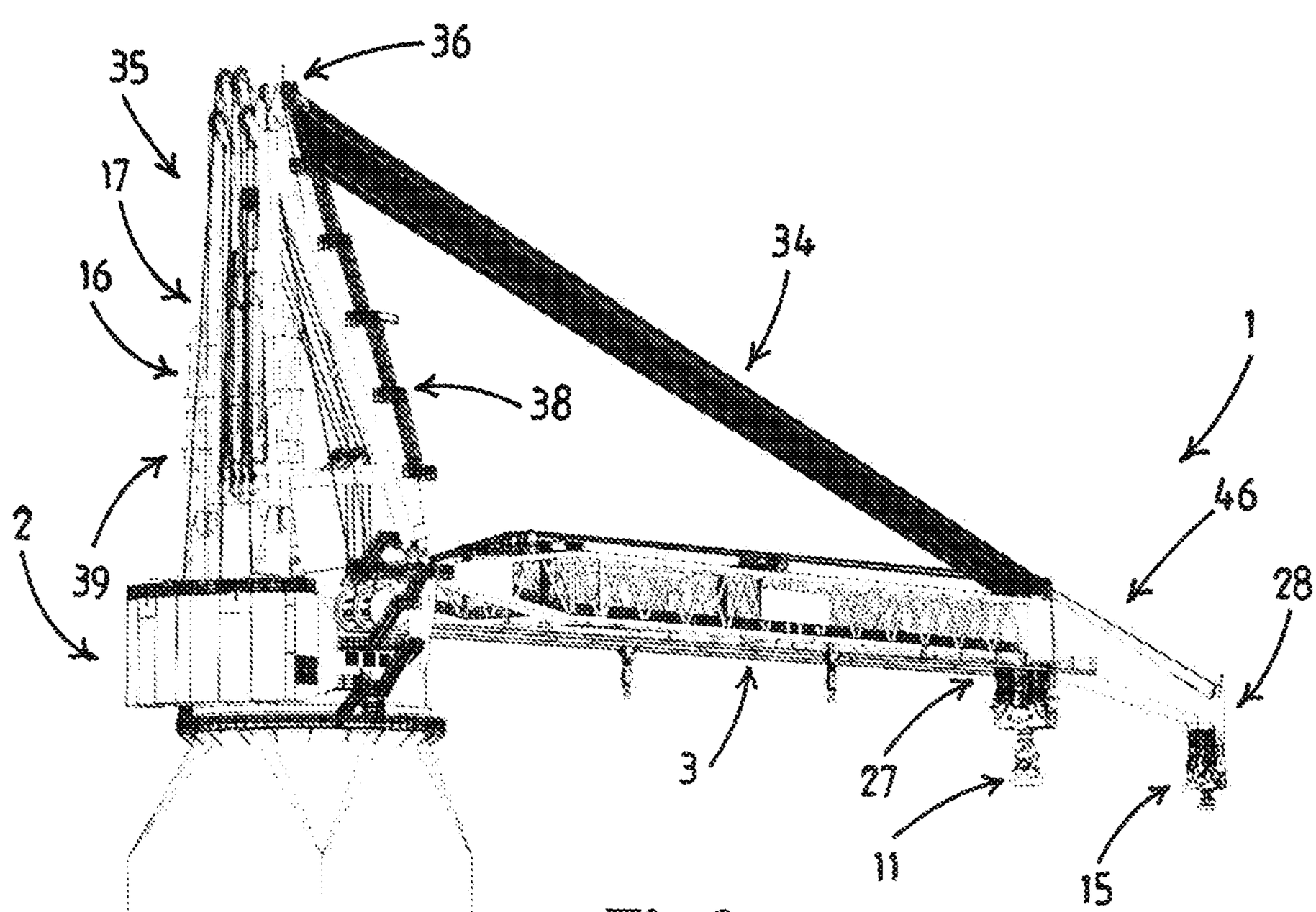
36
35
17
16
34
1
38
2
39
46
28
3
27
11
15

Fig.2

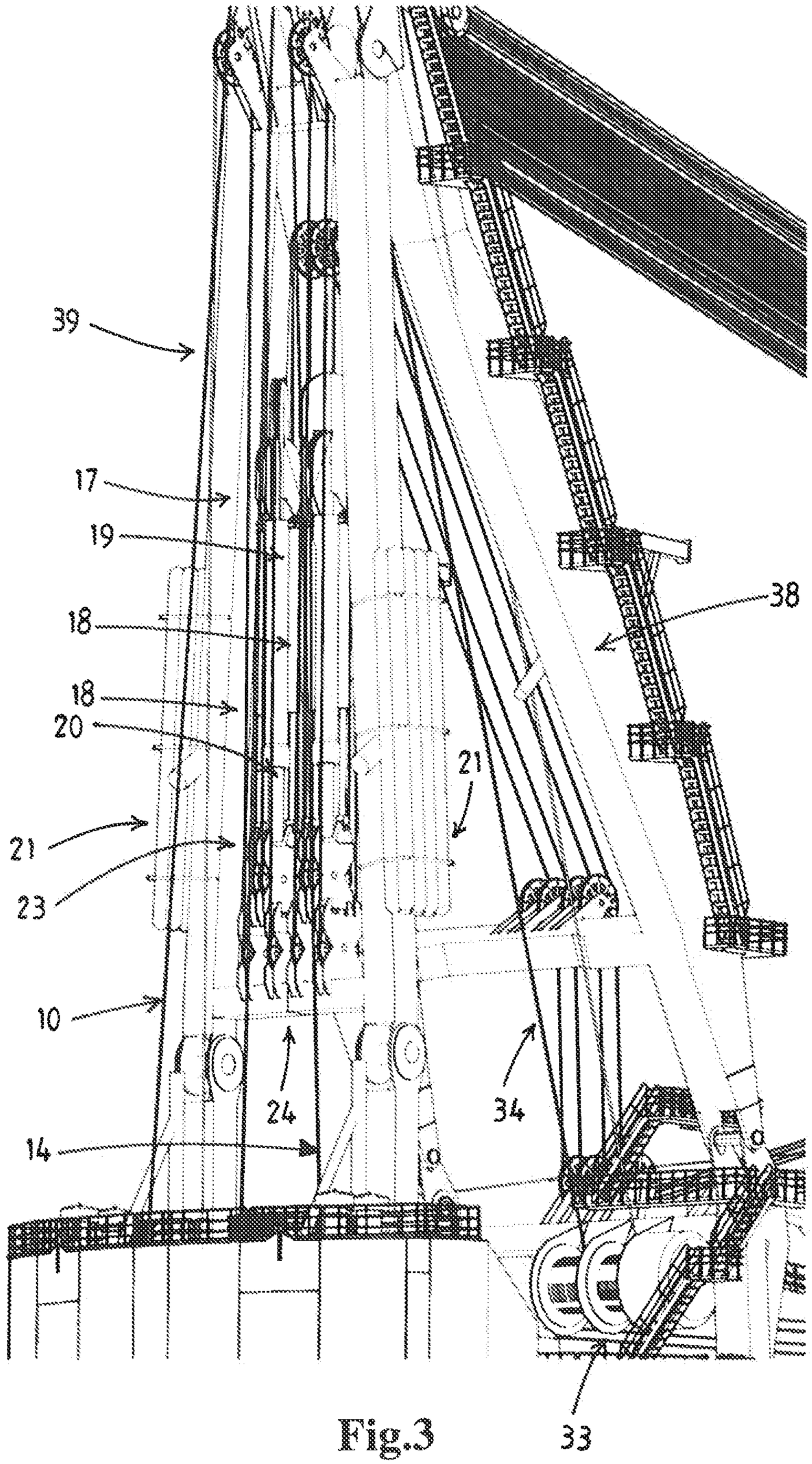

Fig.3

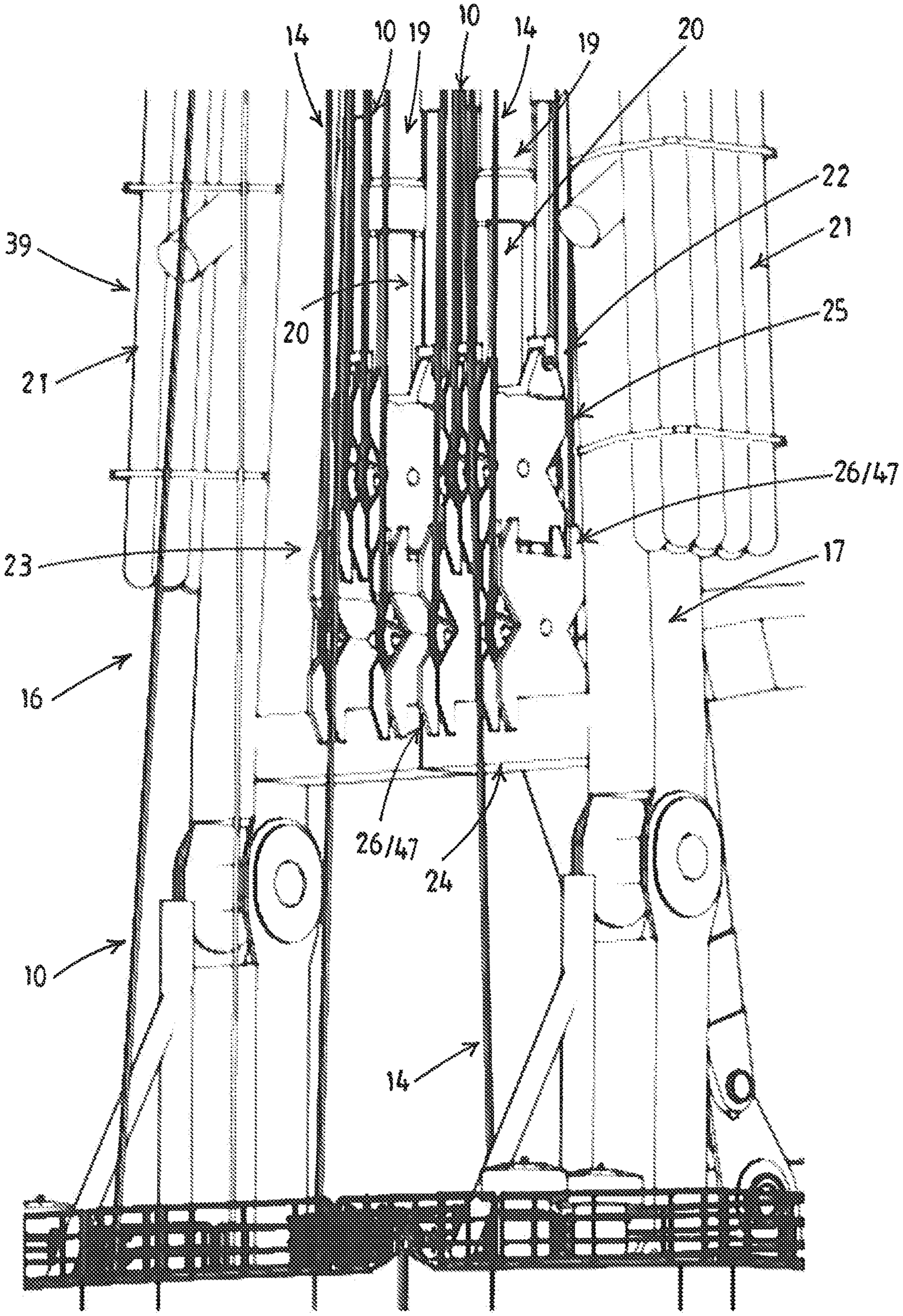

Fig.4

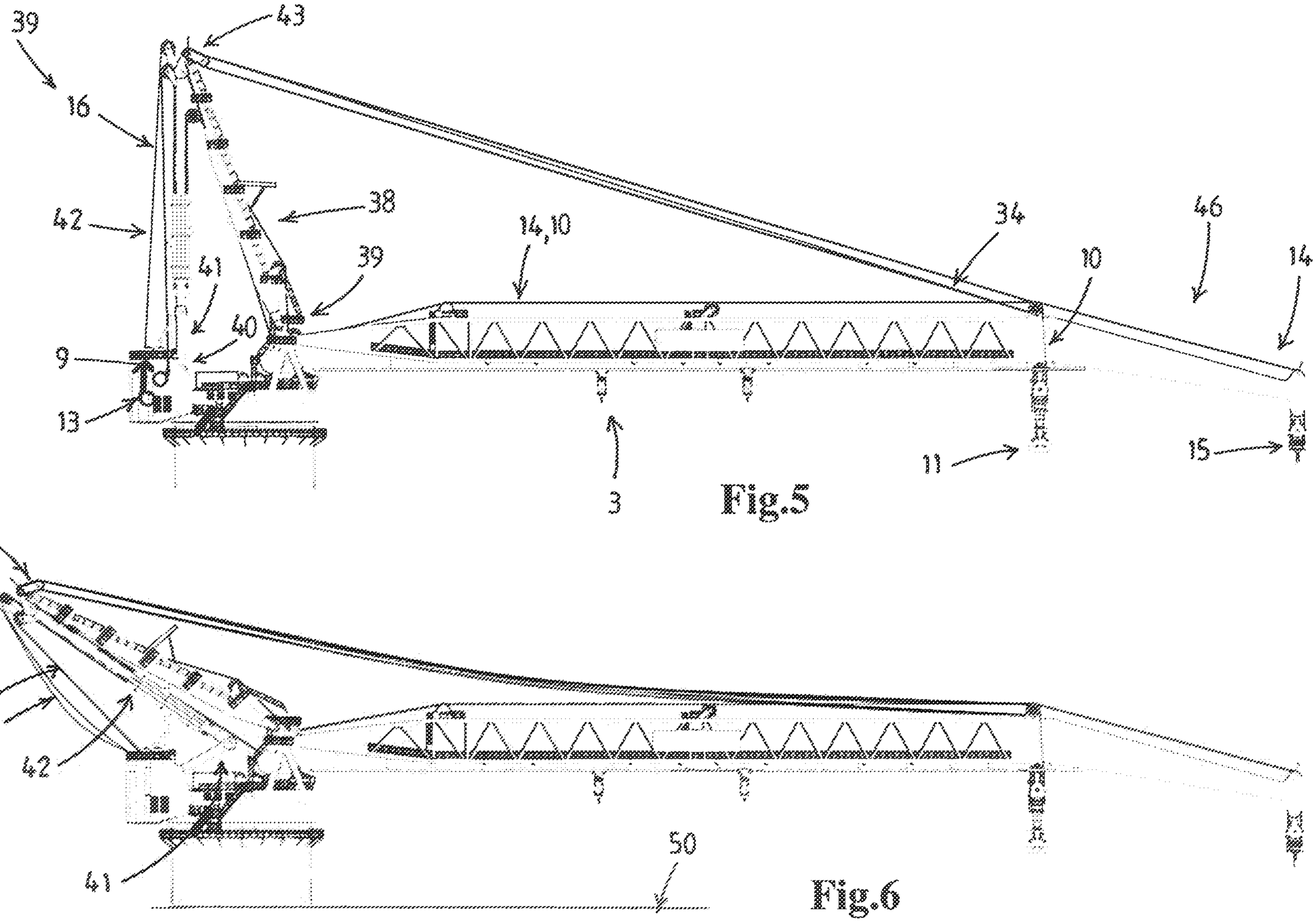

Fig.5

Fig.6

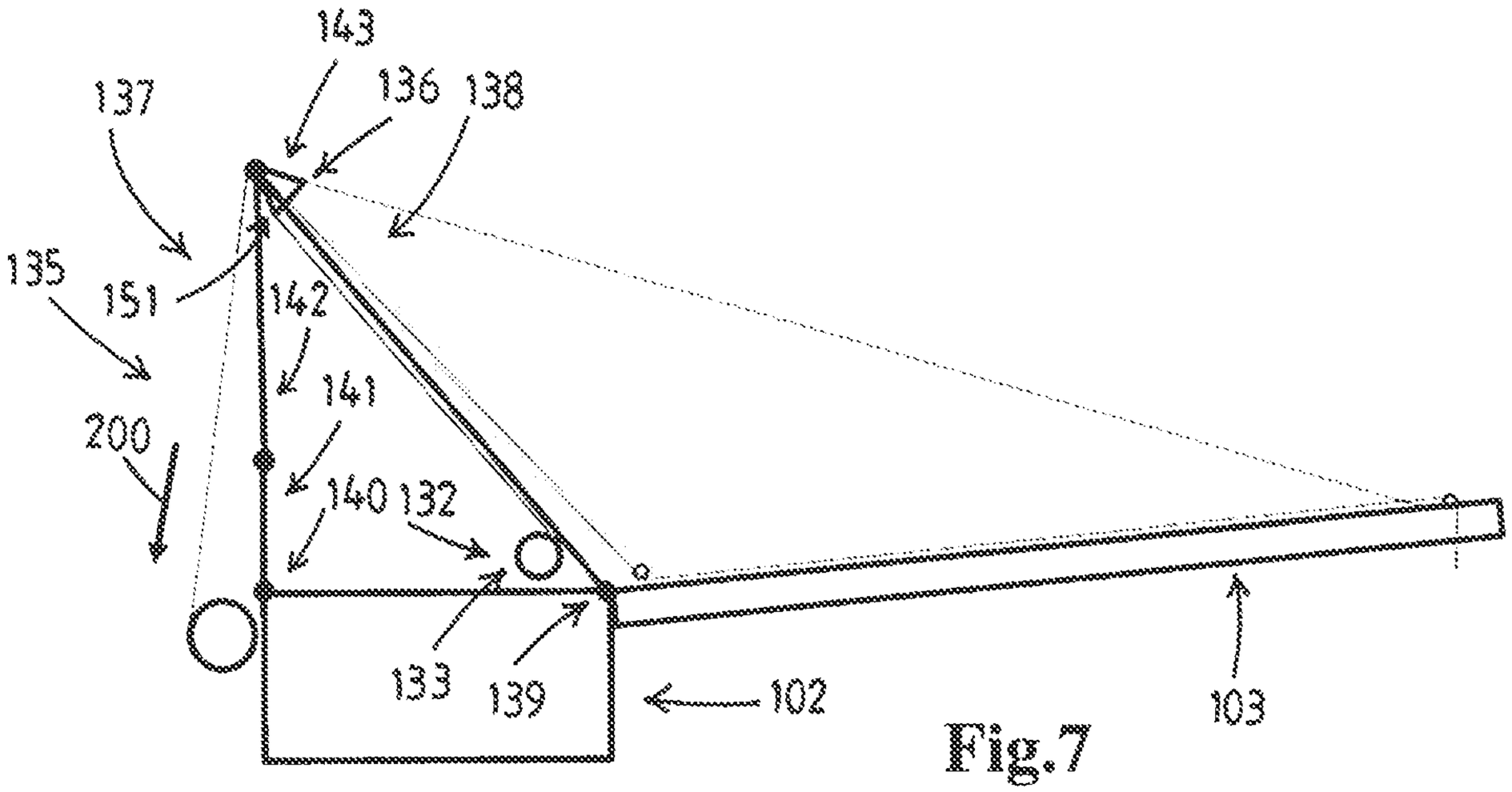

Fig.7

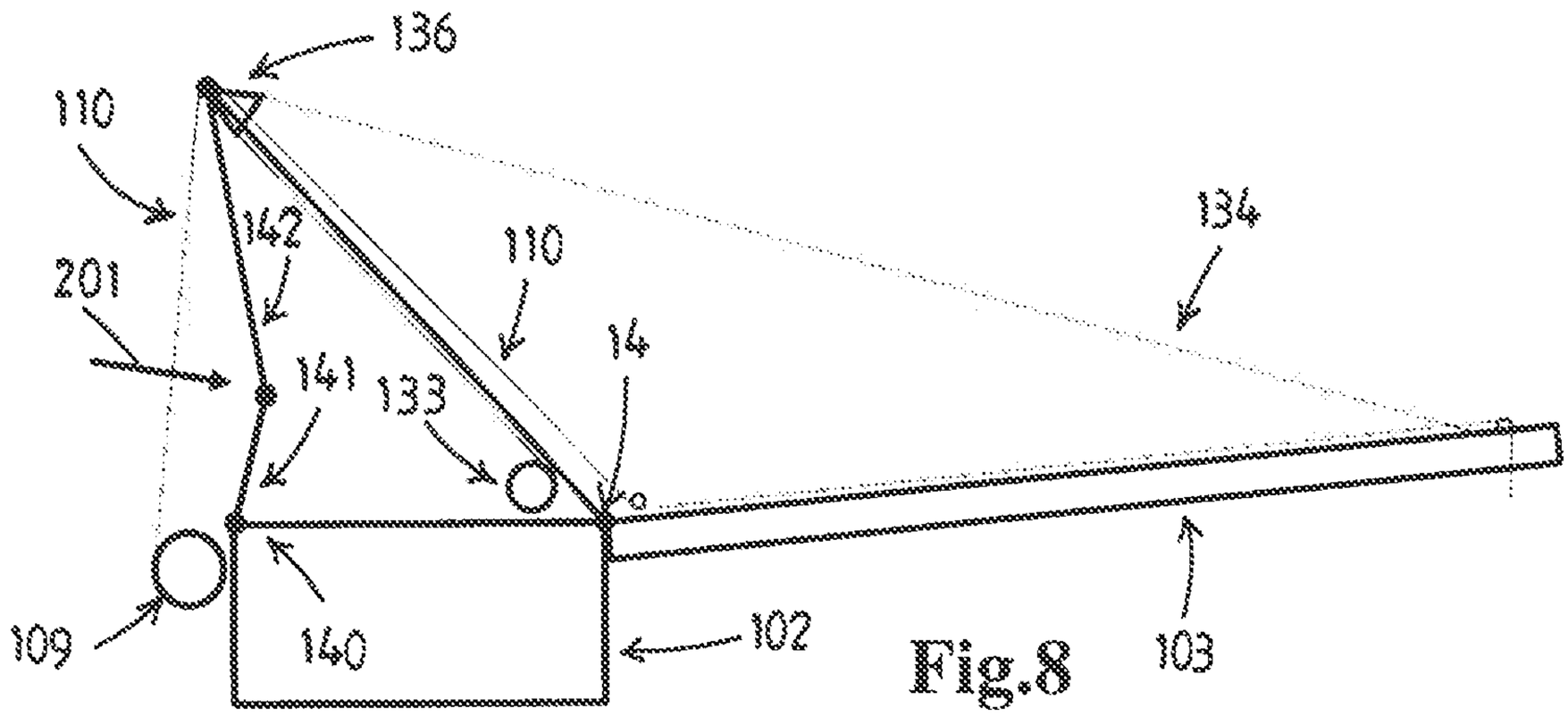

Fig.8

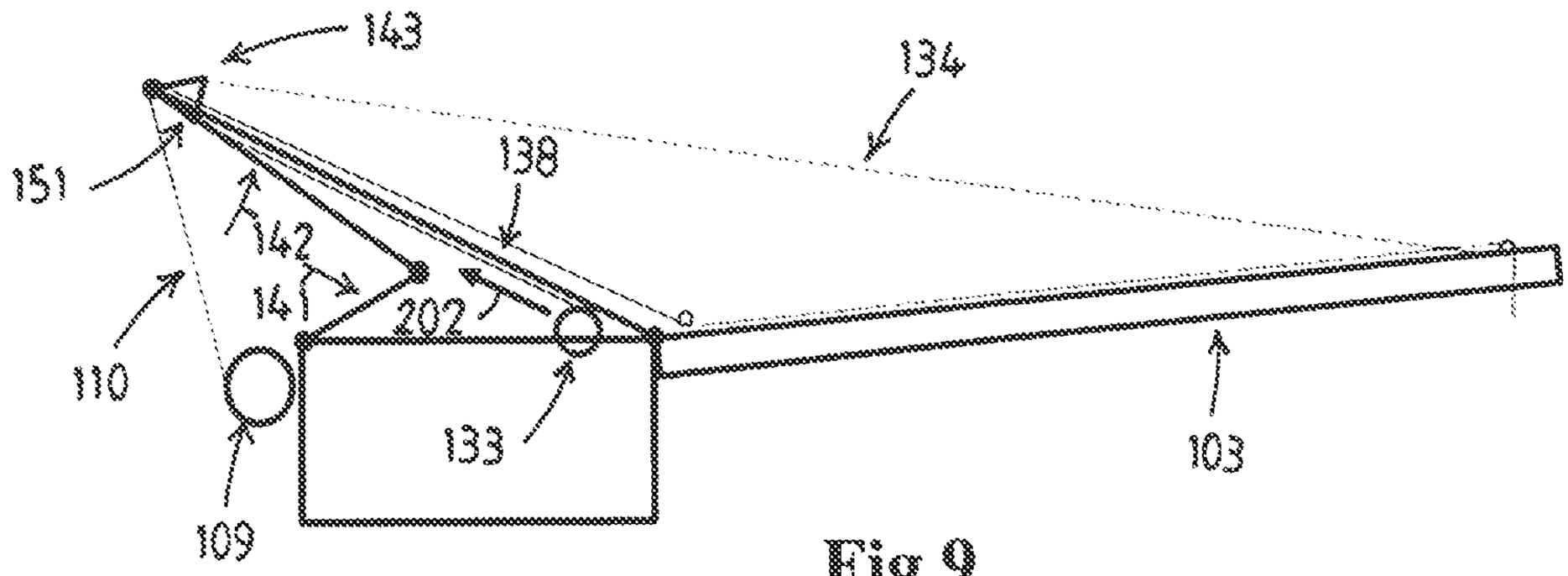

Fig.9

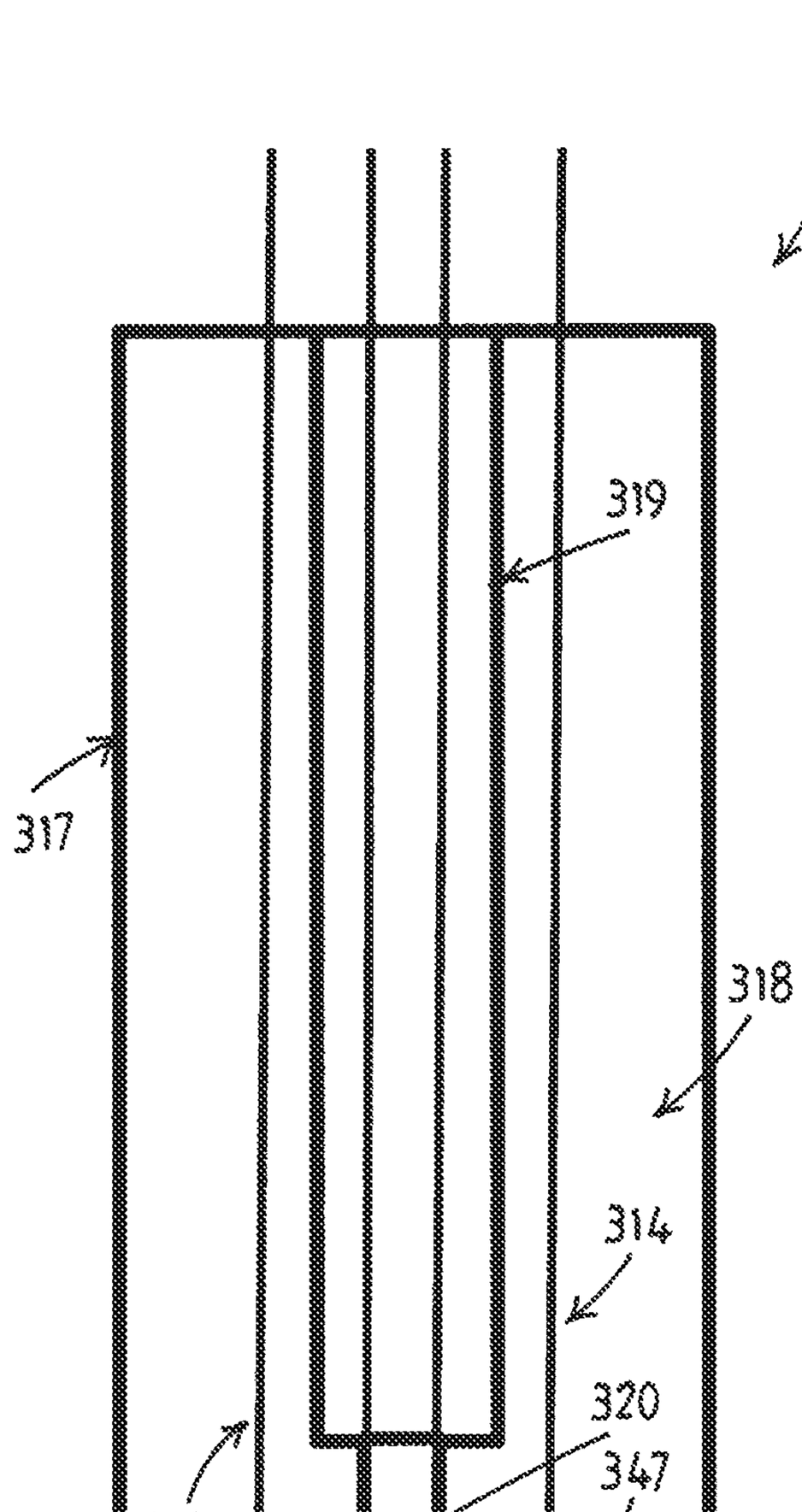
316
319
317
318
314
320
347
330
314
347
310
330
322
325
329
324

Fig.10

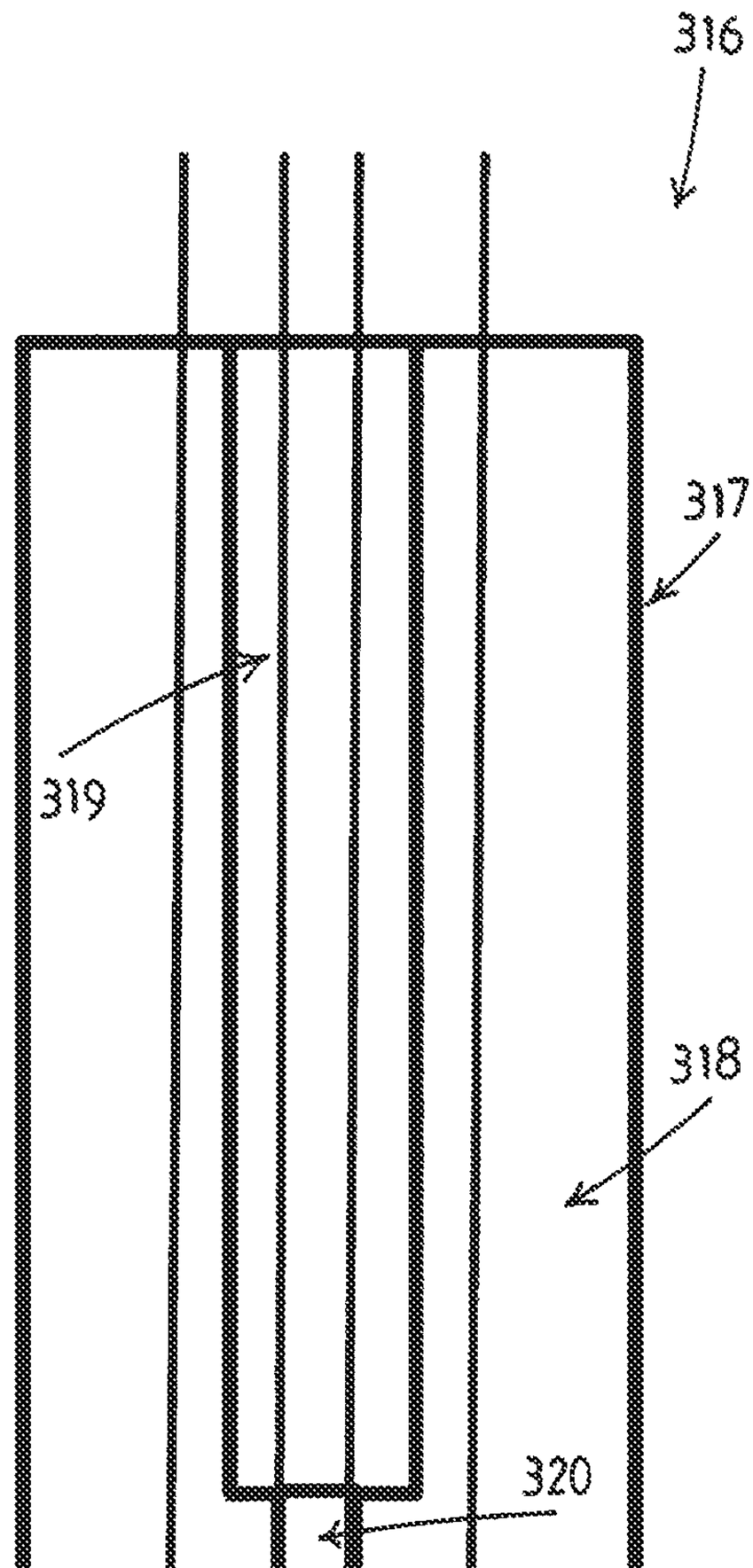
316
319
317
318
320
322
314
314
330
329
330
347
324
347

Fig.11

SAMENWERKINGSVERDRAG (PCT)

RAPPORT BETREFFENDE NIEUWHEIDSONDERZOEK VAN INTERNATIONAAL TYPE

IDENTIFICATIE VAN DE NATIONALE AANVRAGE	KENMERK VAN DE AANVRAGER OF VAN DE GEMACHTIGDE
	P34024NL00/MHR
Nederlands aanvraag nr. **2022877**	Indieningsdatum **05-04-2019**
	Ingeroepen voorrangsdatum
Aanvrager (Naam) **Itrec B.V.**	
Datum van het verzoek voor een onderzoek van internationaal type **29-06-2019**	Door de Instantie voor Internationaal Onderzoek aan het verzoek voor een onderzoek van internationaal type toegekend nr. **SN73968**

I. CLASSIFICATIE VAN HET ONDERWERP (bij toepassing van verschillende classificaties, alle classificatiesymbolen opgeven)

Volgens de internationale classificatie (IPC)

Zie onderzoeksrapport

II. ONDERZOCHTE GEBIEDEN VAN DE TECHNIEK

Onderzochte minimumdocumentatie

Classificatiesysteem	Classificatiesymbolen
IPC	**Zie onderzoeksrapport**

Onderzochte andere documentatie dan de minimum documentatie, voor zover dergelijke documenten in de onderzochte gebieden zijn opgenomen

III. ☐	**GEEN ONDERZOEK MOGELIJK VOOR BEPAALDE CONCLUSIES**	(opmerkingen op aanvullingsblad)
IV. ☐	**GEBREK AAN EENHEID VAN UITVINDING**	(opmerkingen op aanvullingsblad)

ONDERZOEKSRAPPORT BETREFFENDE HET RESULTAAT VAN HET ONDERZOEK NAAR DE STAND VAN DE TECHNIEK VAN HET INTERNATIONALE TYPE

Nummer van het verzoek om een onderzoek naar de stand van de techniek
NL 2022877

A. CLASSIFICATIE VAN HET ONDERWERP
INV. B66C13/02 B66C23/52
ADD.

Volgens de Internationale Classificatie van octrooien (IPC) of zowel volgens de nationale classificatie als volgens de IPC.

B. ONDERZOCHTE GEBIEDEN VAN DE TECHNIEK

Onderzochte miminum documentatie (classificatie gevolgd door classificatiesymbolen)
B66C B66D

Onderzochte andere documentatie dan de mimimum documentatie, voor dergelijke documenten, voor zover dergelijke documenten in de onderzochte gebieden zijn opgenomen

Tijdens het onderzoek geraadpleegde elektronische gegevensbestanden (naam van de gegevensbestanden en, waar uitvoerbaar, gebruikte trefwoorden)
EPO-Internal, WPI Data

C. VAN BELANG GEACHTE DOCUMENTEN

Categorie °	Geciteerde documenten, eventueel met aanduiding van speciaal van belang zijnde passages	Van belang voor conclusie nr.
A,D	US 840 684 A (BODE ALFRED [DE] ET AL) 8 januari 1907 (1907-01-08) in de aanvraag genoemd * het gehele document * -----	1
A,D	WO 2011/034422 A2 (ITREC BV [NL]; ROODENBURG JOOP [NL]; WIJNING DIEDERICK BERNARDUS [NL]) 24 maart 2011 (2011-03-24) in de aanvraag genoemd * samenvatting * * bladzijde 7, regel 24 - bladzijde 22; figuren * -----	1,15,16
X	EP 2 896 589 A1 (SAL OFFSHORE B V [NL]) 22 juli 2015 (2015-07-22)	13
A	* alineas [0024], [0038], [0043], [0052]; figuren * -----	1
	-/--	

[X] Verdere documenten worden vermeld in het vervolg van vak C.

[X] Leden van dezelfde octrooifamilie zijn vermeld in een bijlage

° Speciale categorieën van aangehaalde documenten

"A" niet tot de categorie X of Y behorende literatuur die de stand van de techniek beschrijft

"D" in de octrooiaanvrage vermeld

"E" eerdere octrooi(aanvrage), gepubliceerd op of na de indieningsdatum, waarin dezelfde uitvinding wordt beschreven

"L" om andere redenen vermelde literatuur

"O" niet-schriftelijke stand van de techniek

"P" tussen de voorrangsdatum en de indieningsdatum gepubliceerde literatuur

"T" na de indieningsdatum of de voorrangsdatum gepubliceerde literatuur die niet bezwarend is voor de octrooiaanvrage, maar wordt vermeld ter verheldering van de theorie of het principe dat ten grondslag ligt aan de uitvinding

"X" de conclusie wordt als niet nieuw of niet inventief beschouwd ten opzichte van deze literatuur

"Y" de conclusie wordt als niet inventief beschouwd ten opzichte van de combinatie van deze literatuur met andere geciteerde literatuur van dezelfde categorie, waarbij de combinatie voor de vakman voor de hand liggend wordt geacht

"&" lid van dezelfde octrooifamilie of overeenkomstige octrooipublicatie

Datum waarop het onderzoek naar de stand van de techniek van internationaal type werd voltooid	Verzenddatum van het rapport van het onderzoek naar de stand van de techniek van internationaal type
20 december 2019	

Naam en adres van de instantie	De bevoegde ambtenaar
European Patent Office, P.B. 5818 Patentlaan 2 NL - 2280 HV Rijswijk Tel. (+31-70) 340-2040, Fax: (+31-70) 340-3016	Verheul, Omiros

5

ONDERZOEKSRAPPORT BETREFFENDE HET RESULTAAT VAN HET ONDERZOEK NAAR DE STAND VAN DE TECHNIEK VAN HET INTERNATIONALE TYPE

Nummer van het verzoek om een onderzoek naar de stand van de techniek
NL 2022877

C.(Vervolg). VAN BELANG GEACHTE DOCUMENTEN

Categorie °	Geciteerde documenten, eventueel met aanduiding van speciaal van belang zijnde passages	Van belang voor conclusie nr.
A	WO 2018/151593 A1 (ITREC BV [NL]) 23 augustus 2018 (2018-08-23) * bladzijde 2, regel 15 - bladzijde 4, regel 21 * --- WO 2016/062812 A1 (ITREC BV [NL]) 28 april 2016 (2016-04-28) * samenvatting; figuren * * bladzijden 3-5; figuren * ---	1,15,16 1

5

ONDERZOEKSRAPPORT BETREFFENDE HET RESULTAAT VAN HET ONDERZOEK NAAR DE STAND VAN DE TECHNIEK VAN HET INTERNATIONALE TYPE

Informatie over leden van dezelfde octrooifamilie

Nummer van het verzoek om een onderzoek naar de stand van de techniek
NL 2022877

In het rapport genoemd octrooigeschrift	Datum van publicatie	Overeenkomend(e) geschrift(en)	Datum van publicatie
US 840684 A	08-01-1907	GEEN	
WO 2011034422 A2	24-03-2011	BR 112012006034 A2	12-04-2016
		CN 102630211 A	08-08-2012
		EP 2477927 A2	25-07-2012
		EP 3018087 A1	11-05-2016
		US 2012217063 A1	30-08-2012
		WO 2011034422 A2	24-03-2011
EP 2896589 A1	22-07-2015	DK 2896589 T3	23-01-2017
		EP 2896589 A1	22-07-2015
WO 2018151593 A1	23-08-2018	CN 110520376 A	29-11-2019
		EP 3583063 A1	25-12-2019
		WO 2018151593 A1	23-08-2018
WO 2016062812 A1	28-04-2016	BR 112017008237 A2	09-01-2018
		CN 107107998 A	29-08-2017
		CN 110077538 A	02-08-2019
		EP 3209549 A1	30-08-2017
		EP 3486158 A1	22-05-2019
		US 2017341717 A1	30-11-2017
		US 2019023359 A1	24-01-2019
		US 2019256173 A1	22-08-2019
		WO 2016062812 A1	28-04-2016

WRITTEN OPINION

File No.	Filing date *(day/month/year)*	Priority date *(day/month/year)*	Application No.
SN73968	05.04.2019		NL2022877
International Patent Classification (IPC) INV. B66C13/02 B66C23/52			
Applicant Itrec B.V.			

This opinion contains indications relating to the following items:

- ☒ Box No. I Basis of the opinion
- ☐ Box No. II Priority
- ☐ Box No. III Non-establishment of opinion with regard to novelty, inventive step and industrial applicability
- ☐ Box No. IV Lack of unity of invention
- ☒ Box No. V Reasoned statement with regard to novelty, inventive step or industrial applicability; citations and explanations supporting such statement
- ☐ Box No. VI Certain documents cited
- ☒ Box No. VII Certain defects in the application
- ☐ Box No. VIII Certain observations on the application

	Examiner
	Verheul, Omiros

Application number

WRITTEN OPINION

NL2022877

Box No. I Basis of this opinion

1. This opinion has been established on the basis of the latest set of claims filed before the start of the search.

2. With regard to any **nucleotide and/or amino acid sequence** disclosed in the application and necessary to the claimed invention, this opinion has been established on the basis of:

   a. type of material:

   ☐ a sequence listing

   ☐ table(s) related to the sequence listing

   b. format of material:

   ☐ on paper

   ☐ in electronic form

   c. time of filing/furnishing:

   ☐ contained in the application as filed.

   ☐ filed together with the application in electronic form.

   ☐ furnished subsequently for the purposes of search.

3. ☐ In addition, in the case that more than one version or copy of a sequence listing and/or table relating thereto has been filed or furnished, the required statements that the information in the subsequent or additional copies is identical to that in the application as filed or does not go beyond the application as filed, as appropriate, were furnished.

4. Additional comments:

Box No. V Reasoned statement with regard to novelty, inventive step or industrial applicability; citations and explanations supporting such statement

1. Statement

Novelty	Yes:	Claims	1-12, 14-16
	No:	Claims	13
Inventive step	Yes:	Claims	1-12, 14-16
	No:	Claims	13
Industrial applicability	Yes:	Claims	1-16
	No:	Claims	

2. Citations and explanations

see separate sheet

Application number

WRITTEN OPINION

NL2022877

Box No. VII Certain defects in the application

see separate sheet

Re Item V

Reasoned statement with regard to novelty, inventive step or industrial applicability; citations and explanations supporting such statement

Reference is made to the following documents:

D1 US 840 684 A (BODE ALFRED [DE] ET AL) 8 januari 1907 (1907-01-08)in de aanvraag genoemd

D2 WO 2011/034422 A2 (ITREC BV [NL]; ROODENBURG JOOP [NL]; WIJNING DIEDERICK BERNARDUS [NL]) 24 maart 2011 (2011-03-24)in de aanvraag genoemd

D3 EP 2 896 589 A1 (SAL OFFSHORE B V [NL]) 22 juli 2015 (2015-07-22)

D4 WO 2018/151593 A1 (ITREC BV [NL]) 23 augustus 2018 (2018-08-23)

1 Novelty

1.1 Claim 13 is drafted as an independent claim wherein the dual compensation system is suitable for (voor gebruik in) a dual crane. Such a system is disclosed in D3 and is therefore not new, see §41 and 46-48 wherein explicit mentioning is made of the second hoisting cable 13 being controlled by an active heave compensation system.

2 Inventive Step

2.1 Document D1 is regarded as being the closest prior art to the subject-matter of claim 1 and shows (the references in parentheses applying to this document):
Een duale hijskraan (Fig. 1), omvattende:
- een kraanstructuur;
- een giek (f), waarbij de giek (f) een binnenuiteinde, een middensectie en een buitenuiteinde heeft, welke giek (f) zodanig scharnierbaar is ondersteund door de kraanstructuur dat deze scharnierbaar is om een in hoofdzaak horizontale giekas (see connection pivot of part f with c, fig. 1);
- een hoofdhijssamenstel (lower lifting hook assembly), voor het heffen en neerlaten van een last, waarbij het hoofdhijssamenstel een hoofdhijslier (h1 left, fig. 1) en een bijbehorende hoofdhijskabe omvat, en een hoofdlastophanginrichting;

- een secundair hijssamenstel (h1 right, fig. 1) voor het heffen en neerlaten van een last, waarbij het secundaire hijssamenstel een secundaire hijslier en een bijbehorende secundaire hijskabel (see fig. 1, winch arrangement) heeft, en een secundaire lastophanginrichting;

2.2 The subject-matter of claim 1 therefore differs from this known dual lifting crane in that: de duale hijskraan (1) verder een duaal hijsdeiningscompensatiesysteem (16) omvat, waarbij het deiningscompensatiesysteem omvat:
- een ondersteuningsframe (17);
- een deiningscompensatiecilinder (18), die een aan het ondersteuningsframe (17) bevestigd cilinderlichaam (19) heeft en een cilinderstang (20), welke deiningscompensatiecilinder (18) is verbonden met een gasbuffer (21) om passieve deiningscompensatie mogelijk te maken;
- een schijvenkop (22), waarbij de schijvenkop (22) is ondersteund door de cilinderstang (20) voor beweging langs een deiningscompensatietraject (23);
- een schijvendok (24), bevestigd op het ondersteuningsframe (17) aan een uiteinde van het deiningscompensatietraject (23);
- een eerste schijvenset (25) die de hoofdhijskabel (10) van het hoofdhijssamenstel geleidt;
- een tweede schijvenset (26) die de secundaire hijskabel (14) van het secundaire hijssamenstel (12) geleidt;

waarbij de hoofdhijskabel (10) zich uitstrekt van de hoofdhijslier (9) langs het hijscompensatietraject (23), via de eerste schijvenset (25), en via ten minste één hoofdhijsschijf (27) aan het uiteinde (6) van de giek (3) naar de hoofdlastophanginrichting (11);

waarbij de secundaire hijskabel (14) zich uitstrekt van de secundaire hijslier (13) langs het deiningscompensatietraject (23), via de tweede schijvenset (26), en via ten minste één secundaire hijsschijf (25) aan het uiteinde van de giek (3), bij voorkeur aan een buitenuiteinde van een jib, naar de secundaire lastophanginrichting (15), en waarbij het duale hijsdeiningscompensatiesysteem (16) is ingericht om de eerste schijvenset (25) en de tweede schijvenset (26) individueel aan de schijvenkop (22) te vergrendelen, voor het van deiningscompensatie voorzien van respectievelijk het hoofdhijssamenstel (8) en het secundaire hijssamenstel (12), en om de eerste schijvenset (25) en de tweede schijvenset (26) individueel aan het schijvendok (24) te vergrendelen, voor het niet van deiningscompensatie voorzien van respectievelijk het hoofdhijssamenstel (8) en het secundaire hijssamenstel (12),

en het duale hijsdeiningscompensatiesysteem (16) het daarmee mogelijk maakt om uitsluitend het hoofdhijssamenstel (8) van deiningscompensatie te voorzien en om uitsluitend het secundaire hijssamenstel (12) van deiningscompensatie te voorzien.

2.3 The features of claim 1 are therefore new.

2.4 The problem to be solved by the present invention may therefore be regarded as an improvement of heave compensation of a dual crane system.

2.5 The solution proposed in claim 1 of the present application is considered as involving an inventive step because the above features are neither known nor would their inclusion in order to solve the above problem be obvious to the skilled man.

2.6 Although, D2-D4 disclose heave compensation arrangements with many common features of the characterising portion of claim 1, none of the documents found solve the problem of individual dual lifting making use of the technique as claimed in claim 1.

2.7 The features of the remaining dependent claims 2-12 and claim 14 wherein a vessel equipped with the dual crane of claim 1 is claimed, are considered allowable as they all depend on the novel and inventive claim 1.

2.8 The method claims 15 and 16 both feature certain steps of assembly and disassembly of the dual crane of claim 1. As the device is new and inventive, per definition so is the method describing certain process steps thereof.

3 **Re Item VII**

Certain defects in the application

3.1 The reference signs 8, 32 referred to in the description on page 14 do not appear in the drawings (inconsistency).

3.2 The features of the claims are not provided with reference signs placed in parentheses.

***