M. HUTCHINSON.

Butter-Worker.

No. 165,834. Patented July 20, 1875.

Fig. 1.

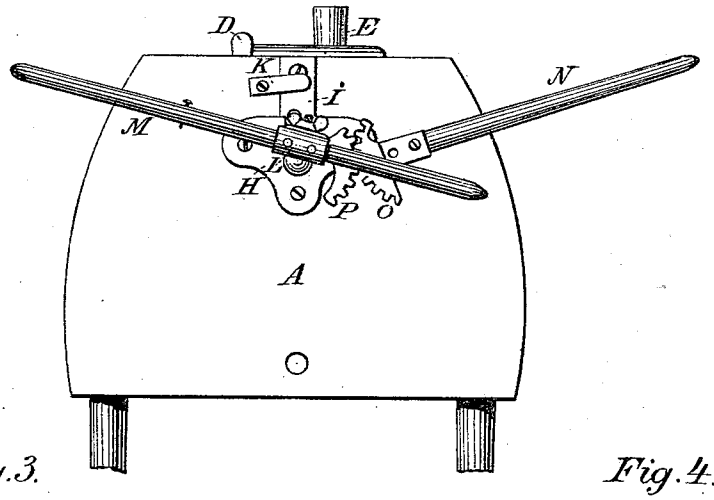

Fig. 3.

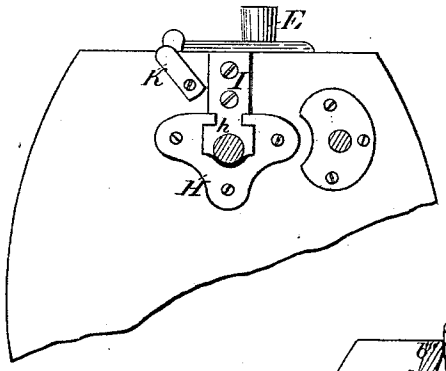

Fig. 4.

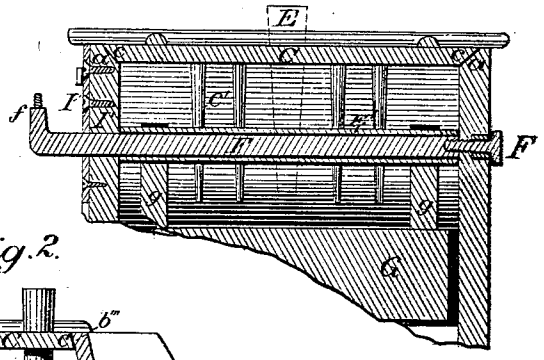

Fig. 2.

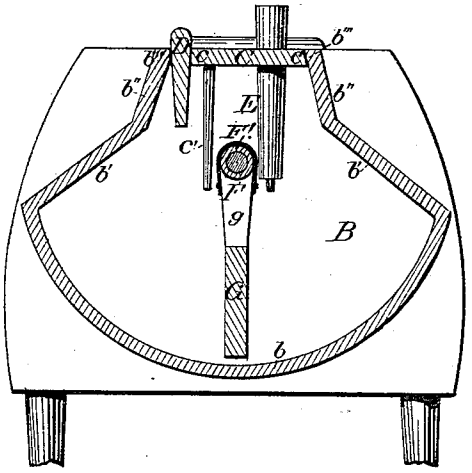

Attest:

C. F. Frill

Philip McNickle

Inventor:

Moses Hutchinson

per L. Deane.

Att'y.

N. PETERS, PHOTO-LITHOGRAPHER, WASHINGTON, D. C.

UNITED STATES PATENT OFFICE.

MOSES HUTCHINSON, OF OWATONNA, MINNESOTA.

IMPROVEMENT IN BUTTER-WORKERS.

Specification forming part of Letters Patent No. **165,834**, dated July 20, 1875; application filed June 7, 1875.

To all whom it may concern:

Be it known that I, MOSES HUTCHINSON, of Owatonna, in the county of Steele and State of Minnesota, have invented certain new and useful Improvements in Butter-Workers; and I do hereby declare that the following is a full, clear, and exact description thereof, which will enable others skilled in the art to which it pertains to make and use the same, reference being had to the accompanying drawing, and to the letters of reference marked thereon, which form a part of this specification.

Figure 1 is an end elevation. Fig. 2 is a vertical central section. Fig. 3 is a detail, showing the casting or metal pieces in which the shaft, &c., of the device works. Fig. 4 is a longitudinal vertical central section in a plane at right angles to Fig. 2.

The object of this invention is to present a device which shall be compact in structure, firm and strong in all its parts, and, by the peculiar details of form and arrangement of its several parts, most efficient in all the objects and ends for which it is designed to be used; and it consists more particularly, first, in the peculiar construction of the churning-chamber, and in the arrangement thereon of the paddle and other portions of the butter-worker; second, in the means used for attaching and affixing the shaft of the butter-worker; third, in the use of a double lever or handle for working the paddle; fourth, in the peculiar shape of the cover and the mouth of the device, whereby the said cover can be keyed or wedged in firm and tight; fifth, in the combination and arrangement of all the parts and portions of the device, all as will now be more specifically and in detail described and set forth.

In the accompanying drawings, A denotes the shell or exterior of the butter-worker; B, the interior chamber, the bottom *b* of which is usually about one-third of a circle. From the upper edges of this bottom the walls *b'* of said chamber incline inwardly at nearly right angles, and thus extend about two-thirds of the distance up to the top, where the angle of the incline of the walls *b''* is very much increased, and the sides of the mouth of this chamber B are formed by the upper edges of the walls *b''*, while the walls A form the ends, and thus said mouth is fitted and adapted in size and shape to receive the cover C. The inner edges of this mouth are beveled or inclined, as now shown at *a* and *b'''*. All the edges of the cover are also beveled, as now shown at *c*. The object of these peculiarities of construction in the mouth and of the cover is, that when the said cover is adapted to and keyed into its seat by the wedge D, it may and shall fit so securely as to be practically water-tight. When so secured and fitted it cannot, by use or accident, be easily shaken out of place, while, when it is desired to remove the said cover, a very slight force applied to the wedge D in a proper manner serves to break the fastening-joint. This cover has, on its under side, the pins *c'*, as ordinarily used to aid or assist in the process of butter-working. The usual ventilator or ventilating-tube E is shown as inserted in and through said cover. This projects above the said top any suitable distance, and down into the churning-chamber about as far as the pin *c'*. I have found this the best method of applying it. The shaft F I usually make of metal, and adjust to and upon it a suitable wooden sheathing, as now shown at F'. The arms *g* of the paddle are attached to this shaft at each end by bending them around or otherwise securing them to the sheathing F', or in any suitable way or manner, I have found that two such supports are best adapted for the effective operation of the paddle. This shaft may, at one end, be held by, and work upon, any convenient and suitable bearing or journal, as now shown by screw *f'*, or any like means may be used for the same purpose; while at the opposite end, on the outer face of the shell where the lever is applied, there are provided some metal castings of such peculiar shape and adaptation to each other that they can be readily fitted to each other and upon the machine, and with them the end of the shaft so affixed and secured that it can be readily adapted to its place or removed from position, as occasion may require. To accomplish this there is provided a metal plate, H, having in its upper side a slot, *h*, the lower portion of which is hollowed out for one end of shaft F, while its upper lines are so contracted as to furnish arms or projections to hold the key-

piece I, which is so formed as to lock into said plate *h*. This key-piece I is attached to and overlaps a wedge-like portion, I′, which fits into a slot in the end wall A, and is held in position by the movable arm K. In the lower end of I and I′ is a semicircular recess, which supplements the recess in base of slot *h*, and the two unite to embrace the end of shaft F, and afford the necessary bearing. To the outer projection *f* of the shaft is secured, in any suitable way, the sleeve L. Through this sleeve is placed the two-handled lever M, which can be freely moved, as occasion may require, in and through said sleeve. A single lever, N, may, when desired, be used to actuate the shaft in any convenient way. It is now shown as having a gear-segment, O, meshing into a corresponding segment, P, attached to the outer end of the shaft. Both of said levers can be attached to the device, and either used, as may be desired. In small churnings it makes but little difference which is used, but in large churnings the two-handled lever will be found of the greatest value, and in practice more work can be done by means of it, and in an easier way, than by any other means or device now used. The device may be mounted on legs or adapted in any other suitable and convenient way for use.

It will be seen from the above description that I have in this device almost wholly obviated and done away with sharp angles and corners, and thus my said device is not liable to be readily clogged up, and can be easily and quickly cleaned. I have also so constructed the churning-chamber proper that there is provided an air space or chamber over the space usually occupied by the cream. Thus there is afforded by the shape of the chamber and this detail of construction the most essential requisites in an efficient and useful butter-worker, and in operation I can exert any amount of force upon the cream that is necessary or desirable for accomplishing the ends had in view in this class of devices.

My butter-wo ker, in its practical operation, never breaks the grain of the butter while working it the first time, and the device is also adapted to work the butter a second time when desired. These ends are of special importance and value in butter-workers, as all used to them will fully understand.

Having thus clearly described my said invention, what I consider new, and desire to secure by Letters Patent, is—

1. In the butter-worker, substantially as herein described, the chamber B, having a rounded bottom, *b*, inclined sides *b′* and *b″*, and cover C, attached as shown, and provided with pins *c* and ventilator E, the whole combined substantially as and for the purposes set forth.

2. The shaft F, constructed and carrying the paddle *g*, as described, and journaled or pivoted and combined with the plates H and I, wedge I′, and arm K, substantially as and for the purposes set forth.

3. In the butter-worker, substantially as herein described, the shaft F, the detachable sleeve L, and double lever-arm M, arranged and combined with the paddle G *g*, so that a vibratory motion of the paddle may be easily produced, substantially in the manner and for the purposes set forth.

4. In combination with the mouth of the chamber B, formed by the beveled edges of the sides *b″* and walls A, the cover C, with beveled edges *e*, and wedge D, substantially as and for the purposes described.

5. The combination of arm N, segment-gears O P, and shaft F F′ and paddle G, substantially as and for the purposes set forth.

6. In a butter-worker, substantially as described, the combination of the rounded bottom *b*, sides *b′ b″* and cover C *c c′*, wedge D, ventillator E, shaft F F′ and paddle G *g*, whereby a free air-space is allowed over the cream, and all right-angled points are obviated, substantially as described.

In testimony that I claim the foregoing as my own, I affix my signature in presence of two witnesses.

MOSES HUTCHINSON.

Witnesses:
L. S. PADGHAM,
THOS. THOMPSON.