(19) DANMARK

(10) DK/EP 2630478 T3

(12) Oversættelse af europæisk patentskrift

Patent- og Varemærkestyrelsen

(51) Int.Cl.: *G 01 N 24/08 (2006.01)* *G 01 F 1/56 (2006.01)* *G 01 R 33/44 (2006.01)*

(45) Oversættelsen bekendtgjort den: **2018-06-18**

(80) Dato for Den Europæiske Patentmyndigheds bekendtgørelse om meddelelse af patentet: **2018-04-25**

(86) Europæisk ansøgning nr.: **11834799.6**

(86) Europæisk indleveringsdag: **2011-09-14**

(87) Den europæiske ansøgnings publiceringsdag: **2013-08-28**

(86) International ansøgning nr.: **US2011051497**

(87) Internationalt publikationsnr.: **WO2012054151**

(30) Prioritet: **2010-10-19 US 907707**

(84) Designerede stater: **AL AT BE BG CH CY CZ DE DK EE ES FI FR GB GR HR HU IE IS IT LI LT LU LV MC MK MT NL NO PL PT RO RS SE SI SK SM TR**

(73) Patenthaver: **Baker Hughes, a GE company, LLC, 17021 Aldine Westfield, Houston, TX 77073, USA**

(72) Opfinder: **LI, Lilong, 7327 Bearden Falls Lane, Humble, TX 77396, USA**
CHEN, Songhua, 23015 Cable Terrace Drive, Katy, TX 77494, USA
EDWARDS, Carl M., 23303 Millcross Lane, Katy, TX 77494, USA
ONG, Joo Tim, 2910 Kenross Street, Houston, TX 77043, USA

(74) Fuldmægtig i Danmark: **Zacco Denmark A/S, Arne Jacobsens Allé 15, 2300 København S, Danmark**

(54) Benævnelse: **MULTIFASEFLOWMÅLING UNDER ANVENDELSE AF KERNEMAGNETISK RESONANS**

(56) Fremdragne publikationer:
DE-A1- 4 119 711
JP-A- 2001 269 326
US-A- 4 574 240
US-A- 4 901 018
US-A- 6 046 587
US-A1- 2007 164 737
US-B2- 7 459 907
ONG J T ET AL: "In Well Nuclear Magnetic Resonance (NMR) Multiphase Flowmeter in the Oil and Gas Industry", SPE ANNUAL TECHNICAL CONFERENCE AND EXHIBITION, 26-29 SEPTEMBER, HOUSTON, TEXAS,, no. SPE-89978-MS, 26 September 2004 (2004-09-26), pages 777-786, XP002735094, DOI: 10.2118/89978-MS

DESCRIPTION

BACKGROUND OF THE DISCLOSURE

[0001] Multiphase fluid flows are common in pipes used in the transport of hydrocarbons such as for the petroleum industry. Accurate measurement of flow rates and phases of multiphase fluid flows proves to be difficult. The use of Nuclear Magnetic Resonance (NMR) can be used to determine phase constituents in a fluid. US patent application 6,046 587 discloses a method of estimating a flow rate in a pipe of a selected phase of a multiphase fluid with a combination of an NMR and an ESR spectrometer. In particular, the ESR spectrometer senses unpaired electrons, which are present in most crude oils, but not in water or gas. The water fraction is determined by the NMR sensor. The present invention provides a method and apparatus for measuring flow rates of a multiphase fluid flow using NMR techniques.

SUMMARY OF THE DISCLOSURE

[0002] In one aspect, the present invention provides a method of estimating a flow rate in a pipe of a selected phase of a multiphase fluid with a nuclear magnetic resonance (NMR) spectrometer according to independent claim 1. Dependent claims 2 to 7 contain advantageous embodiments of the invention.

[0003] In another aspect, the present invention provides an apparatus for estimating a flow rate in a pipe of a selected phase of a multiphase fluid according to independent claim 8. Dependent claims 9 to 13 contain advantageous embodiments of the invention.

[0004] Examples of certain features of the apparatus and method disclosed herein are summarized rather broadly in order that the detailed description thereof that follows may be better understood. There are, of course, additional features of the apparatus and method disclosed hereinafter that will form the subject of the claims.

BRIEF DESCRIPTION OF THE DRAWINGS

[0005] For detailed understanding of the present disclosure, references should be made to the following detailed description, taken in conjunction with the accompanying drawings, in which like elements have been given like numerals and wherein:

FIG. 1 shows an exemplary Nuclear Magnetic Resonance (NMR) flow meter device for estimating a flow rate of a fluid phase in a pipe using the exemplary methods of the present disclosure;

FIG. 2A shows an exemplary multiphase fluid flowing in a pipe;

FIG. 2B shows fluid flow of the exemplary multiphase fluid of FIG. 2A in a pipe including a first section having a first radius and a second section having second radius;

FIG. 3 shows an exemplary signal obtained in response to a NMR excitation pulse applied to a fluid flowing in the exemplary flow meter device of FIG. 1 ;

FIG. 4 shows a graph of an exemplary velocity distribution related to the exemplary signal of FIG. 3 ; and

FIG. 5 shows a flowchart of an exemplary method of the present disclosure for determined a flow rate of a phase of a fluid.

DETAILED DESCRIPTION OF THE DISCLOSURE

[0006] FIG. 1 shows an exemplary Nuclear Magnetic Resonance (NMR) flow meter device 100 for estimating a flow rate of a fluid phase using the exemplary methods of the present disclosure. According to the invention, the fluid is a multiphase fluid. In an embodiment, the fluid is a fluid flowing in a pipe for transportation of hydrocarbons. The exemplary NMR flow meter 100 includes a pre-polarization section 102 for polarizing nuclear spins of fluid along a selected direction, a detection section 110 for providing NMR excitation pulses to the fluid and obtaining NMR signals in response to the NMR excitation pulses from the fluid, and a testing unit 126 for receiving the NMR response signals from the detection section 110 and performing calculations on the received NMR response signals to obtain a flow rate of a phase of the fluid. In the illustrative example of FIG. 1, fluid flows from left to right so as to flow from pre-polarization section 102 into the detection section 110. The pre-polarization section 102 includes a pre-polarization pipe section 106 and a pre-polarization magnet 104 which may be exterior to the pre-polarization pipe section 106 in one embodiment. The pre-polarization magnet 104 is arranged so as to provide a static magnetic field in a volume of the pre-polarization pipe section 106, generally along a substantially axial direction of the pipe section 106. As fluid passes through the static magnetic field, nuclear spins of atoms and molecules within the fluid align along the direction of the static magnetic field. As shown in FIG. 1, the pre-polarization pipe section 106 has a enlarged cross-sectional area. The reason for this particular configuration for the pre-polarization pipe section 106 is discussed below with respect to FIGS. 2A and 2B.

[0007] Continuing with FIG. 1, detection section 110 is downstream of the pre-polarization section 102 and receives polarized fluid from the pre-polarization section 102. The detection section 110 includes a detection pipe section 112, a detection magnet 114 which may be exterior to the detection pipe section 112 for providing a static magnetic field in a volume of the detection pipe section 112, and a radio frequency (RF) coil 116. The RF coil 116 encloses a

volume within the detection pipe section and is arranged to provide one or more NMR excitation pulses to the fluid in the detection section 120 and to detect one or more NMR response signals from the fluid in the detection section 120.

[0008] Testing unit 126 includes various circuitry for obtaining one or more NMR response signals from the fluid and estimating a flow rate of a phase of the fluid from the obtained NMR response signals. The exemplary testing unit 126 is coupled to the RF coil 116 via preamplifier 120. The exemplary testing unit 126 includes a transmitter 124 for providing an NMR excitation pulse to the RF coil 116 via preamplifier 120. In one embodiment, the transmitter 124 provides multiple NMR excitation pulse sequences, each NMR excitation pulse sequence tuned to a selected nuclear resonance frequency. In one aspect, a first nuclear resonance frequency is that of the nuclei of H^1 atoms and a second nuclear resonance frequency is that of the nuclei of C^{13} atoms. The exemplary testing unit 126 also includes a receiver 122 for receiving NMR response signals detected at the RF coil 116 via the preamplifier 120. Testing unit 126 also includes an NMR spectrometer 126 for estimating one or more parameters of the fluid from the received NMR response signals using exemplary methods of the present disclosure. In one embodiment, the spectrometer 126 may include a processor 130, one or more computer programs 132 that are accessible to the processor 130 for executing instructions contained in such programs to obtain one or more fluid-related parameters such as a flow rate, and a storage device 134, such as a solid-state memory, tape or hard disc for storing the one or more parameters obtained at the processor 130.

[0009] The pre-polarization pipe section 106 of FIG. 1 is now discussed in reference to FIGS. 2A and 2B. FIG. 2A shows an exemplary multiphase fluid flowing in a pipe 200. Three phases 202, 204 and 206 of the multiphase fluid are shown. Each phase of the fluid exhibits an exemplary flow velocity profile 212, 214 and 216. A fluid or fluid phase under laminar flow exhibits a velocity profile that has a slow section at the boundaries of the fluid and a fast section typically away from the boundaries. In general, the fast section of the fluid passes through a pipe section before the slowest portion does. The speed of the fluid affects a degree of alignment of the nuclei of the fluid. Nuclear alignment occurs over a characteristic time, as described below with respect to Eq. (1). When a fluid is flowing in a volume of a static magnetic field, the slow portion of the fluid remains in the volume longer than the fast portion of the fluid. Thus, the slow portion of the fluid is typically fully aligned with the static magnetic field upon leaving the volume while the fast portion of the fluid typically leaves the volume without being fully aligned.

[0010] FIG. 2B shows fluid flow in a pipe configuration 201 including a first section having a first radius and a second section having a second radius. This pipe configuration of FIG. 2B corresponds in general to upstream pipe section 108 and pre-polarization pipe section 106 of FIG. 1. The radius and therefore the cross-section of the second section is greater than the radius and cross-section of the first section. Flow rate is a volumetric quantity that is a constant proportional to $\pi r^2 v$ with v being the average velocity. Therefore, the average velocity of the second section (larger cross-section) is less than the average velocity of the first section

(smaller cross-section). In addition, flow velocity profiles 222, 224 and 226 are flatter. The maximum velocity v_m of a fluid phase is therefore reduced based on two mechanisms. First, the maximum velocity is reduced due to the reduction of the average velocity. Secondly, the maximum velocity is reduced due to flattening of the flow boundary. Reducing the maximum velocity v_m therefore enables a substantially uniformly polarized fluid to exit the pre-polarization regions, as discussed below.

[0011] Reducing maximum velocity also affects design considerations for the length of the pre-polarization magnet. The magnetic polarization M_P of a fluid passing through a polarizing volume such as pre-polarization section 102 is determined by:

$$M_P = M_0\left(1-\exp\left(-t/T_1\right)\right) \qquad \text{Eq. (1)}$$

where t is the residence time of the fluid inside the polarizing volume, T_1 is a spin-lattice relaxation time, and M_0 is the maximum polarization amplitude. For a portion of a fluid that moves with a velocity v and passes through a volume of magnetization length L_M, Eq. (1) can be rewritten as

$$M_P = M_0\left(1-\exp\left(-L_M/vT_1\right)\right) \qquad \text{Eq. (2)}$$

For a general fluid flow, a slow portion of the fluid generally reaches a maximum polarization (degree of alignment), i.e. $Mp \approx M_0$ by the time it exits the pre-polarization volume. The length requirement for a magnet producing a volume to polarize a fast fluid portion is determined by Eq. (2) and the maximum velocity v_m of the fluid through the polarizing volume. Therefore, reducing v_m can reduce the length requirement of the magnet (L_M) by a proportional amount.

[0012] Methods for obtaining an NMR signal are now discussed. In a typical NMR experiment using the apparatus of FIG. 1, nuclei of various atoms and molecules of a material are subjected to a static magnetic field in the pre-polarization section 102 so that the nuclear spins are aligned along the direction of the static magnetic field as given by Eqs. (1) and (2). When the fluid enters the detection section 110, a radio frequency (RF) pulse sequence is applied to the polarized nuclei. The RF excitation pulse sequence may be any number of excitation pulse sequences known in the art for NMR testing including a Carr-Purcell-Meiboom-Gill (CPMG) pulse sequence. The applied excitation pulse sequence typically reorients the nuclear spins out of alignment with the applied static magnetic field and allows the unaligned nuclei to relax back into alignment with the static magnetic field. The relaxation of these nuclei back into alignment along the direction of the static magnetic field is characterized by a time constant T_1 known as the spin-lattice relaxation rate. The unaligned nuclear spins also typically fall out of phase with each other. The rate of dephasing is characterized by a time constant T_2 known as the spin-spin relaxation rate. Both T_1 and T_2 are characteristic of the particular nucleus. Therefore response signals are typically measured to identify constituents of the material. These methods can be used on solids, liquids and gases.

[0013] For fluid flowing in the exemplary flow meter device of FIG. 1, nuclei excited by an excitation pulse leave the detection volume enclosed by RF coil 116 at an average flow velocity v. The number of excited spins remaining in the volume to contribute to the NMR response

signal therefore diminishes with time due to fluid flow. At high fluid velocities, the effect of spin relaxation to the signal is negligible in comparison to the effect of fluid velocity. Therefore, the NMR response signal thus decays over time at a rate that is indicative of flow velocity.

[0014] A selected response signal may be related to one or more phases of the fluid. A typical multiphase fluid in petroleum exploration contains a hydrocarbon phase and a water phase. The water phase includes primarily water molecules and therefore primarily hydrogen and oxygen atoms. Thus, the water phase is responsive to an H^1 NMR excitation. Since carbon atoms are generally not present in the water phase, the water phase is generally unresponsive to C^{13} NMR excitation. The hydrocarbon phase, on the other hand, includes molecules that are relatively rich in carbon atoms. Thus, the hydrocarbon phase is responsive to C^{13} NMR excitations as well as to H^1 NMR excitations. Therefore, C^{13} NMR response signals and H^1 NMR response signals may be used to determine water and hydrocarbon phase flow velocities and flow rates, as discussed below.

[0015] FIG. 3 shows an exemplary response signal *A(t)* measured in response to an NMR pulse as spins pass out of a detection section 110. The exemplary signal of FIG. 3 may represent a response from a particular set of nuclei, such as an H^1 response signal or a C^{13} signal. For a particular response signal, the signal may be plotted against time and an extrapolation made to determine an echo signal amplitude at time *t=0*. A particular response signal obtained at the RF coil 116 has contributions from fluid flowing at various velocities. Thus response signal *A(t)* can be written as:

$$A(t)=\int_{v=0}^{v_m} a_v\left(1-\frac{vt}{L_D}\right) \quad v_m=\frac{L_D}{t} \qquad \text{Eq. (6)}$$

where a_V is the signal amplitude of a fluid moving at velocity *v* and L_D is a length of a detection volume. The majority of the fluid moves at a velocity fast enough so that the majority of the signal decay is due to the moving of excited nuclei out of the volume defined by the RF coil 116, as stated above. Under this condition, Eq. (6) can be rewritten in discrete form:

$$A(t)=\sum_i a_i\left(1-\frac{v_i t}{L_D}\right) \qquad \text{Eq. (7)}$$

where a_i is the signal amplitude of a fluid moving at velocity v_i. Thus, signal amplitude can be determined for a binned value of velocity to obtain a velocity distribution. The velocity distribution may be obtained via any number of inversion methods known in the art.

[0016] FIG. 4 shows an exemplary velocity distribution 400 relating signal amplitude to velocity for a response signal such as the exemplary response signal of FIG. 3. As an example, FIG. 4 may be a relation between amplitude and velocity for an H^1 response signal. A first peak 401 may represent H^1 nuclei traveling at a first speed. A second peak 403 may represent H^1 nuclei traveling at a second speed. The first and second speeds may be due to flow velocities of different phases, i.e., water and hydrocarbon phases. A flow rate for a particular phase may be estimated using mean velocities obtained from the exemplary velocity distribution such as shown in FIG. 4 and volume fractions obtained from one or more exemplary calibration

methods.

[0017] In one embodiment, a first NMR excitation pulse is applied to the fluid to excite a first set of nuclei and a first signal is obtained from the first set of nuclei in response to the first excitation pulse. A second NMR excitation pulse is applied to the fluid to excite a second set of nuclei and a second signal is obtained from the second set of nuclei in response to the second excitation pulse. The two signals obtained from the fluid may be used to estimate a flow rate of one or more phases of the fluid, as discussed below.

[0018] A flow rate F_h of a hydrocarbon phase flowing through a pipe is given by:

$$F_h = f_h \cdot \bar{v}_h \cdot S \qquad \text{Eq. (3)}$$

where f_h is a volume fraction of the hydrocarbon phase at a specific time, v_h is an average velocity of the hydrocarbon phase and S is a cross-sectional area of the pipe. A value of f_h may be determined using various methods. In one embodiment, f_h may be determined from a comparison of a C^{13} NMR response signal from the fluid to a C^{13} NMR signal for a calibrated flow of a hydrocarbon phase in a pipe section having the same configuration as the fluid in the detection pipe section 112.

[0019] A total flow rate of a multiphase fluid may be given by:

$$F_T = f_T \cdot \bar{v}_T \cdot S = H_{I,h} F_h + F_W \qquad \text{Eq. (4)}$$

where F_T is the flow rate of the total fluid, F_W is a flow rate of the water phase, f_T is a volume fraction, v_T is an average flow velocity of the total fluid as determined from H^1 NMR measurements, and $H_{I,h}$ is a hydrogen index of the hydrocarbon phase. Volume fraction f_T may be determined from a comparison of an H^1 NMR signal intensity divided by a signal intensity of a water-filled pipe under the same configuration as fluid in the detection pipe section 112. Average flow velocity v_T may be determined from H^1 NMR measurements. The ratio of F_W over F_h+F_W provides a water cut of the fluid:

$$S_W = \frac{F_W}{F_h + F_W} \qquad \text{Eq. (5)}$$

[0020] A cross-sectional area (i.e., pipe radius) of the detection pipe section 112 may be selected to provide a particular flow velocity. For low velocity flows (i.e., significantly smaller than 1 m/s), the pipe cross-sectional area may be reduced to increase the flow speed and thereby reduce the effects of signal decay on the overall signal. When flow rate varies significantly, a pulsed field gradient module may be added to the NMR instrument to accommodate both high and low flow velocities. At low speed flow, the pulsed field gradient may be used to encode phase changes caused by the flow.

[0021] FIG. 5 shows a flowchart 500 of an exemplary method of the present disclosure for obtaining a flow rate of a fluid phase. In Box 502, a first velocity distribution is obtained for a first set of nuclei in the fluid. In Box 504, a second velocity distribution is obtained for a second set of nuclei in the fluid. In Box 506, a velocity for a phase of the fluid is determined using the

first velocity distribution and the second velocity distribution. In Box 508, a flow rate of the phase is estimated using the determined velocity and a determined volume fraction of the phase.

[0022] While the foregoing disclosure is directed to the exemplary embodiments of the disclosure, various modifications within the scope of the appended claims will be apparent to those skilled in the art.

REFERENCES CITED IN THE DESCRIPTION

This list of references cited by the applicant is for the reader's convenience only. It does not form part of the European patent document. Even though great care has been taken in compiling the references, errors or omissions cannot be excluded and the EPO disclaims all liability in this regard.

Patent documents cited in the description

- US6046587A [0001]

Patentkrav

1. Fremgangsmåde til estimering af en gennemstrømningsrate i et rør af faser af en multifasefluid, der indbefatter en carbonhydridfase og en vandfase, med et kernemagnetisk resonans (NMR)-spektrometer, omfattende:
opnåelse af en første hastighedsfordeling af amplituder fra et første sæt af kerner i multifasefluiden fra et NMR-signal modtaget fra multifasefluiden som reaktion på et ^{1}H-NMR-exciteringssignal;
opnåelse af en anden hastighedsfordeling af amplituder fra et andet sæt af kerner i multifasefluiden fra et NMR-signal modtaget fra multifasefluiden som reaktion på et ^{13}C-NMR-exciteringssignal;
bestemmelse af en volumenbrøk og en gennemsnitshastighed af multifasefluiden under anvendelse af de ud fra første hastighedsfordeling opnåede amplituder;
bestemmelse af en total gennemstrømningsrate af multifasefluiden ud fra volumenbrøken og gennemsnitshastigheden af multifasefluiden;
bestemmelse af en volumenbrøk og en gennemsnitshastighed af carbonhydridfasen under anvendelse af en ud fra den anden hastighedsfordeling opnået amplitude;
bestemmelse af en gennemstrømningsrate af carbonhydridfasen ud fra volumenbrøken og gennemsnitshastigheden af carbonhydridfasen; og estimering af gennemstrømningsraten af vandfasen ud fra en forskel mellem den samlede gennemstrømningsrate og gennemstrømningsraten af carbonhydridfasen.

2. Fremgangsmåde ifølge krav 1, hvor opnåelse af hver hastighedsfordeling yderligere omfatter udførelse af en invertering af det relaterede NMR-signal.

3. Fremgangsmåde ifølge krav 1, hvor multifasefluiden opnås fra et produktionssystem.

4. Fremgangsmåde ifølge krav 1, hvor estimering af volumenbrøken af carbonhydridfasen yderligere omfatter sammenligning af en amplitude af det opnåede NMR-signal med en tidligere bestemt signalamplitude fra en kalibreret gennemstrømning af en carbonhydridfase i en rørsektion med den samme udformning.

5. Fremgangsmåde ifølge krav 2, yderligere omfattende at justere det første og andet sæt af kerner langs en udvalgt retning i en første sektion af røret og opnåelse af NMR-signalet i en anden sektion af røret.

6. Fremgangsmåde ifølge krav 5, yderligere omfattende at reducere en gennemstrømningshastighed af fasen af fluiden i den første sektion af røret.

7. Fremgangsmåde ifølge krav 6, hvor reduktion af gennemstrømningshastigheden yderligere omfatter at øge radius af den første sektion af røret.

8. Indretning til estimering af en gennemstrømningsrate i et rør af faser af en multifasefluid, der indbefatter en carbonhydridfase og en vandfase, omfattende:

en transmitter (124), der er konfigureret til at tilvejebringe kernemagnetisk resonans (NMR)-exciteringer til multifasefluiden;

en modtager (122), der er konfigureret til at modtage signaler fra fluiden som reaktion på NMR-exciteringerne; og

en processor (130), der er konfigureret til:

at opnå en første hastighedsfordeling af amplituder fra et første sæt af kerner i multifasefluiden fra et NMR-signal modtaget fra multifasefluiden som reaktion på et ^{1}H-NMR-exciteringssignal;

at opnå en anden hastighedsfordeling af amplituder fra et andet sæt af kerner i multifasefluiden fra et NMR-signal modtaget fra multifasefluiden som reaktion på et ^{13}C-NMR-exciteringssignal;

at bestemme en volumenbrøk og en gennemsnitshastighed af multifasefluiden under anvendelse af de ud fra første hastighedsfordeling opnåede amplituder;

at bestemme en total gennemstrømningsrate af multifasefluiden ud fra volumenbrøken og gennemsnitshastigheden af multifasefluiden;

at bestemme en volumenbrøk og en gennemsnitshastighed af carbonhydridfasen under anvendelse af en ud fra den anden hastighedsfordeling opnået amplitude;

at bestemme en gennemstrømningsrate af carbonhydridfasen ud fra volumenbrøken og gennemsnitshastigheden af carbonhydridfasen; og

at estimere gennemstrømningsraten af vandfasen ud fra en forskel mellem den samlede gennemstrømningsrate og gennemstrømningsraten af carbonhydridfasen.

9. Indretning ifølge krav 8, hvor processoren yderligere er konfigureret til at opnå hver hastighedsfordeling ved at udføre en invertering af det tilsvarende relaterede reaktionssignal.

10. Indretning ifølge krav 8, hvor processoren yderligere er konfigureret til at estimere volumenbrøken af carbonhydridfasen ved at sammenligne en amplitude af det modtagne NMR-signal med en tidligere bestemt signalamplitude fra en kalibreret gennemstrømning af en carbonhydridfase i en rørsektion med den samme udformning.

11. Indretning ifølge krav 9, yderligere omfattende en polariseringsmagnet (104), der er konfigureret til at justere kerner langs en udvalgt retning i en første sektion af røret, og en spole, der er konfigureret til at modtage et NMR-reaktionssignal i en anden sektion af røret.

12. Indretning ifølge krav 11, hvor den første sektion af røret er konfigureret til at reducere en gennemstrømningshastighed af fluiden.

13. Indretning ifølge krav 12, hvor den første sektion af røret har en større radius end den anden sektion af røret.

DRAWINGS

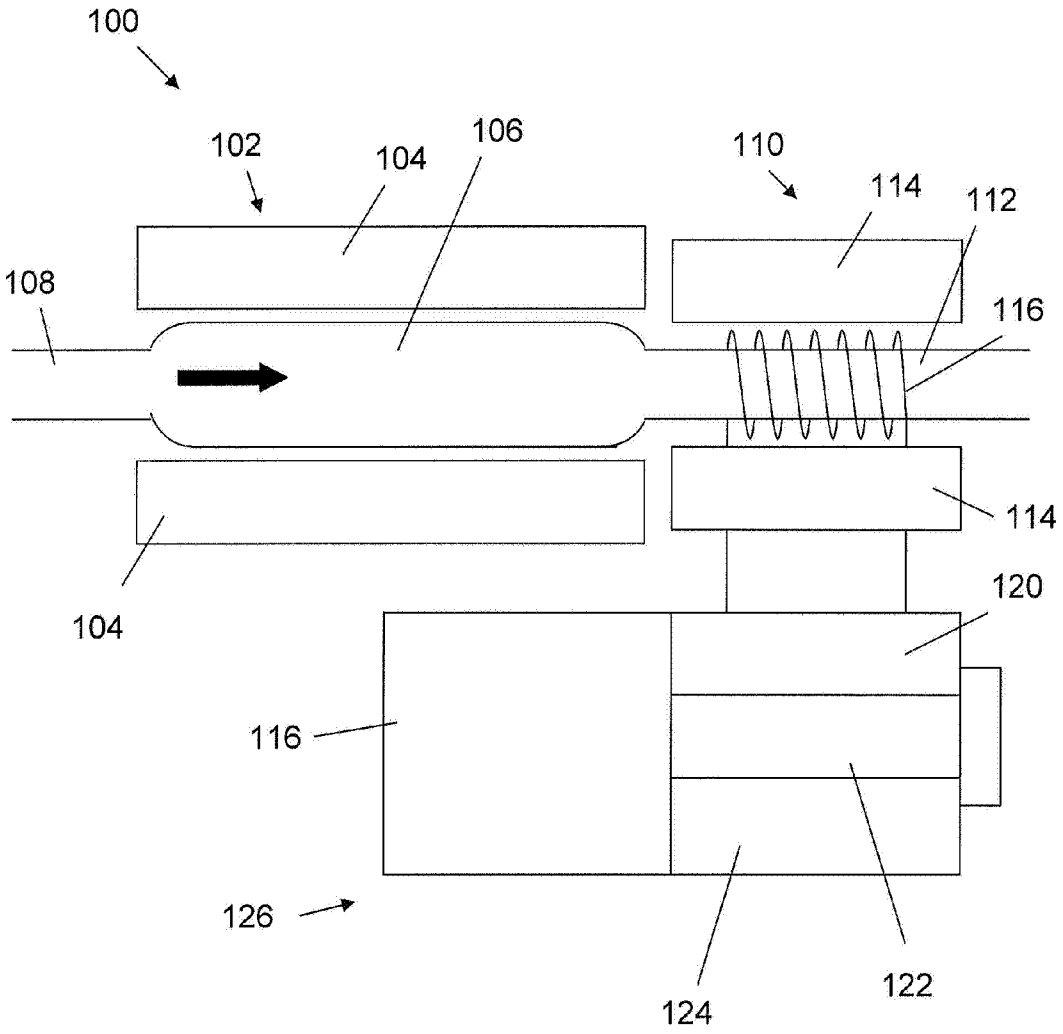

FIG. 1

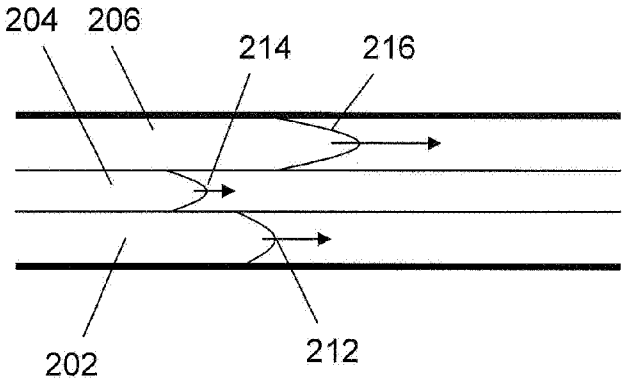

FIG. 2A

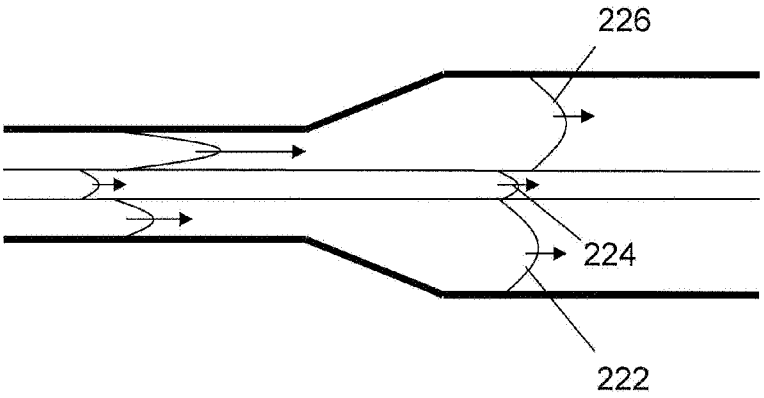

FIG. 2B

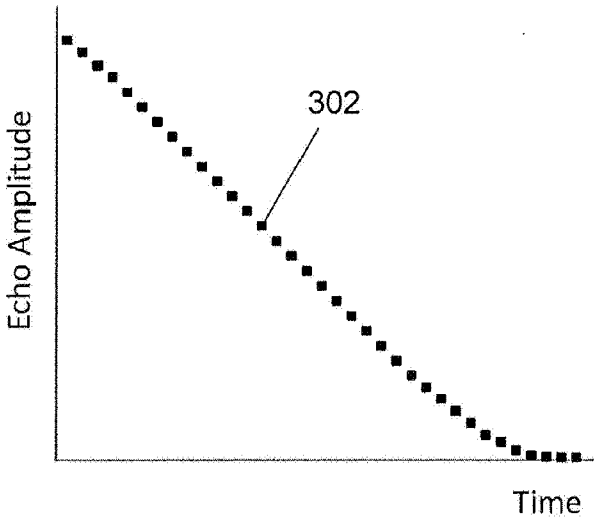

FIG. 3

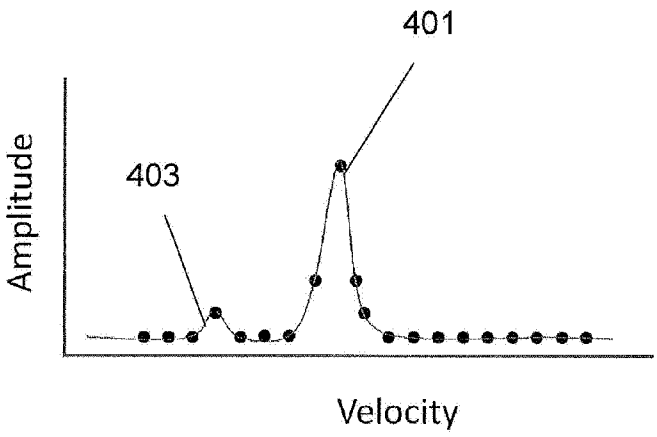

FIG. 4

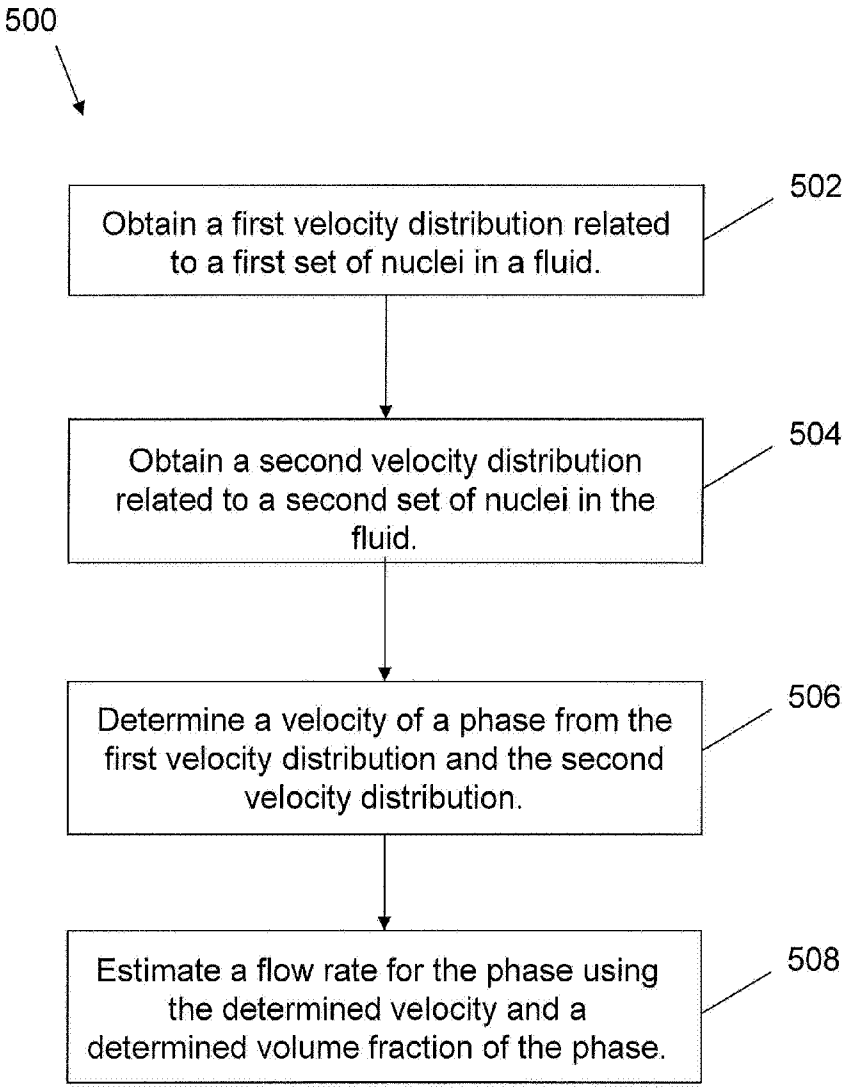
500
Obtain a first velocity distribution related to a first set of nuclei in a fluid.
502
Obtain a second velocity distribution related to a second set of nuclei in the fluid.
504
Determine a velocity of a phase from the first velocity distribution and the second velocity distribution.
506
Estimate a flow rate for the phase using the determined velocity and a determined volume fraction of the phase.
508

FIG. 5