Nov. 20, 1934. J. A. ZAREKO 1,981,211

SKATE

Filed Aug. 25, 1931 2 Sheets-Sheet 1

Fig. 1.

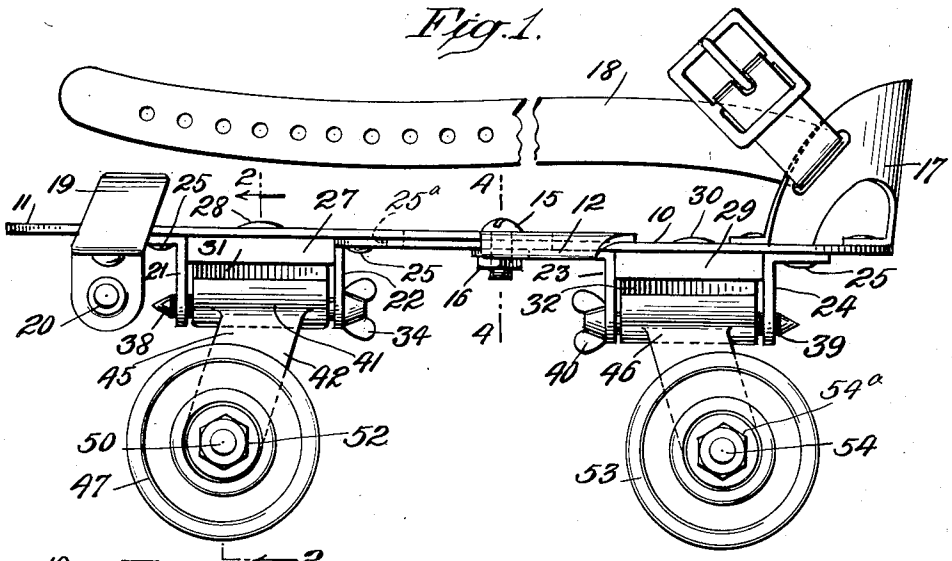

Fig. 2.

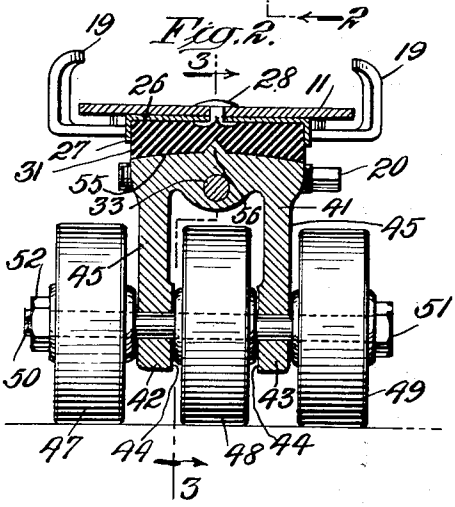

Fig. 5.

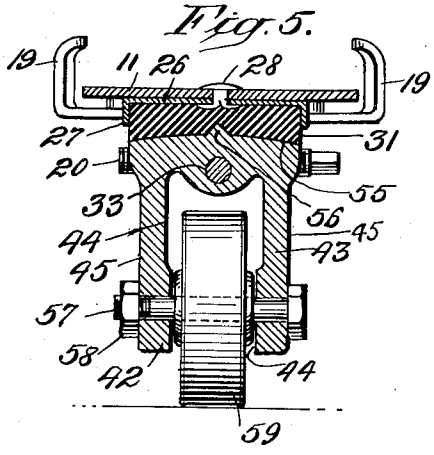

Fig. 3.

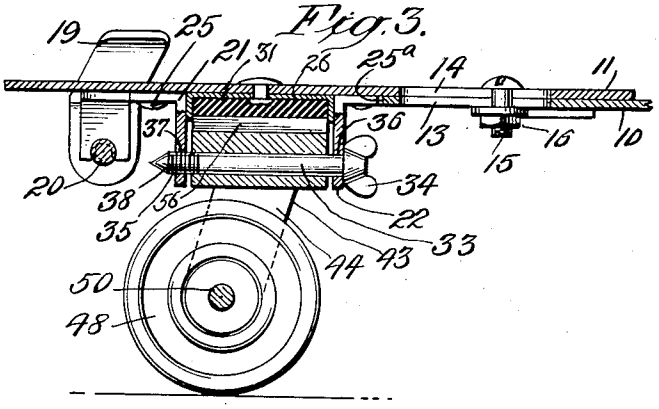

Fig. 4.

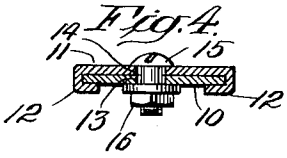

INVENTOR
JOHN A. ZAREKO
BY Geo. L. Wheelock
ATTORNEY

Nov. 20, 1934. J. A. ZAREKO 1,981,211

SKATE

Filed Aug. 25, 1931 2 Sheets-Sheet 2

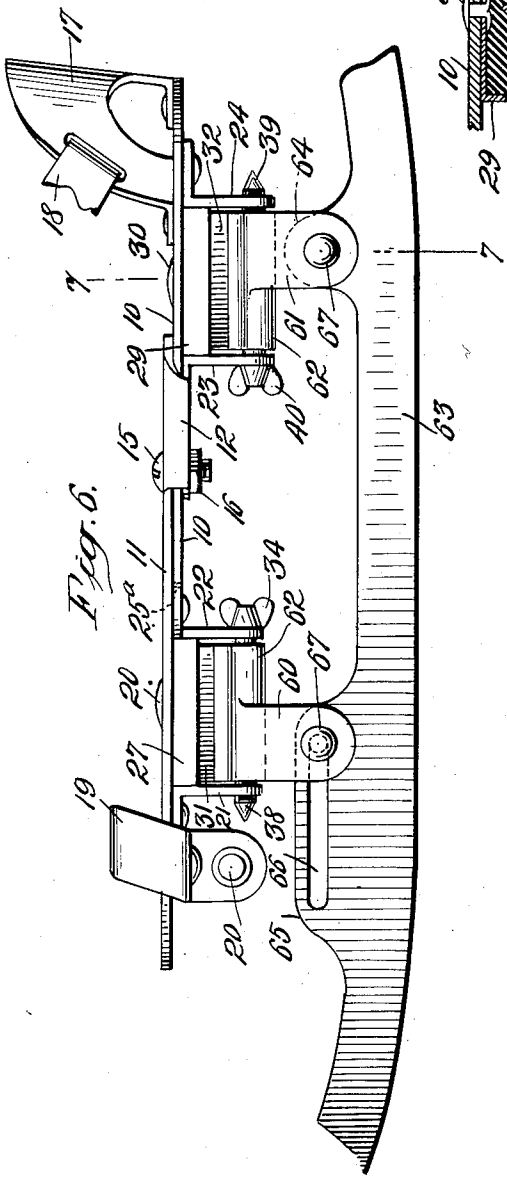

Fig. 6.

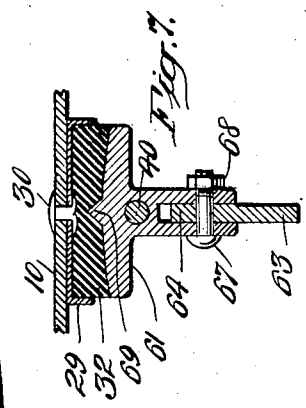

Fig. 7.

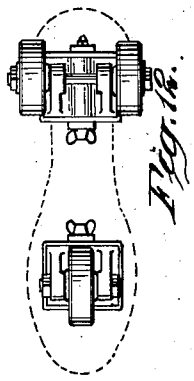

Fig. 12.

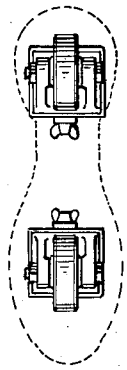

Fig. 10.

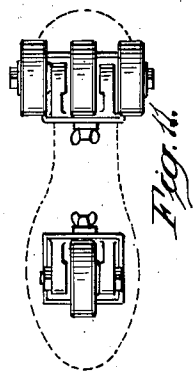

Fig. 11.

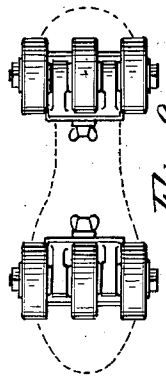

Fig. 8.

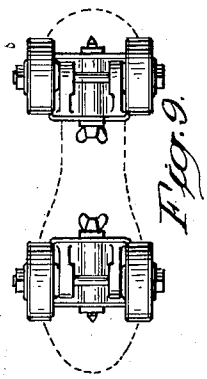

Fig. 9.

INVENTOR
JOHN A. ZAREKO
BY Geo. S. Wheelock
ATTORNEY

Patented Nov. 20, 1934 1,981,211

UNITED STATES PATENT OFFICE

1,981,211

SKATE

John A. Zareko, Brooklyn, N. Y.

Application August 25, 1931, Serial No. 559,223

5 Claims. (Cl. 208—179)

This invention relates to skates which may be used solely as a roller skate or solely as an ice skate and may be termed a combination skate, permitting various combinations to be made.

One of the objects of the present invention is to provide a skate whereby various combinations of rollers may be made, for the purpose of enabling the same to be used as an ordinary roller skate or to be used for performing various stunts, as on the stage, for example.

Another object of the invention is to so construct and assemble the foot attached parts that either rollers or an ice runner may be supported interchangeably on the main supporting parts of the skate, so that the same is convertible into either a roller or an ice skate.

A further object of the invention is to provide yokes which support the surface contact means of the skate, and which yokes may have a rocking action during the use of the skate.

A still further object of the invention is to provide resilient cushioning means for the yokes during their rocking action, for the purpose also of automatically restoring the lateral faces of the surface contact means of the skate in a normal position at right angles to the foot plate of the skate.

Other objects of the invention are to provide a skate, which possesses some or all of the advantages of the present invention, and which is at the same time comparatively simple and is efficient in service.

These being among the objects of the present invention, the same consists of certain features of construction and combinations of parts to be hereinafter described and then claimed with reference to the accompanying drawings illustrating preferred embodiments of the invention and wherein

Figure 1 is a side elevation showing the invention embodied in a roller skate;

Fig. 2 is a vertical transverse section on the line 2—2, Fig. 1, showing three rollers;

Fig. 3 is a longitudinal vertical section of the forward portion of the roller skate on the line 3—3, Fig. 2;

Fig. 4 is a transverse section on the line 4—4, Fig. 1, to illustrate means for adjusting the length of the foot plate;

Fig. 5 is a similar section to Fig. 2, except that it illustrates the use of a single roller at the front of the skate;

Fig. 6 is a side elevation of the main parts of the skate shown in Fig. 1, illustrating an ice runner mounted on the same;

Fig. 7 is a transverse section on the line 7—7, Fig. 6;

Fig. 8 is a diagrammatic view illustrating the use of three rollers at each end of the skate;

Fig. 9 is a diagrammatic view illustrating the use of two rollers at each end of the skate;

Fig. 10 is a diagrammatic view ilustrating the use of one roller at each end of the skate;

Fig. 11 is a diagrammatic view illustrating the use of a single roller at the front of the skate and three rollers at the rear end; and

Fig. 12 is a diagrammatic view illustrating the use of a single roller at the front of the skate and two rollers at the back.

Referring to Figures 1 to 4 inclusive, the foot plate is shown as preferably including two separate sections, namely, a heel section or plate member 10 and a forward section or plate member 11 for the ball of the foot. The side edges of the rear end of the forward section 11 are provided with down and inturned parallel flanges 12, more particularly shown in Fig. 4, which provide mutually facing grooves for receiving and guiding the side edges of the forward part of the heel section 10. The heel section 10 has a snug fit in the grooves of the flanges 12, but the fit is loose enough to permit of the adjustment of the sections 10, 11 relatively to each other.

The heel section is provided with a longitudinal slot 13 and the forward section is provided with a longitudinal slot 14, these slots being located in appropriate position so that they will register with each other. A screw 15 having its head resting upon the forward section 11 passes downwardly through the slots 13, 14 and has a nut 16 screwed upon it and located beneath the foot plate. If adjustment of the lengths of the foot plate is desired, the nut 16 is loosened, the sections 10, 11 adjusted and the nut again set up. Of course, the foot plate may for certain purposes be made in one piece and non-adjustable in length.

An upwardly extending heel plate 17 is provided and also a strap 18. Also toe clamps 19 are provided, these being adjusted by means of an adjusting screw 20. Other means for securing the skate to the foot of the user may of course be provided.

Angular brackets 21, 22, 23 and 24 are preferably provided, so that there is a pair 21, 22 of the brackets on the forward section and a pair 23, 24 on the rearward or heel section of the skate. The lower ends of these brackets extend downwardly from the foot plate and intersect the same in transverse planes, they extending in a series

longitudinally of the foot plate, as shown in Fig. 1. The upper ends of these brackets may be permanently secured to the underside of the foot plate by means of rivets 25 or by welding, if desired, the main parts of the skate being preferably of metal, except as hereinafter explained. If the foot plate is adjustable in length, it is preferred that the forward end of the heel section 10 be prolonged so as to pass the rivet 25 of bracket 22, and to provide a notch 25*a* in the forward edge so as to receive the upper end of said bracket, when the foot plate is adjusted for its shortest length.

At the underside of the forward section 11 there is located a plate 26 having a continuous flange 27 which extends downwardly, the plate 26 being permanently secured to the forward section 11 by means of a rivet 28 or by welding or otherwise. The plate 26 and its flange 27 provide a socket or formed seat for the purpose to be shortly explained. A similar socket or formed seat 29 is shown as attached permanently to the heel section 10 by means of a rivet 30. These sockets or formed seats preferably receive blocks 31, 32 of live rubber, but other elastic or spring elements of suitable material and construction may be substituted. These blocks of rubber are forced into the formed seats and retained in position by the flanges 27. They project downwardly a suitable distance below the formed seats.

A screw 33 is provided which has a long smooth stem, preferably to provide a pivot pin. At one end the screw or pin is provided with a thumb or finger engaging head 34 for turning it and at the other end with a screw thread 35, as shown clearly in Fig. 3. The pin 33 passes through aligned holes 36, 37 in the lower ends of the respective brackets 22, 21, the wall of the hole 36 being smooth and the wall of hole 37 in bracket 21 being threaded, for engagement by the thread 35 of the pin. This pin is for a purpose to be hereinafter explained. The screw threaded end of pin 33 is provided with a conical terminal portion 38, which facilitates entering the pin through the holes in the brackets. A similar screw or pin 39 extends through corresponding holes in the brackets 23, 24 of the heel section 10, the same having a head 40 for turning it.

Preferably the pins or screws 33 and 39 extend through the two pair of brackets in such way that the turning heads 34, 40 are between the two pair of brackets and their own brackets 22, 23, while the conical terminals thereof extend forwardly and rearwardly, away from the brackets. Hence there is a pair of corresponding pins 33, 39 extending in alignment longitudinally of the foot plate of the skate.

The construction of the skate as so far described is preferably maintained for use in making various skate combinations, of either roller or ice surface contact means.

A supporting yoke 41 is provided at the underside of the forward section 11 of the foot plate, the same having downward parallel arms 42, 43 constituting the fork of the yoke. The parallel inner surfaces 44 of the arms are flat and the parallel outer surfaces 45 are likewise flat. A supporting yoke 46 is also attached underneath the heel section 10 and the two yokes 41, 46 are similar, except that their arms are inclined in opposite direction, as shown in Fig. 1.

These yokes 41, 46 are located at their upper ends between the respective pairs of brackets 21, 22 and 23, 24, and they are secured to the respective pairs of brackets by means of the pins 33 and 39. The bridging or connecting top portion of each yoke is provided with a bearing hole which extends longitudinally of the skate and parallel with the foot-plate, and each pin 33, 39, passes through its corresponding hole and wholly underneath the elastic elements 31, 32, so that the yokes may rock on the pins without the pins being in contact with the elastic elements so as to tend to damage them or to get them out of position. Hence there will be one arm of each yoke located at each side of the pin which secures the yoke to its pair of brackets. It is preferred that the longitudinal pins 33, 39 constitute pivots for the yokes, although it is obvious that if the elastic members 31, 32 are dispensed with, the yokes may have a solid seat connection with the foot plates. As the yokes may be pivotally attached and confine the elastic blocks or the like 31, 32 between them and the foot plate, it is obvious that although the yokes are adapted to each rock as a whole to one side or the other, they are resiliently pressed with a tendency to urge them to a normal position with respect to the foot plate.

Referring to Figs. 1, 2 and 3, the invention is shown in connection with the employment of three front rollers or wheels 47, 48 and 49, it being assumed that there are two or three wheels underneath the heel portion of the skate. A pin or shaft 50 constituting a wheel axle is long enough to provide an axle for the three rollers 47, 48 and 49. The head 51 of the pin may have flat surfaces so that it is adapted to receive a wrench, and onto the screw threaded opposite end of the pin there may be screwed by means of a wrench a nut 52. At the rear end of the foot plate there is shown one of three rollers or wheels 53 and a similar pin 54 to pin 50, which may be held by a nut 54*a*. This pin 54 is also long enough so that it will provide for three or two rollers.

The pair of pins 50, 54 are led by their screw threaded ends through transverse holes in the lower ends of the arms of the yokes, after first positioning within, say yoke 41, the roller 48 and upon the pin 50 the roller 49. The pin 50 or 54, as the case may be, is then pushed through the yoke as far as it will go. Thereupon roller 47 or 53, as the case may be, is placed over the threaded end of each pin and the nuts 52, 54*a* are screwed onto the pins firmly enough to hold the rollers in parallel running position but yet loose enough so that they will turn when the skate is in use. It will be seen that the rollers have hubs with flat lateral surfaces which are parallel with the flat lateral surfaces of the yokes. Hence each roller is free to turn independently by reason of the special construction of the yokes. There is a transverse crowning or arching 55 of the upper surface of each yoke, and the elastic members 31, 32, are formed with complementary bearing surfaces. Each yoke is also provided preferably with a V-shaped rib or ridge 56 which extends parallel with the pin which secures the yoke in position and yet does not interfere with the rocking of the yoke on its resilient member. The object of the rib or ridge 56 which is located midway of the sides of the yoke and fits into a complementary groove in the elastic member is to more reliably assure the keeping of the yoke in a more or less normal position relative to its side movements due to a rocking action. It will be furthermore seen that when elastic blocks 31, 32 are employed, such ridges or ribs as 56 serve to retain the same within their formed seats, such as 26, 27, preventing a lateral dislocation of the

elastic block when it becomes so much worn that there is danger of its lateral dislocation. The corresponding portions in association with the rear supporting yoke 46 do not need to be specifically shown. The surface 55 may be concave if desired instead of convex.

Referring to Fig. 5 a pin or axle 57 is shown which is shorter than the pair of long pins 50, 54. Obviously there will be a pair of the short pins 57, their purpose being to retain within the yoke a single roller or wheel 59 by means of a nut 58 screwed onto it. Hence the yokes 41 and 46 are adapted to receive interchangeably the pair of pins or axles 50, 54, and the shorter pair of pins, such as 57. Thereby various combinations of rollers or wheels for the same skate may be provided inasmuch as the desired changes may be wrought without removing the yokes from the skate.

Some of the possible roller or wheel combinations are disclosed in Figs. 8 to 12 inclusive. In Fig. 8 there is disclosed a combination of three rollers at each end of the skate. In Fig. 9 there is disclosed a combination of two rollers or wheels at each end of the skate, by omitting the intermediate rollers. In both of Figs. 8 and 9 the long pair of pins or axles 50, 54, shown in Figs. 1 and 2, are employed. In Fig. 10 a single roller or wheel is shown at each end of the skate, these being supported upon the shorter pins or axles, such as 57, shown in Fig. 5. In this case the wheels or rollers are mounted within the yokes. In Fig. 11 a still different combination of rollers or wheels is shown, where there is one roller at the front of the skate and three rollers at the rear end, and in Fig. 12 the intermediate roller shown in Fig. 11 is omitted, so that the skate has three rollers. Other combinations of the rollers or wheels can obviously be made, by the use of the pairs of pins or axles of relatively different length.

In Figs. 6 and 7 an ice skate is illustrated, and the parts which are in common with similar parts in the other figures and which do not require substitution or interchanging, bear the same reference numerals. In this case yokes 60 and 61 are substituted for the yokes which hold the rollers or wheels. Each of these yokes has an elongated sleeve 62, the sleeves extending toward each other. The yokes here shown are preferably different from the yokes shown in the other figures because it is desirable to specially form the same for the mounting of an ice runner 63 thereon. Runner 63 is provided at its rear end with an upwardly extending perforated lug 64 and at its forward end there is an upward longer lug 65. The runner is rigidly fixed in position by passing screws 67 through the lugs and through perforations in the arms of the yokes 60, 61. The pins 67 or screws are rigidly held by means of nuts, such as 68. The upper surface of each of the yokes may be crowned or arched, as previously stated, and be provided with a rib or ridge 69. The forward pin or screw 67 passes through the longitudinal slot 66, whereby the adjustment of the length of the foot plate may be permitted, if desired.

The runner unit comprises the runner 63 and the yokes 60 and 61, which may be interchanged for the yokes and rollers, by releasing the pins 33, 40 from the longitudinal series of brackets 21, 22, 23 and 24, and then using the same pins 33, 40 for attaching the yokes 60, 61 to the brackets. If it is not desired to resiliently bear upon the yokes 60, 61 so that the runner 63 may slightly rock, the elastic blocks 31, 32 are omitted and the yokes 60, 61 made high enough, with flat tops, so that they will seat within the formed seats at the bottom of the foot plate, thereby making the runner rigid with the foot plate. If the foot plate is made non-adjustable, then of course a runner is employed which is not adjustably connected with either of its supporting yokes.

Obviously the invention is susceptible of a wide range of modification as parts may be omitted, added or substituted without departing from the spirit of the invention as defined in the appended claims.

What I claim as new, is—

1. In a skate, the combination of a foot-plate, a pair of spaced brackets rigidly fixed to each end of the bottom of the plate, the brackets extending in a series longitudinally of the plate, yokes having pivotal connection with the brackets, longitudinal of the plate, and their arms extending downwardly below the brackets, a socket member rigidly fixed to the plate within each pair of brackets, elastic means within the socket members, and between the plate and the yokes and on which the yokes bear, each elastic means extending in one piece over the pivot, and rollers mounted on the yokes.

2. In a skate, the combination of a foot-plate, a pair of spaced brackets rigidly fixed to each end of the bottom of the plate, the brackets extending in a series longitudinally of the plate, yokes having pivotal connection with the brackets, longitudinal of the plate, and their arms extending downwardly below the brackets, and elastic means between the plate and the yokes and on which the yokes bear, the bearing surfaces of the yokes being arched and crowned, the elastic means being complementarily arched, and surface contact means for the skate mounted on the yokes.

3. In a skate, the combination of a foot-plate, yokes pivotally mounted on the bottom of the plate to rock sidewise of the plate, the pivots extending longitudinally of the plate, between the arms of the yokes, elastic blocks between the yokes and plates, the pivots being below the blocks, and removed from contact therewith and rollers mounted on the arms of the yokes.

4. In a skate, the combination of a foot-plate, yokes pivotally mounted on the bottom of the plate to rock sidewise of the plate, the pivots extending longitudinally of the plate, between the arms of the yokes, elastic blocks between the yokes and plate, the pivots being below the blocks, ribs on top of the yokes and extending parallel with the pivots, the ribs embedding in the blocks and bearing on the bottom surfaces thereof, and surface contact means for the skate mounted on the arms of the yokes.

5. In a skate, the combination of a foot-plate, a pair of spaced brackets rigidly fixed to each end of the bottom of the plate, the brackets extending in a series longitudinally of the plate, a formed seat member secured to the bottom of the plate, within each pair of brackets, each bracket extending downwardly below each seat member, yokes having downwardly extending arms, cushioning means for seating the yokes upon the seats, longitudinal pins securing the yokes to the brackets at points entirely below the seats, and surface contact means for the skate, carried by the arms.

JOHN A. ZAREKO.