(No Model.) 2 Sheets—Sheet 1.

F. J. ROTH & C. A. BERTSCH.

SHEARING MACHINE.

No. 590,049. Patented Sept. 14, 1897.

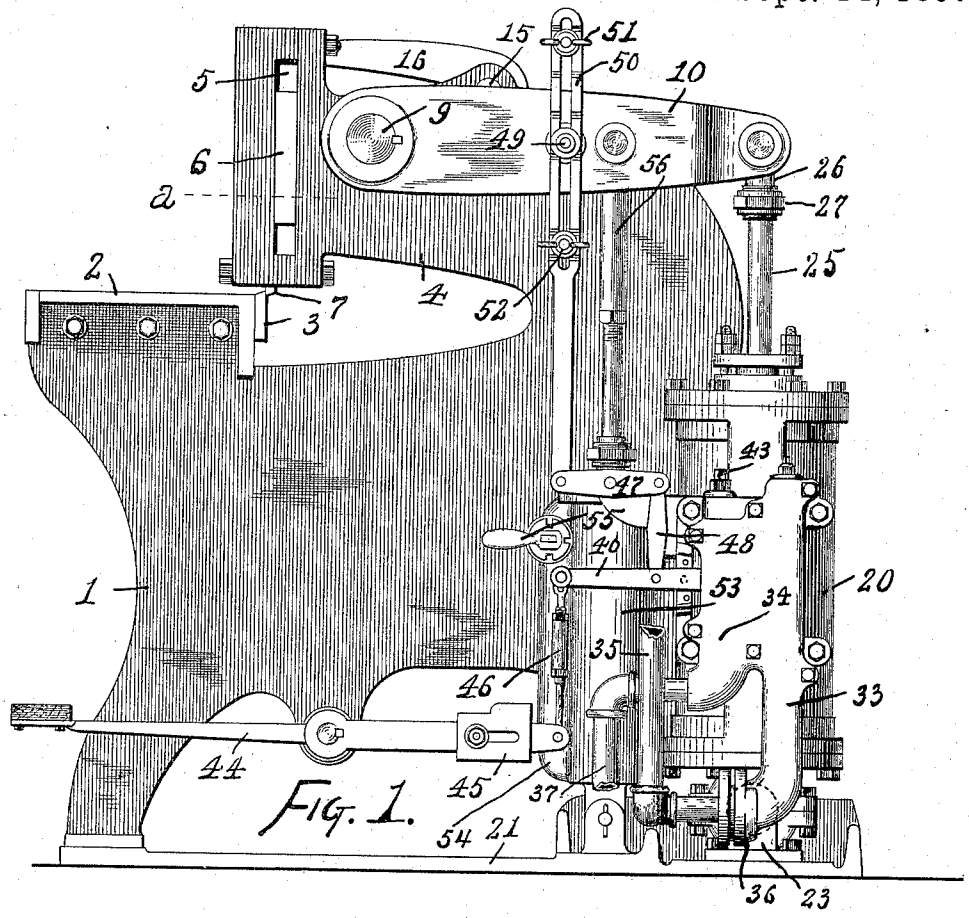

FIG. 1.

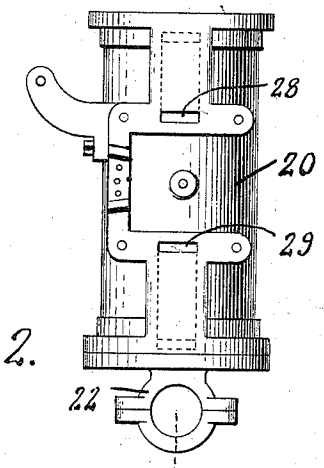

FIG. 2.

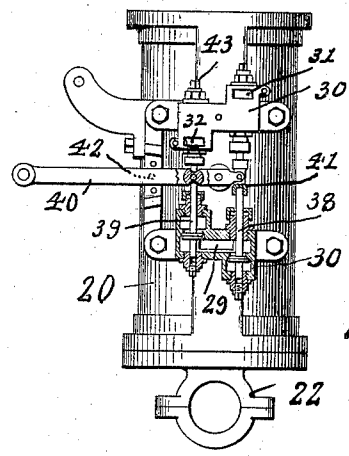

FIG. 3.

Witnesses:
E. R. Shipley.
M. S. Belden.

Frank J. Roth
Charles A. Bertsch
Inventors

by James W. See Attorney

THE NORRIS PETERS CO., PHOTO-LITHO., WASHINGTON, D. C.

(No Model.) 2 Sheets—Sheet 2.

F. J. ROTH & C. A. BERTSCH.

SHEARING MACHINE.

No. 590,049. Patented Sept. 14, 1897.

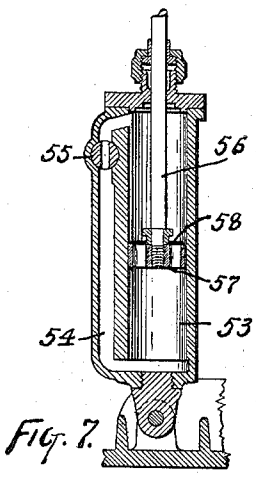

FIG. 7.

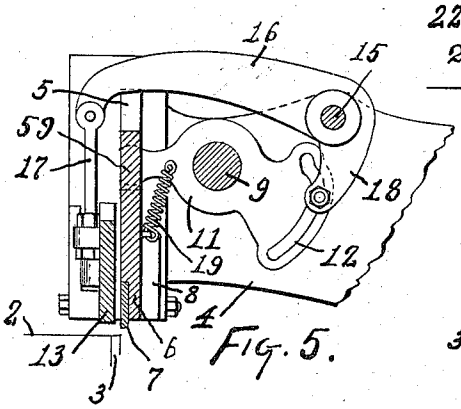

FIG. 5.

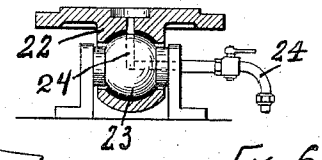

FIG. 6.

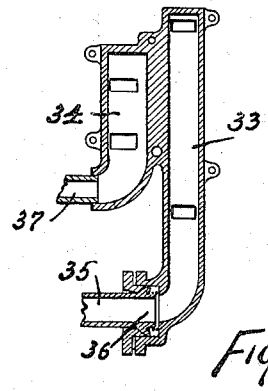

FIG. 8.

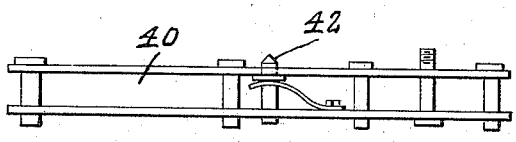

FIG. 9.

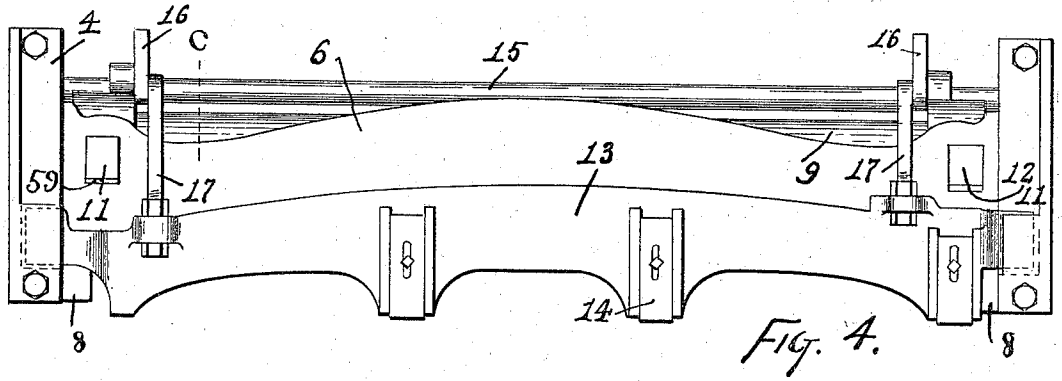

FIG. 4.

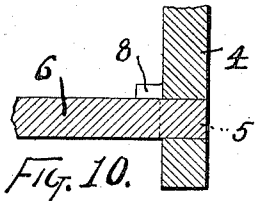

FIG. 10.

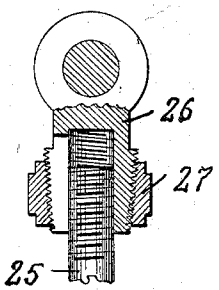

FIG. 11.

Witnesses:
E. R. Shipley.
M. S. Belden.

Frank J. Roth
Charles A. Bertsch
Inventors
by James W. See
Attorney

THE NORRIS PETERS CO., PHOTO-LITHO., WASHINGTON, D. C.

UNITED STATES PATENT OFFICE.

FRANK J. ROTH, OF CINCINNATI, OHIO, AND CHARLES A. BERTSCH, OF CAMBRIDGE CITY, INDIANA; SAID ROTH ASSIGNOR TO SAID BERTSCH.

SHEARING-MACHINE.

SPECIFICATION forming part of Letters Patent No. 590,049, dated September 14, 1897.

Application filed July 29, 1895. Renewed March 1, 1897. Serial No. 625,620. (No model.)

To all whom it may concern:

Be it known that we, FRANK J. ROTH, of Cincinnati, Hamilton county, Ohio, and CHARLES A. BERTSCH, of Cambridge City, Wayne county, Indiana, have invented certain new and useful Improvements in Shearing-Machines, of which the following is a specification.

This invention relates to machines of the gate type for shearing metal, and the improvements will be readily understood from the following description, taken in connection with the accompanying drawings, in which—

Figure 1 is a side elevation of a machine embodying our invention; Fig. 2, a side elevation of the motor-cylinder; Fig. 3, a side elevation of the motor-cylinder with valve-chests and valve-lever attached, the lower valve-chest appearing in vertical section; Fig. 4, a front elevation of the gate, holddown-bar, &c.; Fig. 5, a vertical section of the gate, &c., in the plane of line *c* of Fig. 4; Fig. 6, a vertical section at the base of the motor-cylinder in the plane of line *b* of Fig. 2; Fig. 7, a vertical section of the cataract-cylinder; Fig. 8, a vertical section of the supply and exhaust pipe; Fig. 9, a plan of the valve-lever; Fig. 10, a horizontal section of the gate and one of its guides in the plane of line *a* of Fig. 1, and Fig. 11 a vertical section of the coupling uniting the motor piston-rod to the power-arm.

In the drawings, having principal reference to Fig. 1, 1 indicates the usual housings of a gate shearing-machine; 2, the table; 3, the lower shear-blade; 4, the top jaws of the housing; 5, the usual guide-slots in these jaws for the end of the gate; 6, the gate, with its ends sliding in slots 5, the gate, as usual, having its lower edge lower than the base of slots 5, the depth of slots 5 being limited by the necessity for passing sheets below the top jaws of the machine; 7, the upper shear-blade, secured to the gate; 8, guide-blocks formed upon the inner surfaces of top jaws 4 of the housings and bearing against the rear face of the gate below the base of slots 5, whereby a support is secured at the rear of the gate at the lowest possible points; 9, a rock-shaft mounted in the housings to the rear of the gate; 10, a power-arm secured to one end of this shaft; 11, arms fast on shaft 9, one near each end of the gate and projecting forward into knuckle engagement in slots in the gate; 12, a cam-arm fast on shaft 9 and shown as being formed integral with one of arms 11; 13, a holddown-bar in front of the gate and having its ends engaging suitable vertical guides in the housings; 14, adjustable pressure-blocks carried by the holddown-bar; 15, a shaft mounted in the housing parallel with rock-shaft 9; 16, arms fast on shaft 15 and projecting forward over the gate; 17, adjustable connecting-rods connecting arms 16 with the holddown-bar 13; 18, an arm fast on shaft 15 and having a pin or roller engaging cam-arm 12, arm 18 being shown as integral with one of arms 16, the construction being obviously such that as rock-shaft 9 begins to depress the gate it will first depress the holddown-bar and then hold the bar in depressed position, thus clamping the sheet to be sheared; 19, springs attached to arms 11 and to the gate below the arms, the upper end of these springs being preferably inclined rearwardly, these springs serving to prevent lost motion between arms 11 and the gate and also serving to exert a degree of lifting force upon the gate by reason of the fact that as the gate descends the springs resistingly increase in length; 20, a motor-cylinder disposed vertically under the rear end of power-arm 10; 21, a sole-plate below the cylinder; 22, a bearing at the lower end of the cylinder with its axis parallel with shaft 9; 23, a journal secured to the sole-plate and engaged by bearing 22, whereby the cylinder is permitted to oscillate; 24, a drain-channel having a cock and extending from the lower end of the motor-cylinder into journal 23 and out thereof and serving to drain the cylinder, as seen in Fig. 6; 25, the motor piston-rod; 26, (see Fig. 11,) the coupling uniting this piston-rod to power-arm 10, this coupling being threaded upon the piston-rod and being split and having its exterior tapered and threaded; 27, a nut screwing on the tapered part of coupling 26 and serving to clamp the piston-rod in the coupling after adjustment for length of piston-rod; 28, (see Fig. 2,) a port leading to the upper end of the motor-cylin-

der; 29, a port leading to the lower end of the motor-cylinder; 30, valve-chests bolted to the motor-cylinder and each having a port registering with its appropriate cylinder-port; 31, a port in the outer face of each of the valve-chests for the admission of the pressure fluid or liquid; 32, similar ports in the valve-chests for the exhaust; 33, a pipe bolted against the outer face of the valve-chests and having ports communicating with ports 31; 34, a similar pipe having ports communicating with ports 32, the combined structure 33 34 forming in one casting a supply-pipe and exhaust-pipe connecting with the valve-chests; 35, the supply connecting-pipe communicating with supply-pipe 33; 36, a swiveled joint connecting pipes 35 and 33, the axis of bearing 22 of the motor-cylinder intersecting the center of this swiveled joint, so that the cylinder may oscillate without being interfered with by pipe 35; 37, the exhaust connection connecting with pipe 34 and adapted to receive a hose or other flexible connecting-pipe which will not interfere with the oscillations of the cylinder; 38, admission-valves, being puppet-valves in the valve-chests and controlling the flow from ports 31 to the cylinder-ports 28 and 29; 39, similar valves in the valve-chests controlling the flow from cylinder-ports 28 and 29 to the exhaust-ports 32; 40, a lever pivoted to the cylinder on a pivot disposed midway between the vertical planes of the exhaust-valves 39 and supply-valves 38; 41, sockets engaging the stems of the valves loosely and swiveled in valve-lever 40, so that if valve-lever 40 be raised one supply-valve will be opened, the exhaust-valve for the other end of the cylinder being simultaneously opened; 42, a spring-detent carried by valve-lever 40 and engaging a detent-socket when the valve-lever is in mid-position with all the valves closed, similar detent-sockets being preferably provided to be engaged by the detent at each extreme of throw of valve-lever 40, the throw of the lever being limited by rigid stops, detent 42 serving mainly to give support to the valve-lever to prevent accidental movement; 43, plugs threaded into the valve-chests at the ends of the valve-stems and serving to limit the opening motion of the valves, the lower ones serving also as drain and cleaning devices; 44, a treadle; 45, a weight, for which a spring may be substituted, depressing the rear end of the treadle; 46, an adjustable link connecting the rear end of the treadle with the front end of valve-lever 40; 47, a lever pivoted on a bracket projecting from the motor-cylinder; 48, a link connecting valve-lever 40 with the rear end of lever 47; 49, a stud carried by power-arm 10; 50, a slotted rod engaging stud 49 and pivoted at its lower end to lever 47; 51, an adjustable stop in the slot of rod 50 above stud 49; 52, a similar stop below the stud; 53, Fig. 7, a cataract-cylinder having its lower end pivoted to sole-plate 21, so that it may oscillate; 54, the side pipe of this cylinder; 55, a regulating-valve in this side pipe; 56, a cataract piston-rod connected with power-arm 10; 57, a cataract-piston having ports through it; 58, a valve over the ports in this piston and opening on the descent of the piston, and 59, Figs. 4 and 5, blocks below the knuckles of arms 11 and engaging the floors of the slots in the gate in which those knuckles work.

If treadle 44 be depressed, fluid will be admitted below the motor-piston and exhaust from above the piston and power-arm 10 will rise and the gate make its downward shearing stroke. As the power-arm rises its movement is resisted to some extent by the piston of the cataract-cylinder, which cylinder is to be filled with liquid. Valve 55 is to be adjusted to permit the movement to take place at proper or reasonably-limited working speed. The cataract-cylinder will effectively resist any material excess of machine motion over that adjusted for and will thus prevent the jumping of the machine when the working strain suddenly ceases or when the machine is doing no shearing.

Power-arm 10 having made its working-up stroke, stud 49 strikes stop 51 at time determined by adjustment, and valve-lever 40 becomes depressed, thus reversing the action of the power-cylinder and producing the upstroke of the gate, stop 52 again reversing the motion to make the next downstroke of the gate, or the valve motions may be controlled by the treadle, the foot raising valve-lever 40 by pressure on the treadle and weight 45 depressing the valve-lever when the foot-pressure is relieved. Stops 51 and 52 are preferably held in serrations or notches in rod 50 to prevent slipping and determine definitely the length of motor-stroke.

The automatic valve movement may take place while the foot is on the treadle, and it is preferable that the upper end of link 46 be slotted, as indicated in Fig. 1, so that the automatic movement will not transmit too severe shocks to the foot.

The shearing work is done upon the upstroke of the motor-piston, and the downstroke of the motor-piston may require but little steam, or even none at all if power-arm 10 or other balancing parts be heavy enough. Sockets 41 may have their depth adjusted in construction so that valve-lever 40 may have a lessened or zero effect on the valves pertaining to the upper ends of the motor-cylinder.

While cataract-piston 57 firmly resists excessive speed in an upward direction, representing the cutting direction, its valve 58 suppresses the resistance on the downstroke of the piston by permitting the liquid to be freely passed through by the piston. Neither the cataract-piston nor its valves need accurate fitting, and with a piston of proper looseness of fit, to permit certain leakage, the side pipe 54 and valve 55 may be dispensed with.

We claim as our invention—

1. In a shearing-machine, the combination,

substantially as set forth, of a gate, a rock-shaft having arms engaging the gate, a cam-arm on the opposite side of the rock-shaft, a shaft parallel with the rock-shaft, a holddown-bar, arms on said second shaft and connected with the holddown-bar, and an arm on said second shaft engaging said cam-arm.

2. In a shearing-machine, the combination with a slotted gate, holddown-bar and rock-shaft, of arms and cams carried by the rock-shaft, mechanism connecting the cams and holddown-bar, knuckles upon the ends of the arms and engaging the slots in the gate, blocks within the slots and springs connected at their opposite ends to the arms and gate, designed to compensate for lost motion and to exert a lifting force upon the gate, substantially as specified.

3. In a shearing-machine, the combination with a gate, rock-shaft and connecting mechanism, of an arm upon the rock-shaft and an oscillating power-cylinder and an oscillating cataract-cylinder having their axes parallel and their pistons connected to the arm upon the same side of the rock-shaft.

4. In a shearing-machine the combination with a gate, rock-shaft and connecting mechanism, of an arm upon the rock-shaft, an oscillating power-cylinder and an oscillating cataract-cylinder having their pistons connected to the arm upon the same side of its pivot, the piston of the cataract-cylinder being provided with an upwardly-opening valve.

5. In a shearing-machine the combination with a gate and pivoted power-arm of an oscillatory cataract-cylinder having its axis of oscillation parallel with the axis of oscillation of the power-cylinder, and pistons within the cylinders connected to the power-arm upon the same side of its pivot.

6. In a shearing-machine the combination with a gate and power-arm, of a valve-controlled oscillating motor-cylinder, a valve-lever arranged to actuate the valves, adjustable mechanism operatively connecting the power-arm and valve-lever designed to regulate the stroke of the power-piston, a treadle and adjustable mechanism connecting the treadle and valve-lever.

7. In a shearing-machine the combination with a gate and power-arm of a valve-controlled oscillating power cylinder and piston secured to the power-arm, a valve-lever, a slotted rod connected therewith, a stud upon the power-arm and an adjustable stop upon the slotted rod.

8. In a shearing-machine the combination with a gate and power-arm provided with a stud of a valve-controlled oscillating power cylinder and piston connected to the power-arm, a valve-lever, a slotted rod connected to the valve-lever and engaging the stud on the power-arm and adjustable stops upon the slotted rod above and below the stud.

9. In a shearing-machine, the combination with a gate and valve-controlled motor-cylinder provided with a piston designed to actuate the gate, of a valve-lever and an automatically-actuated detent yielding under pressure but presenting sufficient resistance to prevent accidental movement of the valve-lever, substantially as specified.

10. In a shearing-machine the combination with an arm, oscillatory motor-cylinder, piston therein and valve-chest thereon, of an oscillatory cataract-cylinder having its axis of oscillation parallel to the axis of oscillation of the motor-cylinder, and having a piston connected to the power-arm between its pivot and power-piston and a supply-pipe having a swivel connection.

FRANK J. ROTH.
CHARLES A. BERTSCH.

Witnesses:
WILLIS R. LITTELL,
HARRY D. MORRIS.