Aug. 18, 1959 R. H. GARDNER 2,899,938

HYDRAULIC CYLINDER AND PISTON CONSTRUCTION

Filed Sept. 26, 1955

FIG. 1

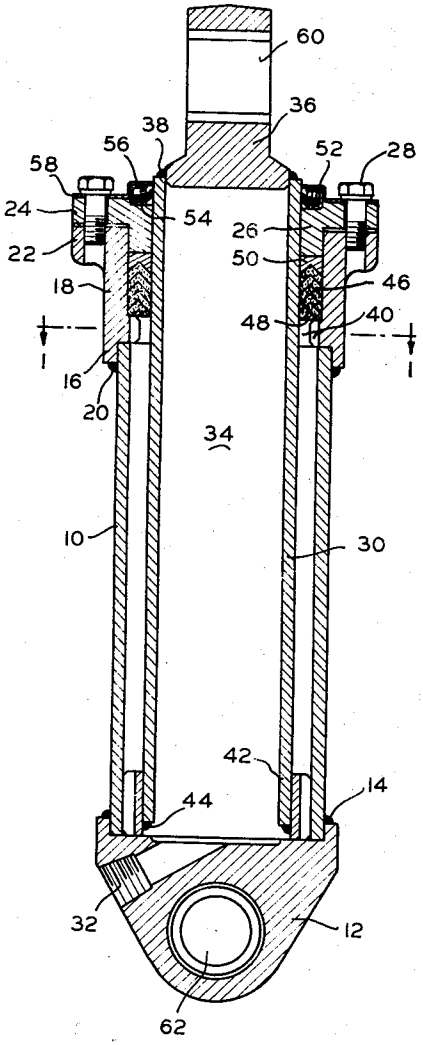

FIG. 2

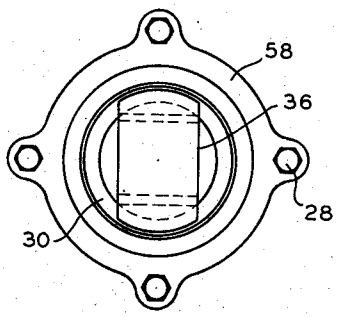

FIG. 3

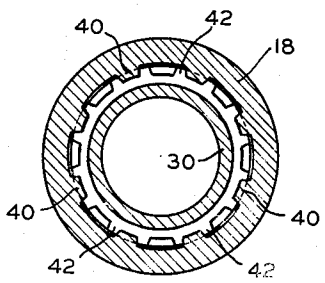

FIG. 4

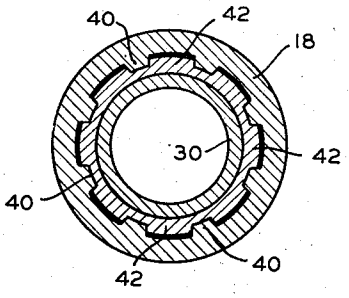

INVENTOR.
RICHARD H. GARDNER
BY J. Frederick Bechtel
ATTY.

United States Patent Office 2,899,938 Patented Aug. 18, 1959

2,899,938

HYDRAULIC CYLINDER AND PISTON CONSTRUCTION

Richard H. Gardner, Buchanan, Mich., assignor to Clark Equipment Company, a corporation of Michigan

Application September 26, 1955, Serial No. 536,485

1 Claim. (Cl. 121—46)

This invention relates to hydraulic cylinder and piston construction and is applicable, for example, for use in the main lift cylinder and piston of an industrial lift truck such as that disclosed in Patent No. 2,678,742 to Wesley Zorn, issued May 18, 1954, although many other and diverse applications of this invention will be apparent to those skilled in the art.

Heretofore fluid leakage and servicing problems have been encountered in the use of certain types of hydraulic cylinder and piston constructions, particularly of a type wherein an elongated piston or ram is actuatable in one direction by the application of fluid under pressure thereto to a predetermined fully extended position and is returnable to the initial or unextended position as a result of, for example, gravity effect or the application of an external load on the ram or piston.

In carrying out my invention I provide a welded three-part hollow cylinder in which a spline is formed about one portion of the inner periphery, and a ram or hollow piston at one end of which a spline is formed about the outer periphery; the piston may be inserted into the cylinder by passing the external spline through the internal spline and then rotated so as to prohibit mating of the splines during operation.

The present invention provides a construction which minimizes or eliminates the above mentioned problems and it is therefore a primary object of this invention to provide an hydraulic cylinder and piston construction wherein selectively matable parts are utilized between the cylinder and piston for permitting assembly and disassembly thereof without necessitating a cylinder construction having a mechanical joint and seal for allowing separation of the cylinder parts.

It is another object of this invention to provide an hydraulic cylinder and piston construction wherein parts of the cylinder and piston are matable in such a manner that servicing of the internal parts of the construction is facilitated to a maximum degree.

It is still another object of this invention to provide an hydraulic cylinder and piston construction wherein a toothed portion of a reciprocable piston is rotatable with the piston to either allow or disallow registry with a similarly toothed portion of the cylinder in which the piston is mounted.

Other objects and advantages of this invention will be apparent to those skilled in the art in view of the following detailed description wherein:

Figure 1 is a vertical sectional view of my hydraulic cylinder and piston construction;

Figure 2 is a plan view of the construction shown in Figure 1;

Figure 3 is a sectional view taken on line 1—1 of Figure 1 with the parts of the construction related as shown in Figure 1; and

Figure 4 is also a sectional view taken on line 1—1 of Figure 1 when the piston or ram of the construction is in process of assembly or disassembly with the cylinder,

and toothed portions of the piston and cylinder are in registry with each other.

Referring now to Figures 1, 2 and 3, a hollow cylinder 10 is connected at the lower end thereof, as shown, to a cylinder closure and mounting member 12 at an annular welded section 14, and at the upper end thereof to an overlapping section 16 of a hollow cylinder 18 and an annular welded section 20. The cylinder 18 is formed with a plurality of tapped bosses 22 which complement tapped bosses 24, which are integrally formed with a bored cylinder end plate 26 and connectable thereto by bolts 28.

A hollow cylindrical piston or ram 30 is receivable within the above described cylinders 10, 18 and 26, in a manner to be described, and, when so received, is upwardly actuatable therein upon the application of hydraulic fluid under pressure through a passage 32 to form an expansible chamber 34 within the confines of the walls of cylinder 10, piston 30, mounting member 12 and a force transmitting or piston head member 36 connected to piston 30 by an annular shaped weld 38.

The cylinder 18 has integrally formed therewith about one portion of the inner periphery thereof a machined or molded circular section of alternate keys or teeth and slots. A second circular section 42 of alternating keys and slots is mounted on the outer wall of piston 30 at the lower extremity thereof, being connected thereto by an annular shaped welded section 44. The alternating key and slot sections 40 and 42 are molded or machined to form registrable or complementary internal and external splines on cylinder 18 and piston 30, respectively; i.e., the slots in the cylinder 18 are made sufficiently large to allow the keys of piston spline 42 to pass therethrough and, contrariwise, the slots in the piston spline 42 are made sufficiently large to allow the keys of cylinder spline 40 to pass therethrough.

When the parts are assembled as shown in Figures 1, 2, and 3, cylinder 18 functions as a retaining member for a suitable packing element 46 which is mounted in sealing relation to cylinder 18 and piston 30 within an annular chamber formed therebetween, and which is retained at the circular edges thereof by a triangular shaped ring 48 seated on spline 40 and a V-grooved ring 50 held in position by cap member 26. A flexible ring-shaped sealing means 52 is mounted in an annular depression 54 of cap member 26, being held in position by a spring 56 and a plate 58 which is bolted to member 26.

In the assembled position, as shown, an opening 60 in force transmitting member 36, which is adapted to receive, for example, a load supporting cross shaft, not shown, is preferably in the longitudinal plane thereof which is perpendicular to the longitudinal plane of an opening 62 formed in mounting member 12 and adapted to receive a reciprocable shaft, not shown, for tilting the entire hereinbefore described structure about the cross shaft receivable in opening 60. When in this preferred angular relation, as well as other angular relations, the axis of each of the keys of spline 42 are preferably substantially in the same plane as the corresponding axis of each of the keys of spline 40, as best shown in Figure 3. When the respective keys of splines 40 and 42 have this relation it is apparent that application of hydraulic fluid under pressure through passage 32 to chamber 34 can effect an upward movement of piston 30 to a maximum extended position which is defined by the position of piston 30 when the keys of spline 42 are in abutment with the keys of spline 40. In other words, the keys of spline 40 function as a maximum stroke stop for piston 30 whenever the construction is assembled for operation as shown in Figure 1.

It will be appreciated that during operation of piston **30** the inner wall forming the bore in cap member **26** and the outermost surfaces of the keys of spline **42** function as guides for the piston. It will also be appreciated that the welded connections **14** and **20** insures leak-proof construction between the various cylinder parts so that the undesirable condition of hydraulic fluid leakage with attendant loss of pressure will not occur, and packing member **46** alone is required to insure against leakage between cylinder member **18** and piston **30**. It will also be seen that the slots in splines **40** and **42** permit the flow of hydraulic fluid into the area of packing **46**, thereby tending to preserve same and also tending to flex said packing outwardly against the walls of the cylinder and piston so as to aid in the maintenance of an effective seal therebetween.

If, for servicing or any other reason, it should be desired to disassemble the piston **30** from the retaining cylinders it is only necessary to disconnect the cross shaft, not shown, mounted in member **36** from any load supporting or other member to which it may be connected at opposite ends thereof, to remove cap member **26** by disconnecting bolts **28** from cylinder **18**, to pull or actuate, by suitable means, piston **30** upwardly or outwardly until contact between the keys of splines **40** and **42** is made, to rotate piston **30** a partial turn so as to register the slots of each spline with the keys of each other spline, and, finally, to pull the entire piston assembly outwardly through the spline **40**, as shown in Figure 4, thereby disassembling same from the cylinder construction. It is apparent that outward actuation of spline **42** through spline **40** will readily disengage packing **46** from the walls of the cylinder and piston and pull same outwardly with the piston during disassambly thereof.

The opposite sequence of steps is followed during assembly of the hereinabove described structure: First, the piston **30** is positioned relative to cylinders **10** and **18** so that the keys of the splines **40** and **42** readily pass through the respective slots of the opposite splines and the piston is brought to rest in the position shown in Figure 1; second, the packing ring **46** is mounted about piston **30**; third, cap member **26** is mounted on cylinder **18**; and lastly, piston **30** and member **36** are partially turned so that a cross shaft in opening **60** may be attached to a load supporting member, not shown, in which position the respective keys of splines **40** and **42** are positioned as shown in Figure 3.

From the above it will be apparent that my invention provides a cylinder and piston construction wherein leakage or loss of hydraulic pressure through the parts is

minimized or eliminated, sealing efficiency of a packing member is aided by the application of the hydraulic pressure thereto, and servicing and maintenance of the packing, piston, and internal portion of the cylinder construction is greatly facilitated while use of only a minimum or relatively small number of parts is necessary.

Although I have described only one embodiment of my invention, other construction and arrangement of parts will be apparent to those skilled in the art.

I claim:

In combination, hollow cylinder means including first and second vertically extending portions, an annular weld between adjacent ends of said first and second portions for rigidly connecting together said portions, an internal spline formed on the inner periphery of one of said portions comprising a plurality of axially extending teeth, which are formed integrally with said one portion and which extend radially inwardly only of said inner periphery, hollow cylindrical piston means closed at one end thereof and of predeterminately smaller diameter than the diameter of said cylinder means, and external spline connected to the outer periphery of said piston means having a plurality of teeth extending axially of said piston means, said first mentioned spline limiting the extent of movement of said piston means when the teeth of said second mentioned spline are actuated into contact with the teeth of said first mentioned spline, a cap member connected to the end of said cylinder means, annular packing means located radially between the walls of said piston means and said cylinder means and located axially between and in abutment with said cap member and said first mentioned spline, means closing the one end of said cylinder means, and passage means in said closing means adapted to connect the inner chamber of said hollow piston means with a source of pressure fluid, said first and second mentioned splines forming passage means for conducting piston actuating fluid pressure to said packing means.

References Cited in the file of this patent

UNITED STATES PATENTS

2,044,699	Johnson	June 16, 1936
2,204,365	Klemm	June 11, 1940
2,471,989	Weaver	May 31, 1949
2,692,584	Armington et al.	Oct. 26, 1954

FOREIGN PATENTS

608,704	Great Britain	Sept. 20, 1948