J. F. COULTHURST.

TOOLMAKER'S MICROMETER ADJUSTING FEELER GAGE.

APPLICATION FILED SEPT. 30, 1912.

1,068,983. Patented July 29, 1913.

Fig. 1.

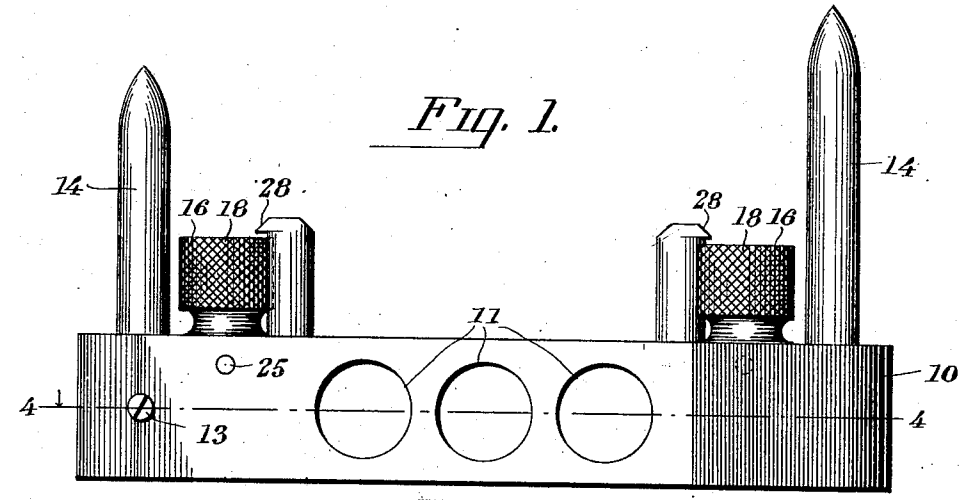

Fig. 2.

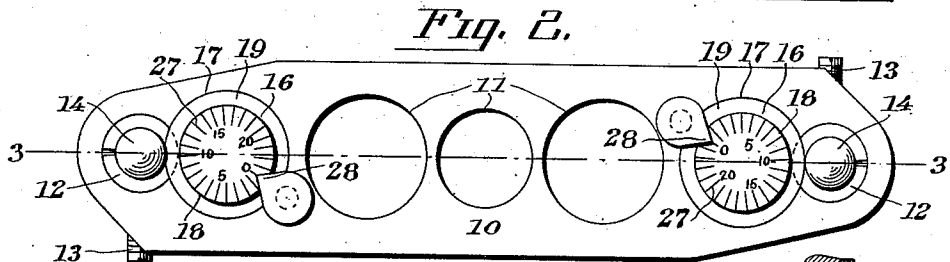

Fig. 3.

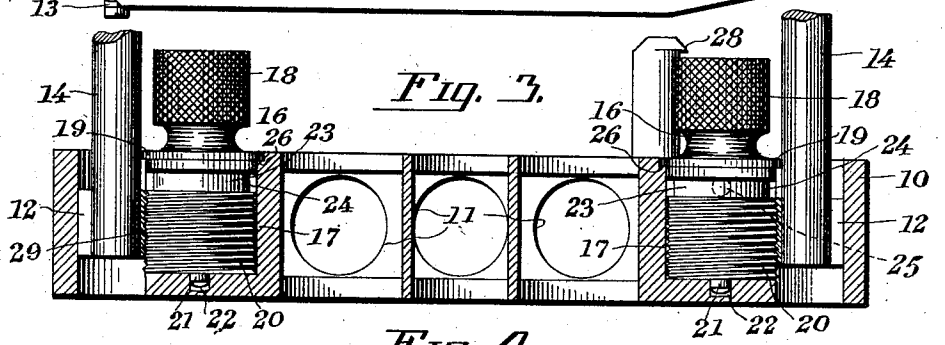

Fig. 4.

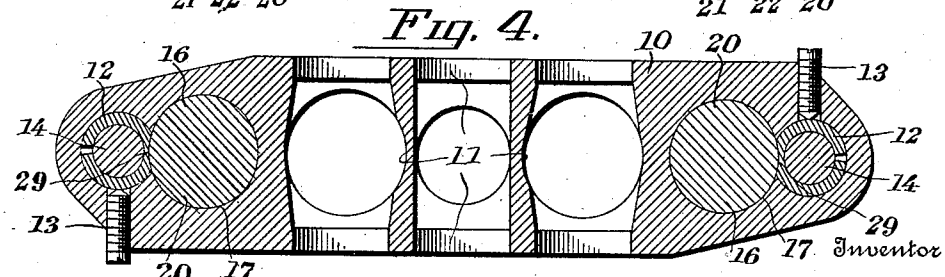

Inventor

John F. Coulthurst

Witnesses

M. F. Gannett

P. A. Holter

By Victor J. Evans

Attorney

COLUMBIA PLANOGRAPH CO., WASHINGTON, D. C.

UNITED STATES PATENT OFFICE.

JOHN FENTON COULTHURST, OF OWENSBORO, KENTUCKY.

TOOLMAKER'S MICROMETER ADJUSTING FEELER-GAGE.

1,068,983. Specification of Letters Patent. Patented July 29, 1913.

Application filed September 30, 1912. Serial No. 723,221.

To all whom it may concern:

Be it known that I, JOHN F. COULTHURST, a subject of the King of England, residing at Owensboro, in the county of Daviess and State of Kentucky, have invented new and useful Improvements in Toolmakers' Micrometer Adjusting Feeler-Gages, of which the following is a specification.

The invention relates to gages and has for an object to provide an adjustable micrometer feeler gage.

The invention embodies, among other features, a device that is adapted for use in measuring and determining fractional differences in the elevation or planes of surfaces and in which a difference of a hundredth or thousandth of an inch in the plane surfaces of a piece of work can be readily determined.

The invention is further adapted for use in rapidly and accurately determining the relative heights of various parts of machine work and the like.

In the further disclosure of the invention reference is to be had to the accompanying drawings, constituting a part of this specification, in which similar characters of reference denote corresponding parts in all the views, and in which:

Figure 1 is a side elevation of the device; Fig. 2 is a plan view; Fig. 3 is a vertical longitudinal sectional view taken on the line 3—3 in Fig. 2; and Fig. 4 is a horizontal sectional view taken on the line 4—4 in Fig. 1.

Referring more particularly to the views, use is made of an elongated body 10 provided with a series of openings 11 forming finger grips or the like so that the body 10 will constitute a holder to permit of easily manipulating the device. Split bushings 12 are secured in openings in the body 10 with screws 13 having threaded connection with the body and engaging the bushings for a purpose that will be hereinafter more fully described, and feeler pins 14 are mounted in the split bushings 12 as shown.

Operating members 16 are revolubly mounted in openings 17 in the body 10, the mentioned openings being formed in the body adjacent the openings having the split bushings 12 therein, the said operating members 16 each consisting of a knurled head 18, a circular flange 19 and a threaded shank 20, projecting from a face of the flange 19 and having integrally formed therewith a bearing pin 21, the operating members 16 being revoluble in the openings 17 as mentioned heretofore, with the bearing pins 21 extending into recesses 22 in the body 10, shanks 23 being provided with reduced portions 24 between the knurled heads 18 and threaded portions of the shanks. Screws 25 have threaded connection with the body 10 with the inner ends of the screws projecting through the openings 17 to lie between the knurled heads 18 and threaded portions of the shanks 20, thus locking the operating members 16 in the openings 17 without preventing the heretofore mentioned revoluble movement of the operating members within the said openings. The circular flanges 19 of the operating members are adapted to repose upon seats 26 formed on the body 10, as shown more particularly in Fig. 3. The operating members 16 are provided with a series of graduations 27 and pointers 28 are rigidly mounted on the body 10 and project over and are spaced from the operating members 16 so that when the operating members are revolved on the body 10, the graduations 27 will pass beneath the reduced ends of the pointers 28.

The split bushings 12 are provided with threaded recessed portions 29 in the periphery thereof, the threads of the said recessed portions being in mesh with the threads of the shanks 20 of the operating members 16. Now when it is desired to use the device, the screws 13 are first operated to disengage the inner ends thereof from the split bushings 12 and then by imparting rotation to the operating members 16, the split bushings will be advanced or retarded in the openings in the body 10, in which the split bushings are mounted in view of the threads on the shank 20 meshing with the threads of the recessed portions 29 of the bushings 12, and the feeler pins 14 clamped in the bushings 12 by the spring-like clamping action of the split bushings will thus be advanced or retarded with the bushings. Now when the feeler pins have been advanced or retarded relatively to the body 10 to the desired distance, the screws 13 are moved into engagement with the split bushings 12, thus causing the split bushings to rigidly clamp the heads 15 of the feeler pins thereto and securing the feeler pins in locked position in the bushings 12, the graduations 27 on the operating members 16, in connection with the pointers 28, being adapted to indicate the distance

that the feeler pins 14 have been advanced or retarded on the body 10.

Having thus described my invention, I claim:

1. In a device of the class described, the combination with a body provided with a pointer, of a threaded operating member revolubly mounted therein, a scale carried by the operating member and arranged adjacent to the said pointer, a threaded split bushing movable in the said body, with the threads of the bushing meshing with the threads of the operating member, a feeler pin clamped by the said bushing and operable therewith, and means on the said body and movable therein to engage the said bushing and rigidly lock the feeler pin thereto.

2. In a device of the class described, the combination with a body provided with pointers, of threaded operating members revolubly mounted therein, a scale carried by the operating members and arranged adjacent to the said pointers, threaded split bushings movable in the said body, with the threads of the bushings meshing with the threads of the operating members, feeler pins clamped by the said bushings and operable therewith, means on the said body and movable therein to engage the said bushings and rigidly lock the feeler pins thereto, pointers on the said body, and graduations on the said operating members and adapted to pass beneath the said pointers when the said operating members are actuated to operate the said bushings and advance or retard the said feeler pins on the said body.

In testimony whereof, I affix my signature in presence of two witnesses.

JOHN FENTON COULTHURST.

Witnesses:

K. M. SWEENEY,

E. M. WIMSATT.

Copies of this patent may be obtained for five cents each, by addressing the "Commissioner of Patents, Washington, D. C."