(No Model.) 8 Sheets—Sheet 1.

F. H. RICHARDS.

ADDING MACHINE.

No. 590,277. Patented Sept. 21, 1897.

Fig. 1.

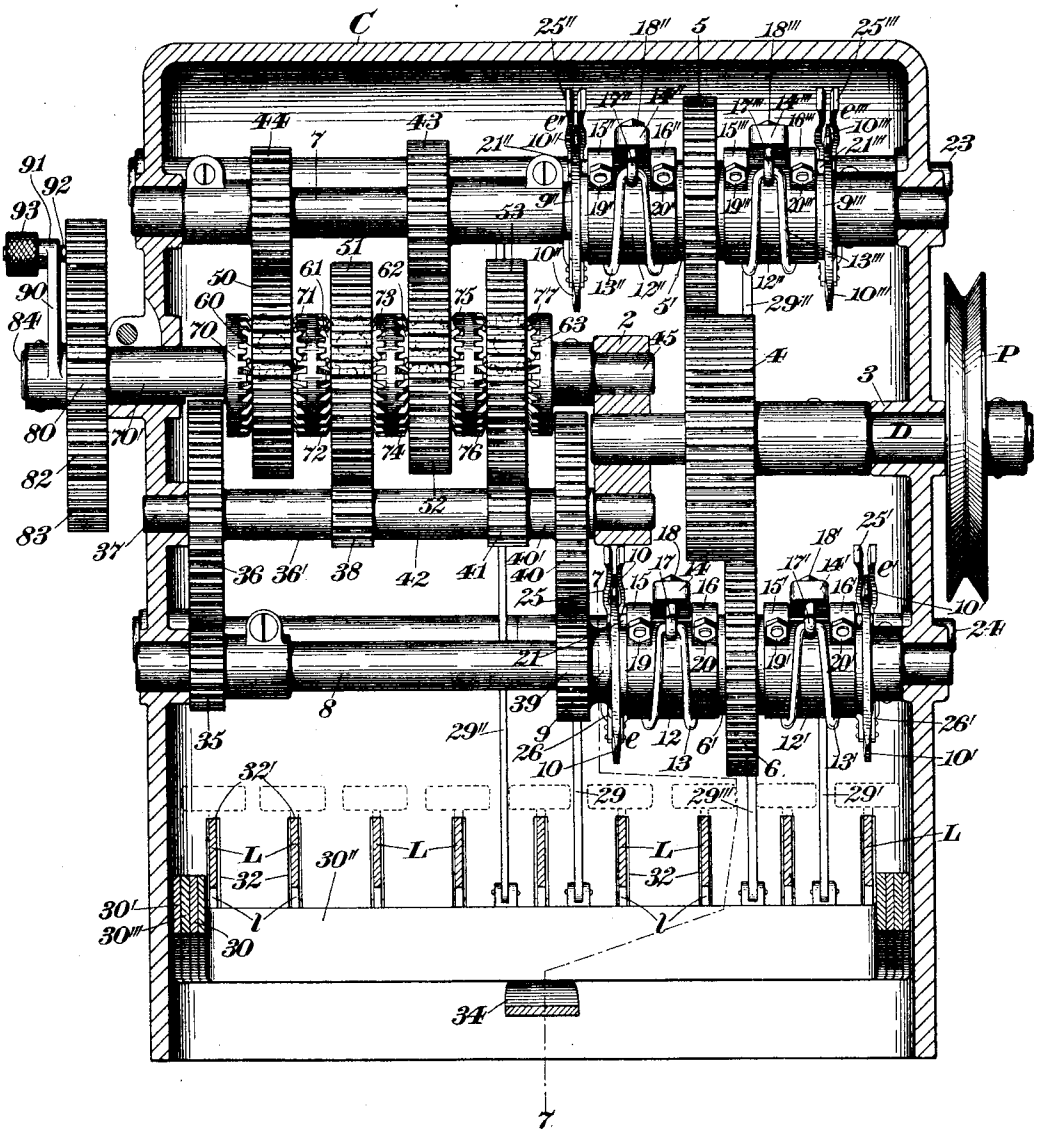

Witnesses:

F. L. Edwards Jr.

Fred. J. Dole.

Inventor:

F. H. Richards.

THE NORRIS PETERS CO., PHOTO-LITHO., WASHINGTON, D. C.

(No Model.) 8 Sheets—Sheet 2.

F. H. RICHARDS.

ADDING MACHINE.

No. 590,277. Patented Sept. 21, 1897.

Fig. 2.

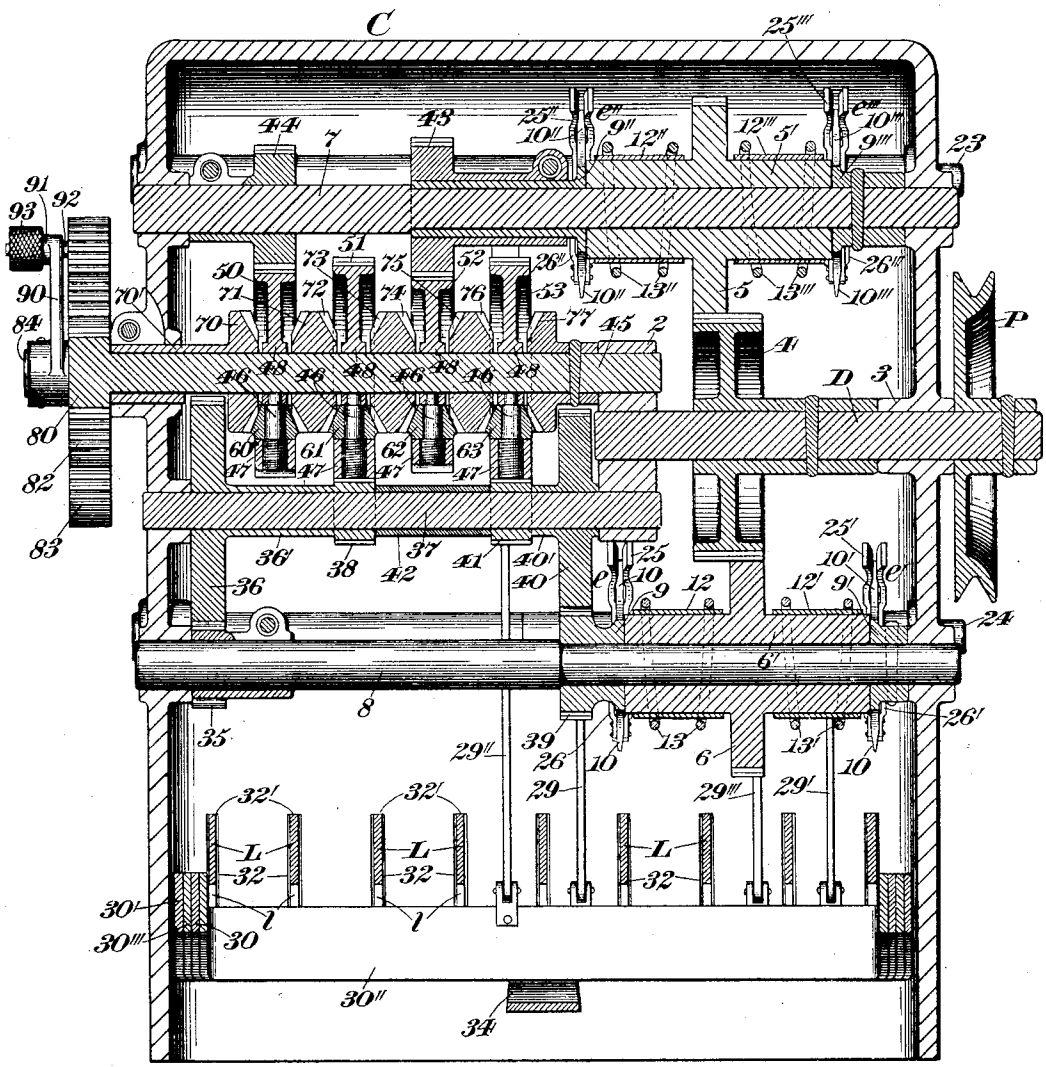

Witnesses:
J. L. Edwards Jr.
Fred. J. Dole.

Inventor:
F. H. Richards.

THE NORRIS PETERS CO., PHOTO-LITHO., WASHINGTON, D. C.

(No Model.) 8 Sheets—Sheet 3.

F. H. RICHARDS.

ADDING MACHINE.

No. 590,277. Patented Sept. 21, 1897.

Fig. 3.

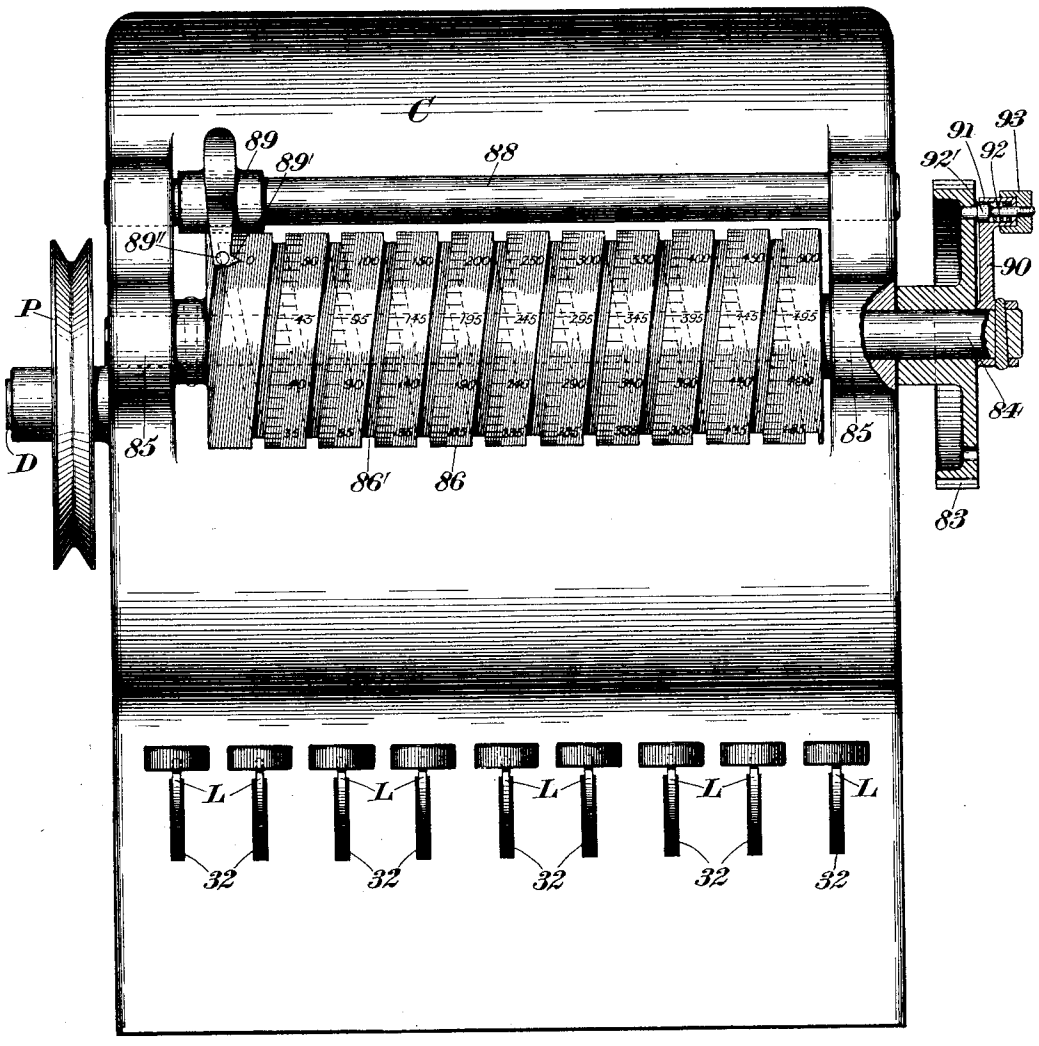

Witnesses:
F. L. Edwards Jr.
Fred. J. Dole.

Inventor:
F. H. Richards.

THE NORRIS PETERS CO., PHOTO-LITHO., WASHINGTON, D. C.

(No Model.) 8 Sheets—Sheet 4.

F. H. RICHARDS.

ADDING MACHINE.

No. 590,277. Patented Sept. 21, 1897.

Fig. 4.

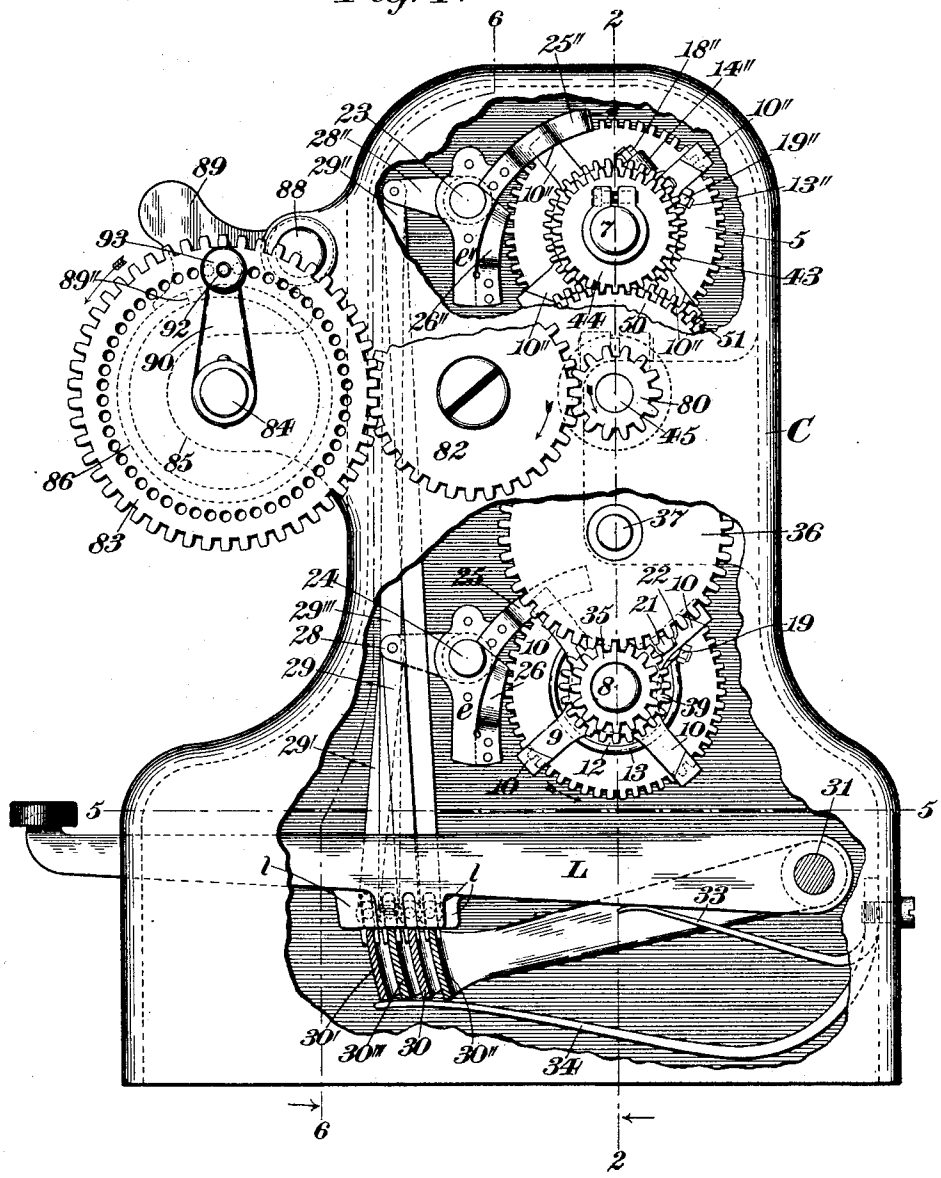

Witnesses:
E. L. Edwards Jr.
Fred. J. Dole.

Inventor:
F. H. Richards.

THE NORRIS PETERS CO., PHOTO-LITHO., WASHINGTON, D. C.

(No Model.) 8 Sheets—Sheet 5.

F. H. RICHARDS.

ADDING MACHINE.

No. 590,277. Patented Sept. 21, 1897.

Fig. 18.

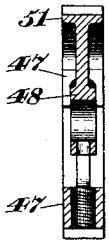

Fig. 19.

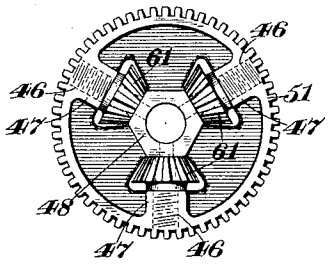

Fig. 20.

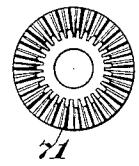

Fig. 21.

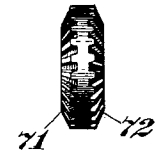

Fig. 5.

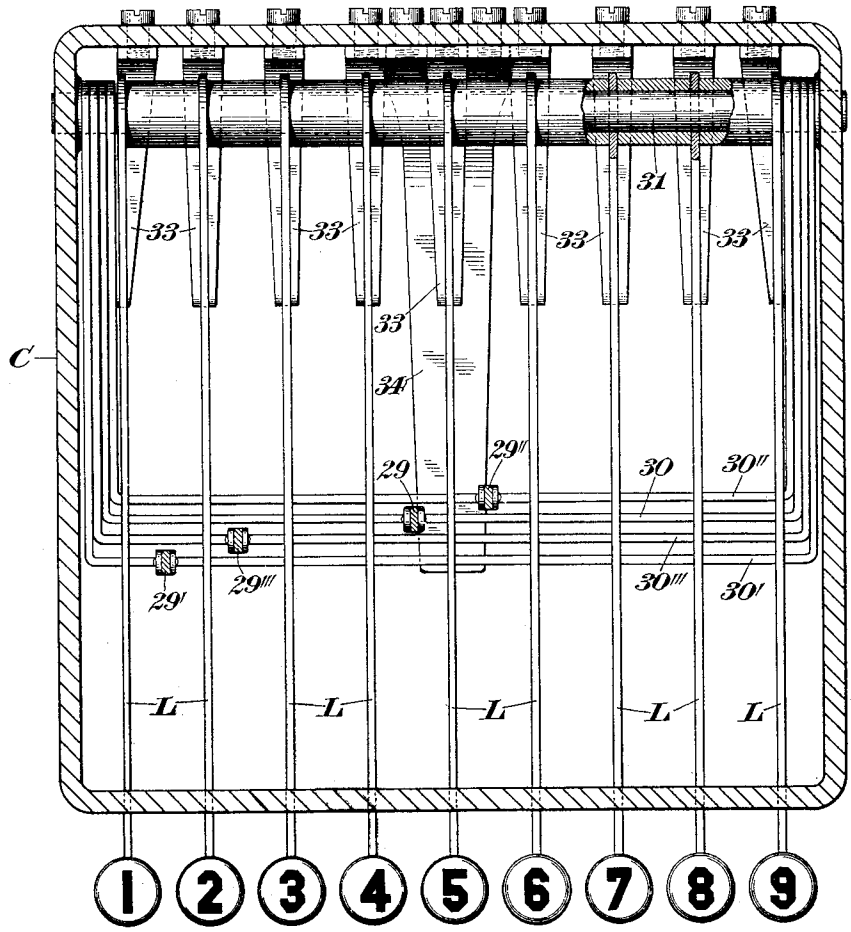

Witnesses:
J. L. Edwards Jr.
Fred. J. Dole.

Inventor:
F. H. Richards.

THE NORRIS PETERS CO., PHOTO-LITHO., WASHINGTON, D. C.

(No Model.) 8 Sheets—Sheet 6.

F. H. RICHARDS.

ADDING MACHINE.

No. 590,277. Patented Sept. 21, 1897.

Fig. 6.

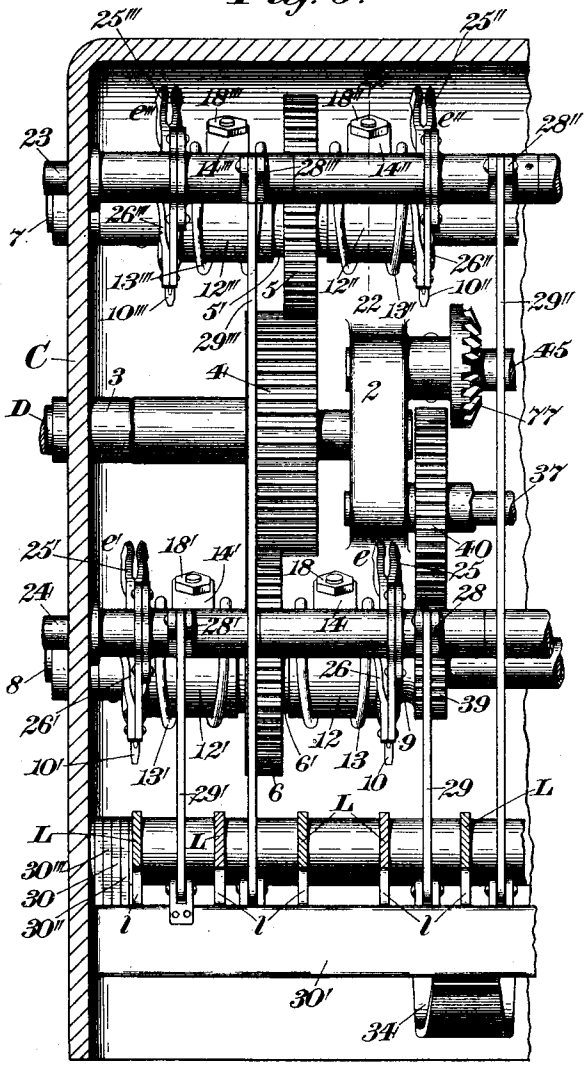

Fig. 22.

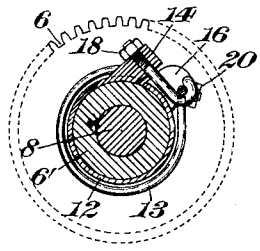

Fig. 23.

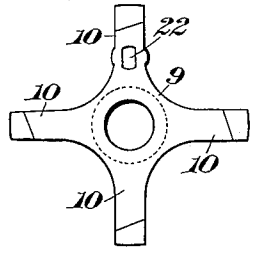

Fig. 24.

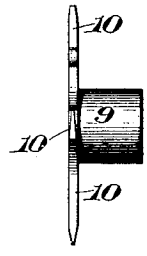

Fig. 25.

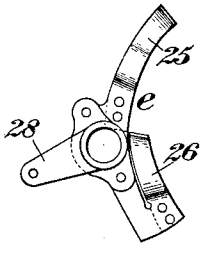

Fig. 26.

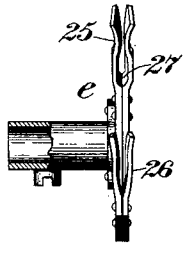

Witnesses:
E. L. Edwards Jr.
Fred. J. Dole.

Inventor:
F. H. Richards.

THE NORRIS PETERS CO., PHOTO-LITHO., WASHINGTON, D. C.

(No Model.) 8 Sheets—Sheet 7.

F. H. RICHARDS.

ADDING MACHINE.

No. 590,277. Patented Sept. 21, 1897.

Fig. 7.

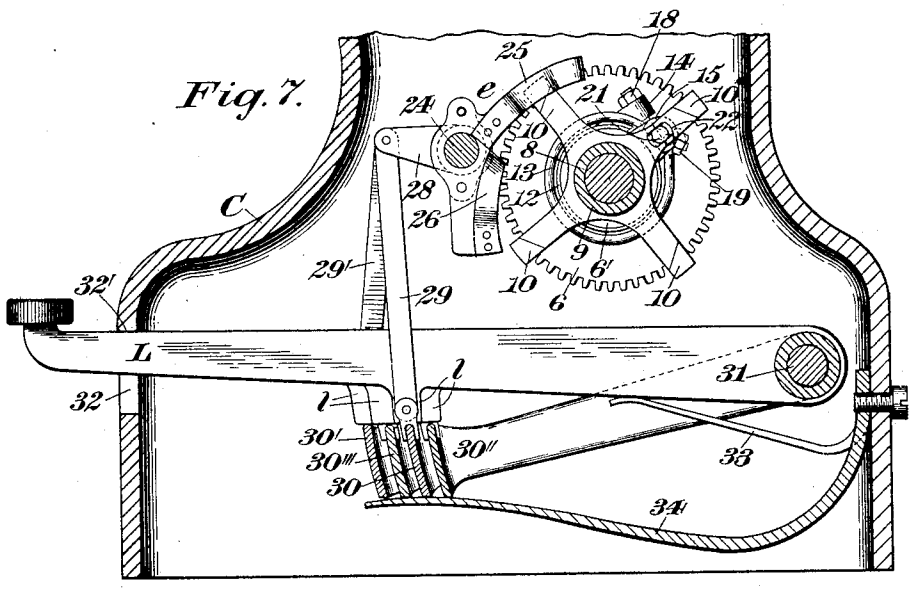

Fig. 8.

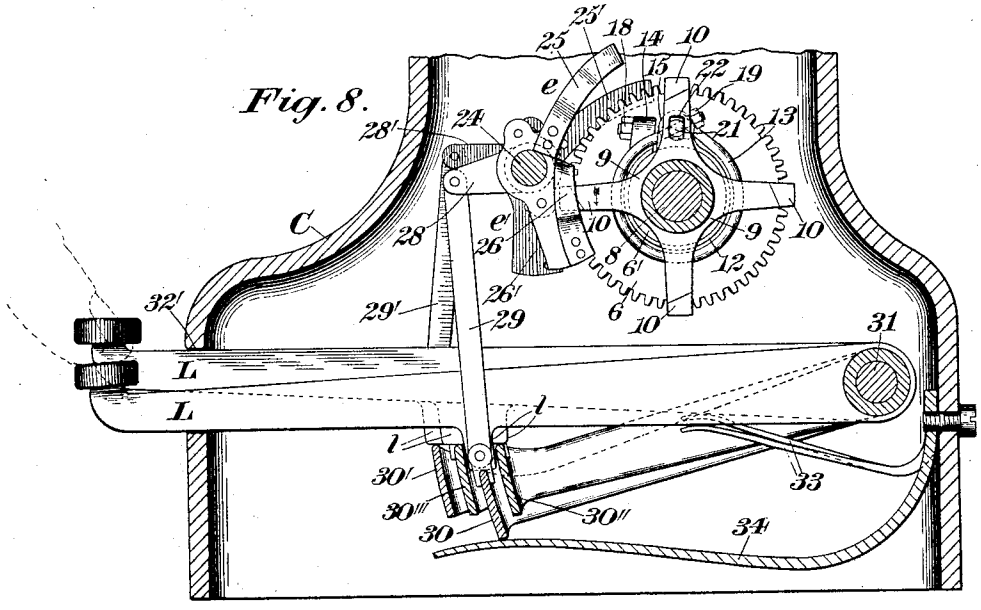

Witnesses:
F. L. Edwards Jr.
Fred. J. Dole.

Inventor:
F. H. Richards.

THE NORRIS PETERS CO., PHOTO-LITHO., WASHINGTON, D. C.

(No Model.) 8 Sheets—Sheet 8.

F. H. RICHARDS.

ADDING MACHINE.

No. 590,277. Patented Sept. 21, 1897.

Fig. 9.

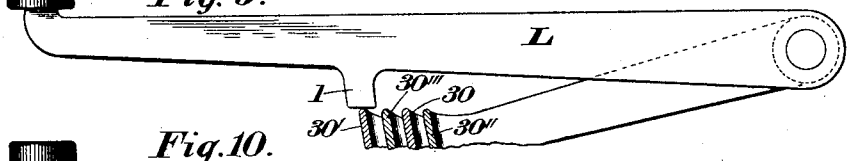

Fig. 10.

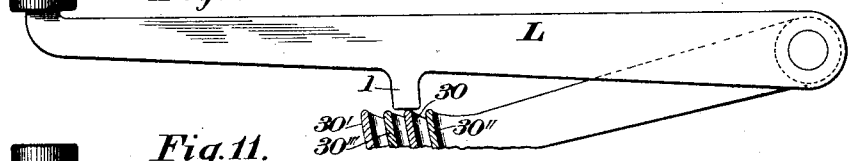

Fig. 11.

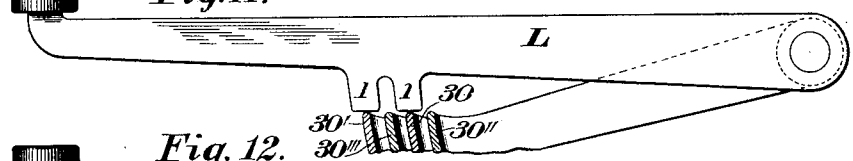

Fig. 12.

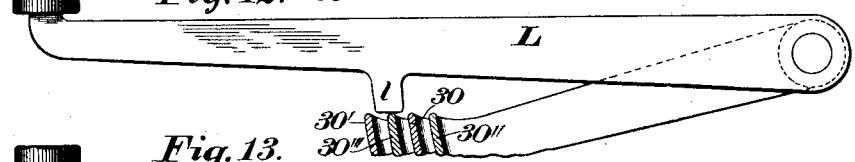

Fig. 13.

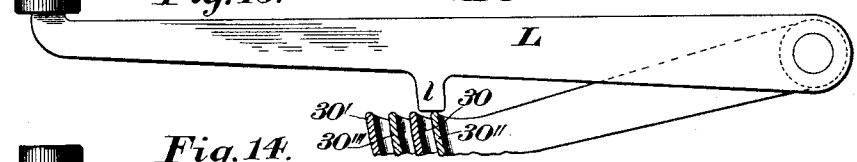

Fig. 14.

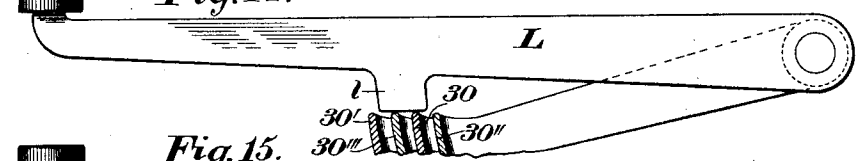

Fig. 15.

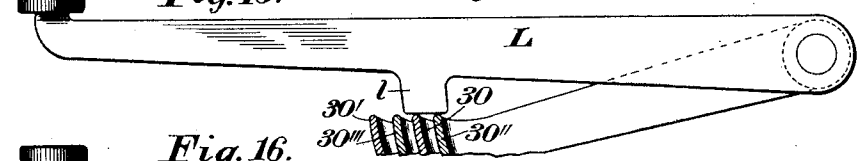

Fig. 16.

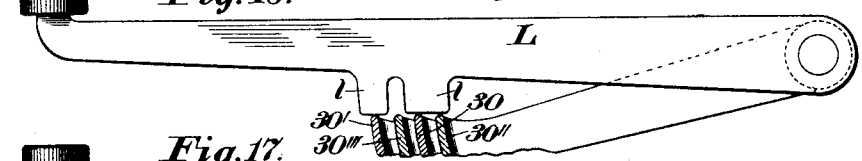

Fig. 17.

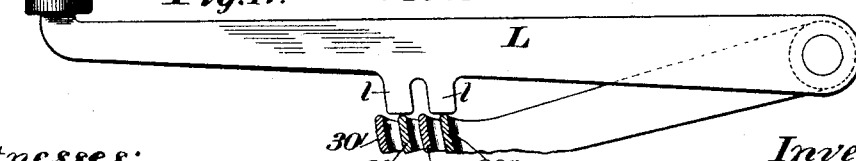

Witnesses:
F. L. Edwards Jr.
Fred. J. Dole.

Inventor:
F. H. Richards.

THE NORRIS PETERS CO., PHOTO-LITHO., WASHINGTON, D. C.

UNITED STATES PATENT OFFICE.

FRANCIS H. RICHARDS, OF HARTFORD, CONNECTICUT.

ADDING-MACHINE.

SPECIFICATION forming part of Letters Patent No. 590,277, dated September 21, 1897.

Application filed November 7, 1896. Serial No. 611,318. (No model.)

To all whom it may concern:

Be it known that I, FRANCIS H. RICHARDS, a citizen of the United States, residing at Hartford, in the county of Hartford and State of Connecticut, have invented certain new and useful Improvements in Adding-Machines, of which the following is a specification.

This invention relates to adding-machines; and it has for its main object to provide improved mechanism by means of which the sum of a series of movements representing determined feed values may be obtained and indicated, the mechanism being especially adapted for determining and indicating the sum of a selected series of units of feed value or multiples thereof.

In carrying my invention into effect I prefer to employ a plurality of driving elements, which may be so combined and organized that it will not be necessary to make use of a separate driving element to represent each unit of feed movement or multiple thereof, but that feed values in excess of those indicated by the driving elements employed may be registered by the simultaneous action of a plurality of driving elements the sum of the characteristic feed movements of which equals that which it is desired to secure.

By properly permuting the combinations of driving elements in a manner which will be hereinafter more particularly set forth I am enabled to selectively secure a relatively large number of different feed movements from a relatively small number of driving members, the characteristic movement of each such element being preferably either the unit of feed movement or a multiple of the same, and the feed movements obtained by the simultaneous action of two or more of these elements being also, therefore, multiples of the unit of movement.

The permutation of the movements of the feed members is effected advantageously by the employment of a plurality of orbitally-movable rotative driving elements operatively connected in such a manner that each of these rotary elements when carried in its orbit may rotate at a determined rate of speed independently of the other driving elements, but will have its rotative movement accelerated by the preceding driving element when such preceding driving element is simultaneously orbitally actuated. A plurality of orbitally-movable rotary driving elements connected to operate in this manner I term "orbital speed-accumulating driving elements," as they serve to accumulate or add together the movements of driving elements simultaneously traveling or revolving in orbital paths.

In the preferred form of my invention the different feed movements are obtained by the employment of a gear-train in which orbitally movable or revoluble rotary driving-gears are connected by rotary gears, which transmit the movements of the orbitally-traveling gears to suitable driven members, in the present case to a driven shaft operated by the terminal gear of the train, and these orbitally-moving gears will preferably be supported and revolved by rotary carriers or gears concentric with the rotary gears which transmit the movements of the revoluble gears. It is obvious that the revoluble gears should be operative in orbital direction, either independently of one another or else selectively in any desired combination, the carriers or gears supporting them serving as actuators for imparting the proper orbital, and hence rotary, movements to the respective revoluble gears.

The gear-train just described embodies in the preferred organization thereof a driving-gear, a pinion-rotated driven gear, and a driving-gear-rotated pinion orbitally movable or revoluble in the orbit of the driving-gear, and preferably in the orbits of both of such gears, and having its rotary movement transverse to its orbital path. One of the several rotary gears or actuators hereinbefore described constitutes a pinion-revolving pinion-carrier for supporting and revolving the pinion or driving element.

It is one of the main objects of this invention to provide in connection with the driving elements selectors for controlling at will the movements of said driving elements. These driving-element-controlling selectors are preferably organized so that at least one of them controls a determined plurality of the driving elements, while each remaining selector governs the movements of a determined number of these driving elements.

The operation of the driving elements may

be controlled to advantage by means of universal bars selectively operated by key-levers, and one of the leading features of my present invention is the employment, in connection with suitable operated devices, of a plurality of universal bars and key-levers, at least one of which controls a determined plurality of said universal bars, while each remaining key-lever governs a determined number of such universal bars.

The driving elements which determine the respective feed movements of the adding mechanism are preferably normally idle and are adapted to be frictionally coupled to suitable main driving means, and in the present instance one of the chief functions of the selectors is to selectively couple the driving elements or gears and the main driving means, these selectors acting also to uncouple said parts after the respective feed movements have been imparted to the operated driving elements. Hence the selectors constitute combined coupling and uncoupling selectors, and they are preferably frictionally acting—that is to say, they couple the driving elements and the main driving means by friction.

In mechanism of the class specified herein the movements of the separately-rotative driving elements would necessarily be intermittent, and for this reason the selectors are preferably key-operated escapements, which will permit the driving elements to rotate intermittently step by step on successive operations of said escapements. It will be noticed in connection with the operation of this escapement and the frictionally-acting coupling and uncoupling devices that the adding mechanism embodies a friction-clutch comprising a continuously-rotative driver and a frictionally-rotated feed member, the rotation of which feed member is controlled by an escapement.

The particular construction of the escapement and of the feed member which it controls is especially designed and adapted to secure a noiseless, easily-operated, and positive feed mechanism, and these advantages are assured by the employment of a rotary feed member and an escapement which have cooperative frictionally-clutching stop-faces. These two members are preferably operative in corresponding planes, and in the present construction the escapement has a pair of frictionally-clutching forks coöperative with the stop-faces on the feed member, the holding-faces or inner sides of these forks diverging toward the stops of the feed member.

In the drawings accompanying and forming part of this specification, Figure 1 is a vertical sectional rear elevation of an adding-machine embodying my present invention, the section being taken in line 2 2, Fig. 4, and the view illustrating substantially all of the working parts in elevation. Fig. 2 is a similar view illustrating said working parts in section. Fig. 3 is a sectional front elevation of the machine. Fig. 4 is a side elevation of the same, looking from the right hand in Fig. 3, portions of the casing being broken away to show the operating mechanism. Fig. 5 is a horizontal section of the machine, the section being taken in line 5 5, Fig. 4, the view illustrating the universal bars and the key-levers coöperative therewith. Fig. 6 is a sectional front elevation of the left-hand side of the machine, the section being taken substantially in line 6 6, Fig. 4. Figs. 7 and 8 are sectional elevations of the lower portion of the machine, the section being taken substantially in line 7 7, Fig. 1, the views illustrating, respectively, the normal idle positions of the selectors and coöperative devices and the operation of the escapement on the depression of a key. Figs. 9 to 17, inclusive, are details illustrating the respective key-levers, designated in Fig. 5 by the numerals 1 to 9, inclusive, and also showing the universal bars coöperating with said key-levers, these views representing the manner in which the unit of feed movement and the different multiples thereof, from "2" to "9," respectively, are selected by the keys. Figs. 18 and 19 are respectively a transverse section and a side elevation of the rotary gear or pinion-carrier which forms the actuator for revolving the orbitally-movable driving elements or pinions that determine the respective feed movements of the gear-train. Figs. 20 and 21 are respectively a side elevation and an edge view of a double bevel-gear for transmitting the movements of the pinions to the terminal member of the gear-train. Fig. 22 is a detail transverse sectional view illustrating the friction-clutch for coupling one of the driving-gears to its driving-shaft, the section being taken in line 22 22, Fig. 6. Figs. 23 and 24 are respectively a side elevation and an edge view of the feed member for intermittently rotating its respective driving element in the gear-train, and Figs. 25 and 26 are respectively a side elevation and a sectional edge view of the escapement for controlling the movements of the feed member illustrated in Figs. 23 and 24.

Similar characters designate like parts in all the figures of the drawings.

The operative parts of my adding-machine may be inclosed in a suitable casing, which is designated herein in a general way by C and has a bracket or block 2 secured to the inner face of its rear side, as shown in Figs. 1 and 2. The main driving-shaft of the machine, which shaft is designated by D, will preferably be supported at one of its ends in this block and at its other end in a bearing 3 in the side of the casing C. This shaft carries a driving-pulley, such as P, which may be operated by a belt from any suitable source of power. The shaft D may transmit power to the several operative mechanisms by means of a large spur-wheel 4, which in the present case is keyed to said shaft and has a wide face. This spur-wheel meshes in the present instance with a pair of spur-gears

5 and 6, carried, respectively, by shafts 7 and 8, extending completely across the casing and having their outer ends journaled in suitable bearings in the sides of said casing. The gears 5 and 6 are not secured directly to the shafts on which they are mounted, but are formed with long hubs 5′ and 6′, which are loosely mounted on said respective shafts, these shafts being driven by frictional coupling devices adapted to intermittently connect said spur-gears with the shafts. Four sets of these coupling devices are shown in the drawings of this application, but as they are substantially identical in construction a description of one will suffice for all, appropriate prime-marks being employed to designate those corresponding parts of the other coupling devices which are not particularly referred to herein.

The shaft 8 has fixed thereon a feed member 9, which in the present instance is provided with four equidistant stop-arms (designated by 10) having at their outer ends wedge-shaped stop-faces. (See particularly Figs. 23 and 24.) This feed member is preferably secured to the shaft by a key and is adapted to be engaged and intermittently released by an escapement, such as *e*, it being obvious that if a friction-coupling is employed between the gear 6 and the feed member the shaft 8 will be intermittently rotated when the feed member is released by the escapement. The coupling device in the present instance is in the nature of a divided friction-ring 12, the ends of which are joined by a resilient connector 13.

The connector 13 and the friction-ring 12 are preferably joined in the following manner: At one end thereof the ring 12 has a boss 14, and at the opposite end thereof a pair of bosses 15 and 16 at opposite sides of the boss 14, all of said bosses having parallel apertures or bores. The connector is in the present instance in the form of two substantially circular coils connected by a U-shaped loop, which loop is engaged by a hook 17, passed through the aperture in the boss 14 and adjustable by means of a nut 18 to increase or decrease the tension on the connector. The extreme ends of the connecting-wire are passed through the apertures in the bosses 15 and 16 from the side thereof opposite that at which the hook 17 enters the opening in the boss 14, and the ends of said wire are screw-threaded to receive nuts 19 and 20, which coöperate with the nut 18 for regulating the tension upon the connector. It will be noticed that this connecting-wire need not necessarily lie against the periphery of the friction-ring 12, as said connector depends principally upon its resilience for drawing together the ends of the friction-ring, the adjustment by means of the nuts being intended to bring the parts into proper relation with respect to each other and to the shaft on which they are mounted and to take up wear from time to time. The connection between the coupling-ring 12 and the feed member 9 may be effected in any desired manner. In the present case a pin or stud 21 extends from the boss 15 and engages the walls of a slot 22 in one of the arms 10 of the feed member, so that when the feed member is released it will be immediately partially rotated by the action of the coupling device.

As a means for permitting the intermittent rotation of the feed members I prefer to employ, as hereinbefore stated, suitable escapements, and these may be operated in the present machine directly from the keyboard. These escapements may be advantageously mounted on parallel cylindrical carriers 23 and 24, (see Fig. 6,) journaled at their ends in the opposite sides of the casing, each carrier supporting two escapements, one for each of the coupling mechanisms. All of these escapements are substantially identical in construction and but one of them will be described in detail, the corresponding parts of the others being designated by appropriate prime-marks.

The escapement *e* is loosely mounted upon the carrier 24 and has stop-faces adapted to coöperate with corresponding faces on the stop-arms 10. Instead, however, of employing ordinary pallets, the stop-faces of the escapement are in the form of frictionally-clutching members or forks, such as 25 and 26, each of these forks having the inner sides of its holding-arms diverging and constructed so as to engage the stop-arms 10 and to exert upon the same a gradually-increasing resistance, to thereby gradually check the feed member and stop the same without noise or shock. The upper fork of the escapement is preferably so shaped as to have a frictional action somewhat greater than that of the fork 26, and it may also have the inner face of its holding-arms flared out somewhat, as shown in Fig. 26, to form a stop-wall 27, with which the stop-arm of the feed member will come into contact, the construction being such that when the stop-arm is first engaged by the fork 25 its movement will be gradually or positively checked, and when it has been brought almost to a stop it will be released from the holding-faces of the fork and will be stopped against the back wall 27 between the arms of the fork. It will be obvious that on the depression of a key (see Figs. 7 and 8) the fork 25 will be readily withdrawn, without sticking, from the stop-arm 10 which it engages, thus permitting the key to be operated by the exertion of a slight pressure thereon.

The fork 26, with which the arm 10 engages first on the actuation of a key-lever, may be so shaped as to frictionally engage the stop-arm throughout the entire length of the holding-faces thereof, it being apparent that the feed movement of the member 9 due to the operation of a key-lever will in each instance be made up of two successive movements, on the first of which that arm 10 which is in engagement with the fork 25 is released and

immediately thereafter clutched by the fork 26 and on the second of which said arm is released from the fork 26 and the next succeeding arm is clutched by the fork 25, each of these movements being substantially an eighth of a rotation of the feed member, and the whole feed movement resulting from the depression of a key being a one-fourth turn of the feed member, the first half being due to the depression of the key-lever and the second to the ascent of the latter on the release thereof. Each escapement will have a suitable operating-arm, such as 28, controlled by a connecting-rod 29, hinged in the present instance to the proper one of a series of universal bars, in this case the universal bar 30. Four of these universal bars are shown in the drawings, (see Fig. 5,) and they are designated, respectively, by 30, 30′, 30″, and 30‴. These universal bars are preferably U-shaped frames of different sizes, constructed so as to lie in parallelism with one another, and all of them are loosely mounted for oscillation on a carrier 31, supported by the sides of the casing C. The same carrier has loosely mounted thereon the usual key-levers L, nine of these being shown in the drawings, although it is obvious that a greater number might be employed. These key-levers are passed through suitable slots 32 in the forward side of the casing and are normally in contact with the universal bar or bars which they are designed to operate, suitable springs 33 being employed for holding the key-levers up against the upper walls 32′ of the slots 32, while a heavier spring 34 maintains the universal bars in their normal position.

Each of the key-levers L may operate any desired number of the universal bars, but as the adding-machine shown in the present application is designed to add together the units from "1" to "9," inclusive, the key-levers so numbered in Fig. 5 are represented in Figs. 9 to 17, respectively, as coöperating with the universal bars corresponding to the feed values denoted, respectively, by the numerals of the key-levers—that is to say, the key-lever shown in Fig. 9 operates the universal bar 30′, controlling that feed member which imparts to the proper orbitally-movable driving element or pinion of the gear-train a feed movement of one unit, while the key-lever shown in Fig. 10 actuates the universal bar 30, controlling a pinion having a feed movement of two units. The key-lever shown in Fig. 12 operates the universal bar 30‴, controlling a pinion having a feed movement of four units, and the key-lever shown in Fig. 13 actuates the universal bar 30″, controlling an orbitally-movable pinion having a feed movement of five units, the remaining key-levers—viz., those shown in Figs. 11, 14, 15, 16, and 17—operating, respectively, two or more universal bars controlling orbitally-movable pinions whose combined feed movements correspond to the respective remaining multiples of the unit of movement.

While all of the feed members 9, 9′, 9″, and 9‴ may advantageously have equal movements on the operation of their respective universal bars, yet each of them will in the present adding-machine transmit to the pinion controlled thereby an orbital movement of different extent from the corresponding movements of the other pinions, and hence having a correspondingly different feed value.

In the present organization the movements of the respective feed members are transmitted to the gear-train as follows: The feed member 9′ rotates the shaft 8, which has secured thereto at the opposite end thereof a pinion 35, in mesh with a spur-gear 36, sleeved on a shaft 37, mounted at its opposite ends in the right-hand side of the casing and in the block 2, respectively, the long sleeve or hub 36′ of this gear having secured thereto a pinion 38, which drives the proper pinion-carrier or gear of the adding-train. The feed member 9 is secured directly to a pinion 39, loosely mounted on the shaft 8 and in mesh with a spur-gear 40, also supported by the shaft 37, this latter gear having a long hub 40′, which has secured thereto a pinion 41, which drives another pinion-carrier or gear of the gear-train, a sleeve 42 being preferably employed for positioning the hubs 36′ and 40′ and the pinions and gears carried thereby. The feed member 9″ is loosely mounted on the shaft 7 and has clamped on a long hub thereof a gear 43, which drives directly another pinion-carrier of the gear-train, while the feed member 9‴ is in the present case keyed directly to the shaft 7, which has clamped to the opposite end thereof another gear 44, which also drives directly another pinion-carrier of the gear-train. This gear-train is supported by a driven shaft 45, which is also mounted at its opposite ends in bearings in the right-hand side of the casing C and in the block 2, respectively. All of the actuators or gears that operate the orbitally-movable driving elements or revoluble gears controlling the respective feed movements which the gear-train is capable of transmitting are preferably and in the present case loosely supported on the shaft 45 for rotation independently of one another or selectively in any desired combination. These independently-rotative actuators or driving elements are designated, respectively, by 50, 51, 52, and 53, and except in the number of peripheral teeth formed thereon are substantially similar in construction and operation. Each of these driving elements or actuators is preferably in the form of an annular spur-gear and will carry one or more orbitally-movable gears or pinions, preferably three in number, having their rotary movements transverse to the direction of their orbital movements. The several sets of pinions are designated, respectively, by 60, 61, 62, and 63, to correspond to the numerals of the annular spur-gears on which they are supported.

By reference to Figs. 18 and 19 it will be

seen that these revoluble driving elements are preferably beveled pinions disposed equidistantly from one another and supported for rotation on carrier-pins 46, screw-threaded at their outer ends and seated in correspondingly-threaded bores in lugs 47, projecting inwardly from the annular portion of the gear, the inner ends of these pins being held in place by and serving to position a central bearing 48, adapted to form the journal for the gear. This bearing is preferably hexagonal in contour, its alternate peripheral faces serving, in connection with the corresponding inner faces of the lugs 47, to positively position the bevel-pinions on the pins 46.

The revoluble rotary pinions carried by each of the gears or pinion-carriers 50, 51, 52, and 53 should be operatively connected with the corresponding pinions of the next succeeding pinion-carrier in such a manner that the rotation of any one group of pinions carried by a single driving element may be transmitted to any succeeding series of pinions carried by another driving element. In the present case the operative connecting devices are a series of rotary gears, preferably bevel-gears, and these are designated, respectively, by 71, 72, 73, 74, 75, and 76, while corresponding bevel-gears are illustrated at 70 and 77 at the extreme ends of the gear-train, the former serving as a resistance driving-gear and the latter operating, in the present organization, as a driven gear for imparting movement to the operated mechanism or devices. The gears 71 to 76, inclusive, are conveniently constructed in pairs as double gears having bevel-teeth on both faces thereof, thus economizing space in the gear-train and simplifying the construction, and the gears of this series, as well as the revoluble gears or pinions whose movements they transmit, are organized to serve both as driving elements and as driven elements of the train. If, for example, the actuator 50 is rotated, this gear will revolve the pinions carried thereby, and therefore the pinions will be rotated by the resistance driving-gear 70, with the teeth of which they are in mesh. Now, if the gears 51, 52, and 53 are held against rotation, it will be apparent that the movements of the pinions will be transmitted, through the gears 71 and 72, to the pinions 61, and so on by the other bevel-gears and pinions to the driven gear 77, which will be rotated at exactly the same speed as the double gear 71 72, owing to the fact that the pinions 61, 62, and 63, while rotating, will be held against revolution. If, however, any two or more of the gears 50, 51, 52, and 53 be rotated simultaneously—as, for example, the gears 50 and 51—the pinions 61 will not only be rotated by the pinions 60 and the gears 71 and 72, but will also be revolved orbitally by the gear 51, and the pinion 61 will be rotated at a rate of speed as much in excess of that of the pinions 60 as the sum of the orbital movements of the pinions 60 and 61 is in excess of the orbital movement of the pinion 60. In like manner if, for example, all the gears 50, 51, 52, and 53 are operated simultaneously by the release of the proper keys the rotation of the pinions 60 will be transmitted to the pinions 61, which in turn will have their rotative movements accelerated by the rotation of the gear 51 and will transmit their rotation to the pinions 62, which will rotate at an accelerated rate of speed by reason of the operation of the gear 52, and will then transmit their movements to the pinions 63, which will rotate at a further-accelerated rate of speed owing to the rotation of the gear 53. In this case, therefore, the pinions 63 will be rotated at a rate of speed equal to the sum of the movements which the pinions 61, 62, and 63 would have if each set of pinions were rotated separately by its carrier while all of the other pinion-carriers were held against movement—that is to say, if the orbital movement of the pinions 61, when the proper key-lever is depressed, represents the unit of feed movement, while the orbital movements of the pinions 63, 60, and 62 represent, respectively, two, four, and five times the unit of feed movement when all of said pinions are simultaneously actuated orbitally, the pinions 63 will rotate twelve times as fast as the pinions 61 would rotate if the gear 51 only were actuated. It therefore follows that the gear-train hereinbefore described constitutes an adding-train or accumulator-train in which the orbitally-movable rotary driving elements or bevel-pinions, while rotative in sets independently of one another, are also selectively rotative in combination with one another to add together or accumulate the orbital movements of the individual sets of pinions, and that these sets of pinions constitute orbital speed-accumulating driving elements capable of accumulating speed by receiving and transmitting whatever rate of rotation may be imparted to them and by accelerating this speed of rotation by an amount equal to their respective rotative movements when rotated independently. In each case, of course, the acceleration of the rotation of any set of pinions will be due to the fact that while the preceding bevel-gear with which they are in mesh is rotated by other pinions and transmits such rotation to pinions of the succeeding set, yet such bevel-gear constitutes also a resistance driving-gear with respect to the pinions which it drives controlling all of that rate of rotation of the pinions of said set which is in excess of the rate imparted when the bevel-gear and the pinions operated thereby mesh freely, the orbital movement of such operated pinions causing the bevel-gear to become effective as a resistance-gear for increasing the speed of rotation of these pinions by an amount proportionate to such orbital movement.

Any suitable driven means may be controlled by the rotation of the several sets of orbitally-movable driving elements or pin-

ions, but, as before stated, I prefer to actuate a driven shaft, such as 45, from the terminal bevel-gear 77 of the train, this shaft being journaled at its outer end in a long hub 70′ of the fixed driving-gear 70 and carrying a pinion 80, in mesh with an idler 82, which may transmit its movements to a large spur-gear 83, loosely mounted on the right-hand end of a shaft 84, journaled in bearings in brackets or extensions 85, projecting from the upper forward end of the machine. This shaft 84 preferably has secured thereto between the brackets 85 an indicating cylinder or drum 86, which may be keyed fast to the shaft and has a peripheral spiral groove 86′ extending therearound from end to end thereof. Above the brackets 85 is a pair of bearings supporting a cylindrical carrier 88, on which is mounted for sliding movement an indicator 89, having a pointer 89′, and a suitable pin 89″ for engaging the walls of the groove 86′ and following the same as the cylinder rotates. This cylinder may have suitable indicating-divisions—as shown, for example, in Fig. 3 and numbered from "0" to "500"—each division representing a single unit of feed value, the reducing-gears 80, 82, and 83 being so proportioned that the gear-wheel 83 will rotate the space of one tooth for each unit of feed movement, there being fifty teeth in the periphery of this gear and fifty units of indication for each turn on the cylinder 86.

After the cylinder has been rotated until the pointer 89′ comes opposite the indication "500" thereon the shaft 84 may be uncoupled from the gear 83 and rotated in the opposite direction to carry the pointer back to "0," or the pointer may be moved back from the indication "500" to any point in advance thereof or from any indication on the cylinder to a preceding one. The shaft 84 is preferably coupled to the gear 83 by means of a spring-pressed bolt carried by a crank-arm 90, keyed to the shaft, the face of the gear being in the nature of a disk having equidistant pin-holes, one for each tooth of the gear 83, in which perforations the end of the locking-bolt is adapted to be received. This locking device comprises a small barrel 91 at the end of the arm 90, in which barrel a bolt 92 is adapted to work, a spring being employed between the closed end of the barrel and the enlarged portion 92′ of the bolt, while the outer end of said bolt is screw-threaded to receive a cap 93, slidable on the barrel 91 and serving as a handle for turning the crank 90.

As has been hereinbefore described, the key-levers L coöperate with the universal bars so as to operate the latter selectively, one or more at a time, and these key-levers may have, as shown in the drawings, (see particularly Figs. 9 to 17, inclusive,) depending fingers *l*, the working face of each of which is of sufficient length to engage and operate the desired universal bar or bars, but is not long enough to interfere with the universal bar or bars which it is not intended to actuate, these fingers having their working faces continuous when they are designed to actuate two adjacent universal bars and having said faces separated by a suitable recess when actuating non-adjacent universal bars.

The orbital movements of the independently-revoluble pinions are controlled, as before stated, by individually-operative selectors, and while any form of selector device or mechanism may be employed that will control the operation of one or more of the driving elements or pinions to the exclusion of the other said driving elements or pinions, yet in this case each selector embodies the following elements—viz., clutch devices adapted to engage a continuously-rotating main driver, connecting means for transmitting the rotation of the clutch devices to the proper driving element or pinion, an escapement for permitting the clutch devices to engage the main driver intermittently, and key-operated devices, preferably including one or more universal bars, for operating such escapement by itself or for operating said escapement and one or more other escapements simultaneously.

The operation of my improved adding-machine will be apparent from the foregoing description. It being understood that the pulley P is continuously rotating the main shaft D and the gears 4, 5, and 6, it will be seen that on the depression of any one of the key-levers—for example, the key-lever designated by 2 in Fig. 5—the selector mechanism corresponding thereto will at once release the proper feed member and the corresponding friction-ring will instantaneously clutch the driving means and cause the actuation of the proper gear of the series 50, 51, 52, and 53. For instance, on the depression of the key 2 the universal bar 30 will be actuated and the escapement *e* oscillated from the position shown in Fig. 7 to that shown in Fig. 8, the arm 10, which is held against rotation by the back wall 27 of the spring-fork 25, (see Fig. 26,) being released by the withdrawal of said fork to the position shown in Fig. 8 and turning one-eighth of a rotation, whereupon it is momentarily stopped by engaging between the arms of the fork 26; but as soon as the finger is removed from the key the springs 33 and 34 will cause the key-lever to rise and withdraw the fork 26 from engagement with the stop-arm 10, and at the same time carry the fork 25 into position to clutch and stop the next succeeding arm 10 of the feed member. It will be understood, of course, that on the release of said key-lever the stop-arm 10 will not only rotate another one-eighth of a turn, but that this partial rotation will also aid in returning the escapement to the position shown in Fig. 7. As the spur-wheel 6 rotates continuously, it will be obvious that the coupling or friction ring will clutch the hub of said gear instantaneously, as the tension exerted by the connector 13 is such as to assure a very sensitive action of these parts. The

feed member 9 when coupled to the gear 6 rotates the shaft 8, the pinion 35, the spur-gear 36, the pinion 38, and the gear 51, whereupon the pinions 61 revolve in their orbit and transmit their rotative movements to the gears 73 and 74, pinions 62, gears 75 and 76, the pinions 63, the gear 77, the shaft 45, the pinion 80, the idler 82, the gear 83, the shaft 84, and the indicating drum or cylinder 86, which rotates a distance of two unit indications and records a feed value of two units on said cylinder by the traveling of the indicator 89 and its pointer 89′ along the carrier 88. The depression of any other key will operate in a similar manner to transmit to said indicating-cylinder a rotary movement corresponding to the number of feed units represented by the key-lever so depressed, it being understood that when any two or more of the universal bars are operated simultaneously by the actuation of a key-lever a corresponding number of gears of the series 50, 51, 52, and 53 will be rotated and the orbital movements of the revoluble pinions carried thereby added together and the rotation of any desired set of operated pinions correspondingly accelerated by imparting thereto an orbital movement, which, as hereinbefore described, will carry the pinions in an orbital path and cause the next preceding bevel-gear to act not only as a rotatable transmitting element, but also as a resistance driving-gear.

It should be noted that all of the gears which transmit the movements of the gears 5 and 6 should be so proportioned that, whatever the extent to which the driving member is to be rotated, the gear 77 will always rotate a distance of one tooth or an exact multiple thereof.

Having described my invention, I claim—

1. The combination, with a plurality of normally idle, independently-rotatable driving elements having determined feed movements; of a plurality of individually-operative driving-element-controlling selectors, at least one of said selectors controlling a determined plurality of said driving elements, and each remaining selector controlling a determined number of said driving elements.

2. The combination, with a plurality of normally idle, independently-rotatable driving elements having determined feed movements; of a plurality of keys controlling the rotation of said driving elements, at least one of said keys controlling a determined plurality of said driving elements, and each remaining key controlling a determined number of said driving elements.

3. The combination, with a plurality of independently orbitally-movable, operatively-connected, orbital speed-accumulating rotary driving elements; of a plurality of individually-operative, driving-element-controlling selectors, at least one of said selectors controlling the orbital movements of a determined plurality of said driving elements, and each remaining selector controlling a determined number of said driving elements.

4. The combination, with a plurality of normally idle, independently-rotatable driving elements having determined feed movements, of continuously-rotative main driving means; a plurality of individually-operative coupling-selectors for selectively coupling said driving elements and said main driving means, at least one of said selectors controlling the coupling of a determined plurality of said driving elements, and each remaining selector controlling the coupling of a determined number of said driving elements; and driven means operable by said driving elements.

5. The combination, with a plurality of independently orbitally-movable, operatively-connected, orbital speed-accumulating rotary driving elements, of continuously-rotative main driving means; a plurality of individually-operative, frictionally-coupling selectors for selectively coupling said driving elements and said main driving means, at least one of said selectors controlling the coupling of a determined plurality of said driving elements, and each remaining selector controlling the coupling of a determined number of said driving elements; and driven means operable by said driving elements.

6. The combination, with a plurality of normally idle, independently-rotatable driving elements having determined feed movements, of continuously-rotative main driving means; a plurality of individually-operative, coupling and uncoupling selectors for selectively coupling and uncoupling said driving elements and said main driving means, at least one of said selectors controlling the coupling and uncoupling of a determined plurality of said driving elements, and each remaining selector controlling the coupling and uncoupling of a determined number of said driving elements; and driven means operable by said driving elements.

7. The combination, with a plurality of normally idle, independently-rotatable driving elements having determined feed movements, of continuously-rotative main driving means; a plurality of key-operated coupling-selectors for selectively coupling said driving elements and said main driving means, at least one of said selectors controlling the coupling of a determined plurality of said driving elements, and each remaining selector controlling the coupling of a determined number of said driving elements; and driven means operable by said driving elements.

8. The combination, with a plurality of normally idle, independently-rotatable driving elements having determined feed movements; of key-operated escapements for said respective driving elements, at least one key controlling a determined plurality of said driving elements, and each remaining key con-

trolling a determined number of said driving elements; and driven means operable by said driving elements.

9. The combination, with a gear-train comprising a plurality of coöperative gears having a determined plurality of said gears selectively operable independently of one another and of others of said train; of a plurality of keys, at least one of said keys controlling a determined plurality of said independently-operable gears, and each remaining key controlling a determined number of such gears.

10. The combination, with a plurality of operatively-connected pairs of gears; of a plurality of independently-revoluble pinions connecting, respectively, the respective gears of each said pair, and each revoluble in the orbits of the gears of its pair and rotatable transversely to its orbital movement; a plurality of selectively-operative, pinion-revolving pinion-carriers; continuously-rotative main driving means; and a plurality of pinion-carrier-coupling selectors for intermittently coupling said pinion-carriers and said driving means during the rotation of the latter.

11. The combination, with a plurality of operatively-connected pairs of gears; of a plurality of independently-revoluble pinions connecting, respectively, the respective gears of each said pair, and each revoluble in the orbits of the gears of its pair and rotatable transversely to its orbital movement; a plurality of selectively-operative, pinion-revolving pinion-carriers; continuously-rotative main driving means; and a plurality of key-controlled coupling-selectors for intermittently coupling said pinion-carriers and said driving means during the rotation of the latter.

12. The combination, with a plurality of operatively-connected pairs of gears; of a plurality of independently-revoluble pinions connecting, respectively, the respective gears of each said pair, and each revoluble in the orbits of the gears of its pair and rotatable transversely to its orbital movement; a plurality of selectively-operative, pinion-revolving pinion-carriers; continuously-rotative main driving means; and a plurality of key-controlled coupling-selectors for intermittently coupling said pinion-carriers and said driving means during the rotation of the latter, at least one of said selectors controlling a determined plurality of said pinion-carriers, and each remaining selector controlling a determined number of said pinion-carriers.

13. The combination, with a plurality of universal bars and with driving means controlled thereby, of a plurality of keys, at least one of said keys controlling a determined plurality of said universal bars, and each remaining key controlling a determined number of universal bars.

14. The combination, with a plurality of universal bars and with driven means controlled thereby; of a plurality of key-levers, at least one of said key-levers controlling a determined plurality of said universal bars, and each remaining key-lever controlling a determined number of universal bars.

15. The combination, with a plurality of orbitally-movable, operatively-connected, orbital speed-accumulating rotary driving elements; of driving-element-controlling universal bars, one for each driving element; and a plurality of key-levers, at least one of said key-levers controlling a determined plurality of said universal bars, and each remaining key-lever controlling a determined number of universal bars.

16. The combination, with a plurality of orbitally-movable, operatively-connected, orbital speed-accumulating rotary driving elements; of continuously-rotative main driving means; universal-bar-operated coupling devices for coupling said respective driving elements and said main driving means; a plurality of universal bars, one for each of said driving elements; and a plurality of key-levers, at least one of said key-levers controlling a determined plurality of said universal bars, and each remaining key-lever controlling a determined number of universal bars.

17. The combination, with a plurality of orbitally-movable, operatively-connected, orbital speed-accumulating rotary driving elements, of continuously-rotative main driving means; universal-bar-operated coupling and uncoupling devices for coupling and uncoupling said respective driving elements and said main driving means; a plurality of universal bars, one for each of said driving elements; and a plurality of key-levers, at least one of said key-levers controlling a determined plurality of said universal bars, and each remaining key-lever controlling a determined number of universal bars.

18. The combination, with a friction-clutch comprising a continuously-rotative driver and a frictionally-rotated driven member in frictional sliding contact with said driver, of an escapement controlling the rotation of said driven member.

19. The combination, with a friction-clutch comprising a continuously-rotative driver and a frictionally-rotated driven member in frictional sliding contact with said driver, of a key-operated escapement controlling the rotation of said driven member.

20. The combination of a rotary feed member and an escapement having coöperative frictionally-clutching stop-faces.

21. The combination of a rotary feed member and an escapement operative in corresponding planes and having coöperating frictionally-clutching stop-faces.

22. The combination with a rotary feed member having stop-faces, of an escapement

having a pair of frictionally-clutching forks coöperative with the stop-faces of said feed member.

23. The combination with a rotary feed member having wedge-shaped stops; of an escapement having a pair of frictionally-clutching forks coöperative with the stops of said feed member, said forks having their holding-faces diverging toward said stops.

24. The combination with a continuously-rotative driver, of a divided friction-ring encircling said driver; and a resilient connector joining the divided ends of said friction-ring and normally tending to draw said ends together; and means for holding and releasing said friction-ring.

25. The combination with a continuously-rotative driver, of a divided friction-ring encircling said driver; a resilient connector joining the divided ends of said friction-ring and encircling said ring and normally tending to draw said ends together; and means for holding and releasing said friction-ring.

26. The combination, with a plurality of orbitally-movable, operatively-connected, orbital speed-accumulating rotary driving elements; of a plurality of individually-operative, driving-element-controlling selectors, at least one of said selectors controlling a determined plurality of said driving elements, and each remaining selector controlling a determined number of said driving elements; a driven shaft operatively connected with the terminal driving element; and an indicating device operable by said driven shaft.

27. The combination, with a plurality of orbitally-movable, operatively-connected, orbital speed-accumulating rotary driving elements; of a plurality of individually-operative driving-element-controlling selectors, at least one of said selectors controlling a determined plurality of said driving elements, and each remaining selector controlling a determined number of said driving elements; a driven shaft; coupling devices for connecting said driven shaft to, and disconnecting it from, the terminal driving element; and an indicating device operable by said driven shaft.

FRANCIS H. RICHARDS.

Witnesses:
FRED. J. DOLE,
F. N. CHASE.