US 20120006771A1

(19) United States

(12) Patent Application Publication

Miller, JR. et al.

(10) Pub. No.: US 2012/0006771 A1

(43) Pub. Date: Jan. 12, 2012

(54) **PRODUCT MERCHANDISING SYSTEM FOR WALK-IN DISPLAY COOLERS AND THE LIKE**

(75) Inventors: **Donald J. Miller, JR.**, Belleville, IL (US); **Robert E. Kreutzer, JR.**, Columbia, IL (US); **Andrew J. Boron**, Belleville, IL (US); **Sean W. Luaders**, O'Fallon, MO (US)

(73) Assignee: **PRESENCE FROM INNOVATION, LLC**, St. Louis, MO (US)

(21) Appl. No.: **13/236,055**

(22) Filed: **Sep. 19, 2011**

Related U.S. Application Data

(62) Division of application No. 12/259,882, filed on Oct. 28, 2008, now Pat. No. 8,020,714.

(60) Provisional application No. 60/984,037, filed on Oct. 31, 2007.

Publication Classification

(51) **Int. Cl.**
A47F 1/04 (2006.01)

(52) **U.S. Cl.** **211/59.2**

(57) **ABSTRACT**

A product merchandising unit having a plurality of shelf members adjustably positionable within a framework structure, each shelf member including a plurality of retractable pin members selectively movable for engagement with openings associated with the framework structure, and a plurality of removably attachable divider members engageable with the underneath portion of each shelf member anywhere along substantially their entire width, the divider members extending downwardly from the shelf member located thereabove into the product display space of the shelf member located therebelow forming product channels for guiding products therebetween, each divider member being selectively adjustable relative to another divider member to control and adjust the width of each product channel.

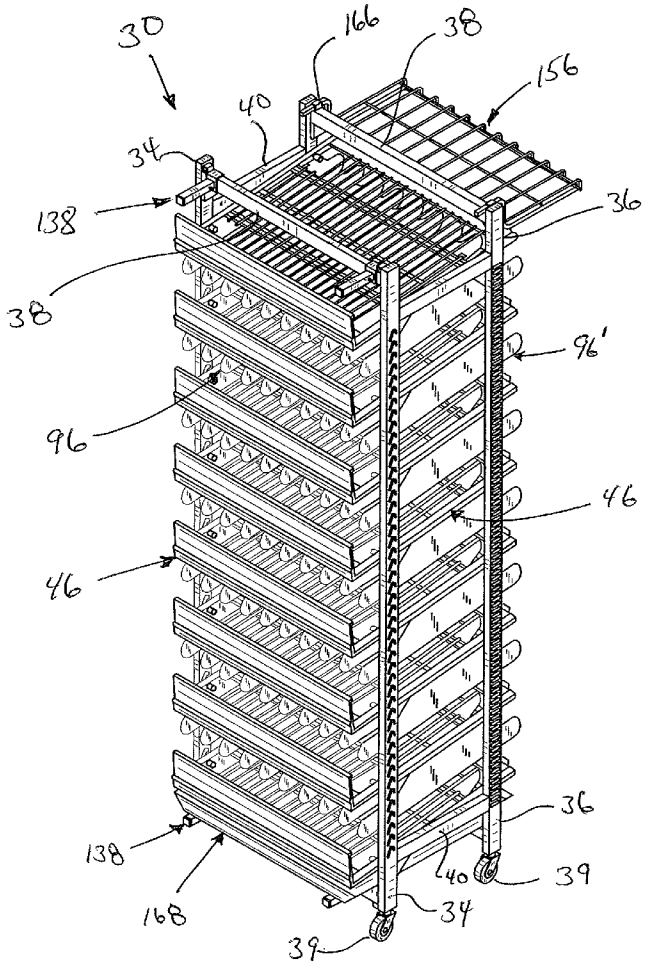

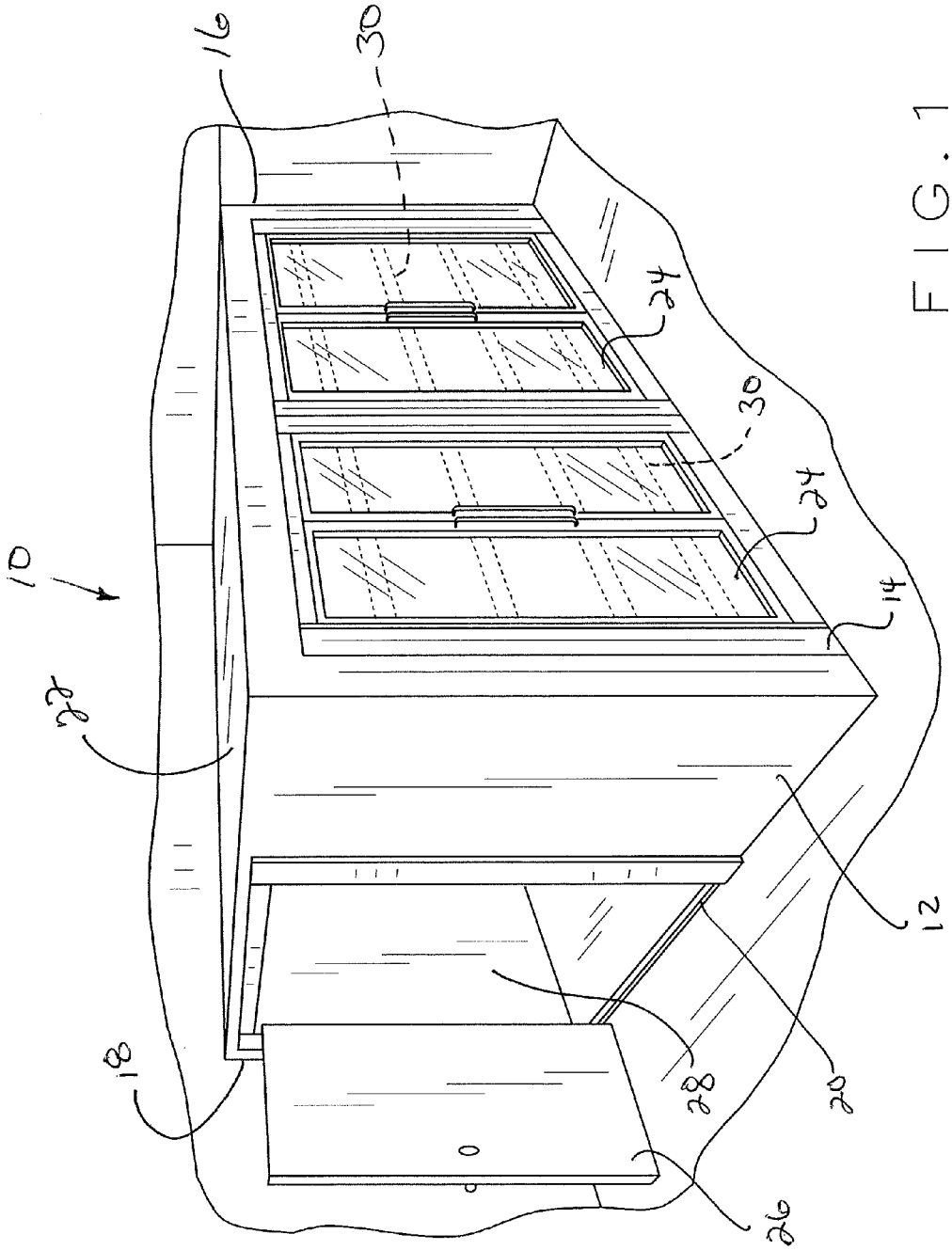

FIG. 1

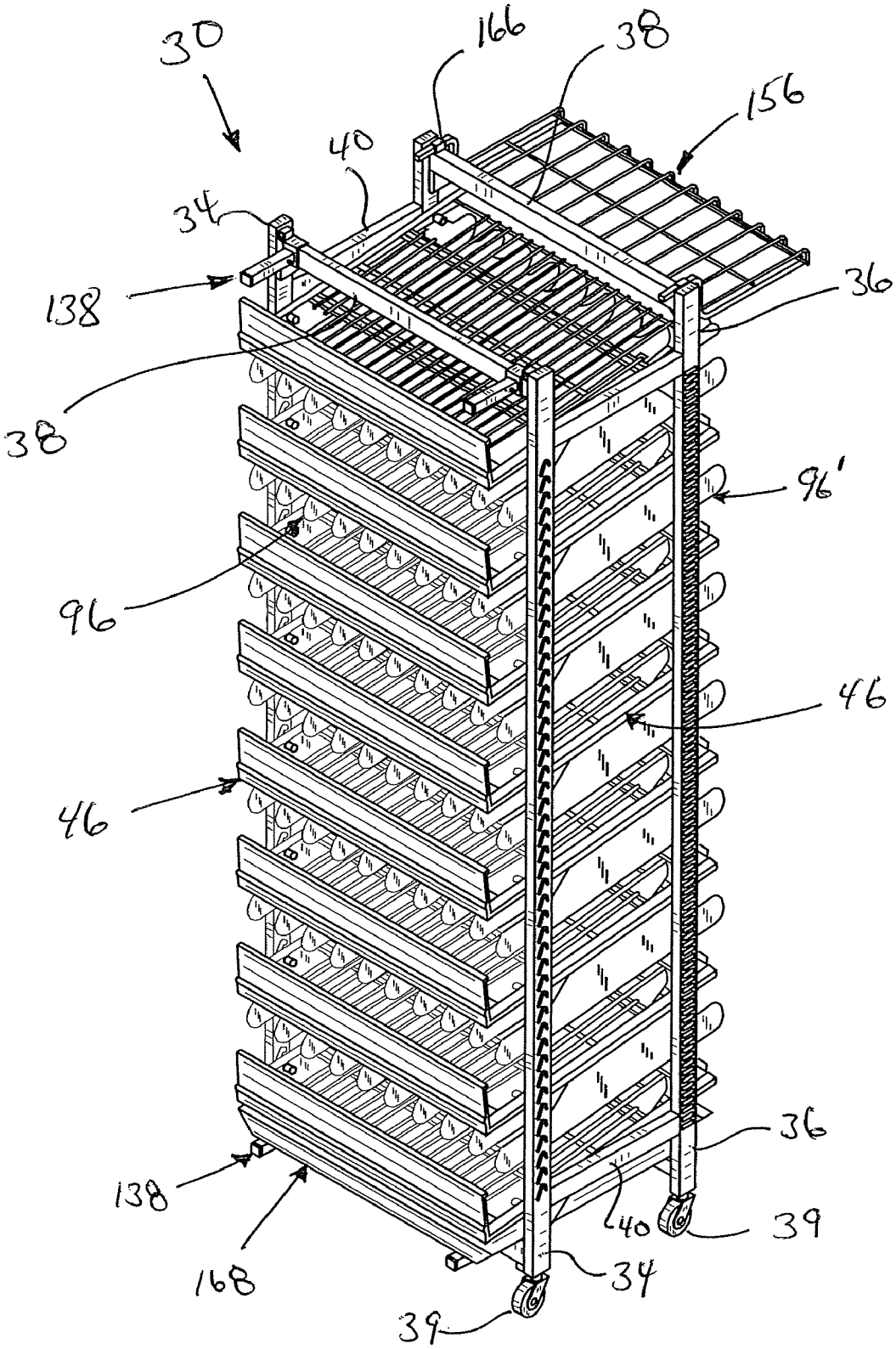

FIG. 2

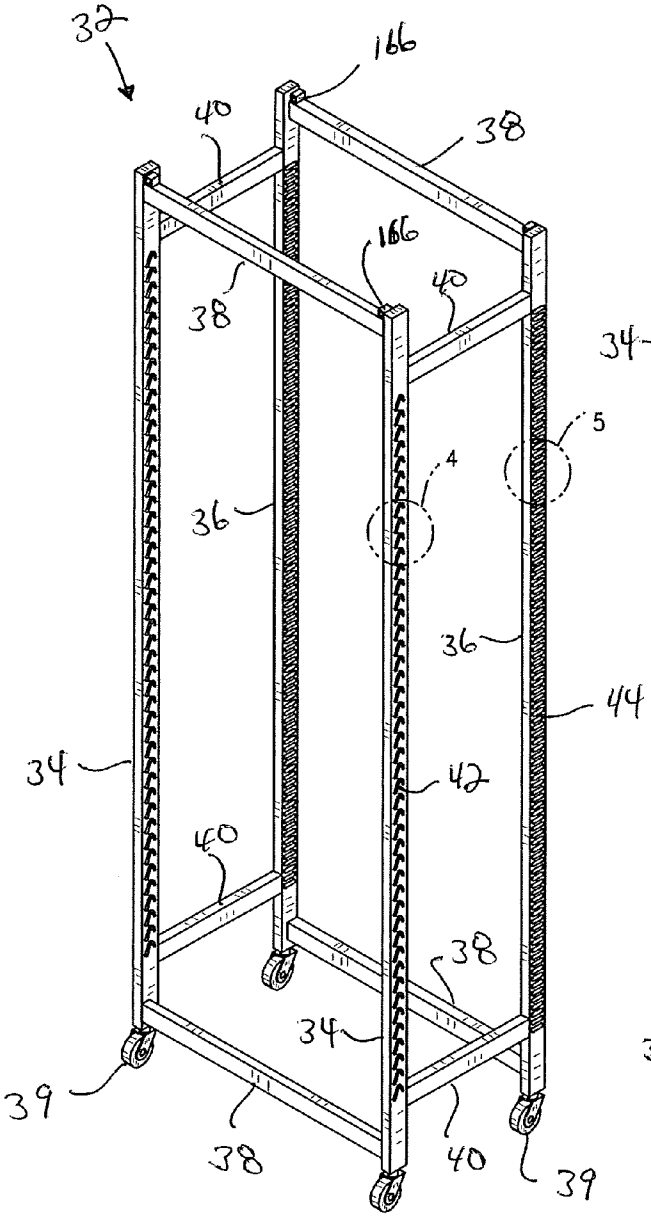

FIG. 3

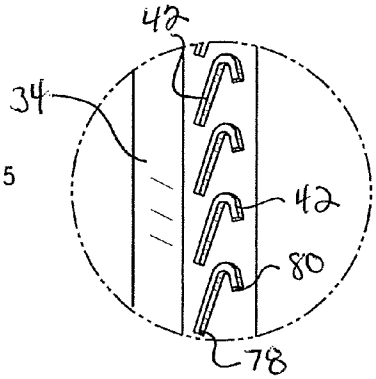

FIG. 4

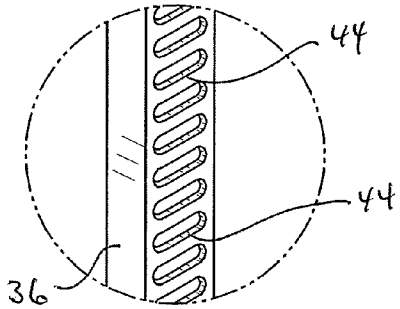

FIG. 5

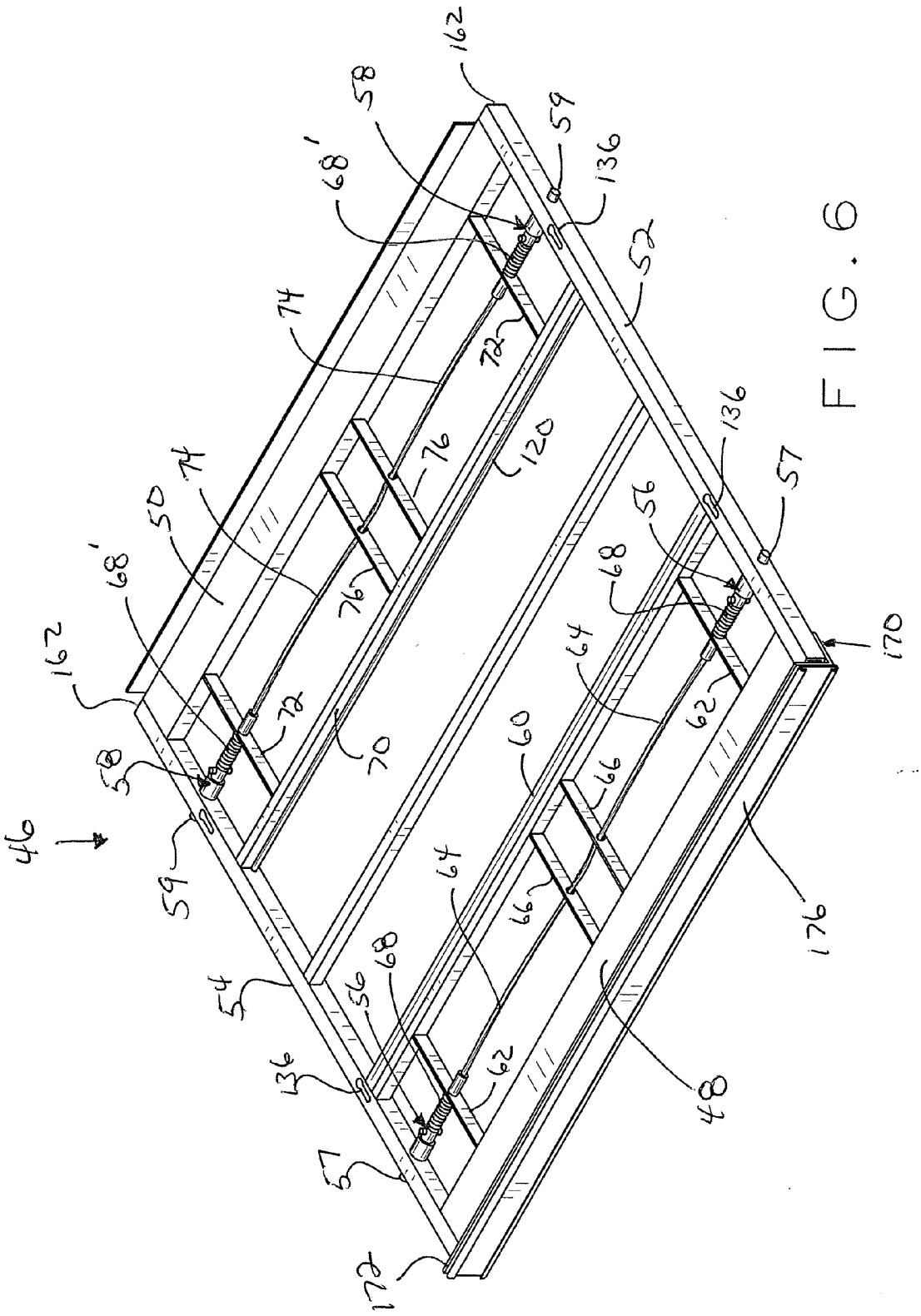
46
48
50
52
54
56
57
58
59
60
62
64
66
68
68'
70
72
74
76
120
136
162
170
176
178

FIG. 6

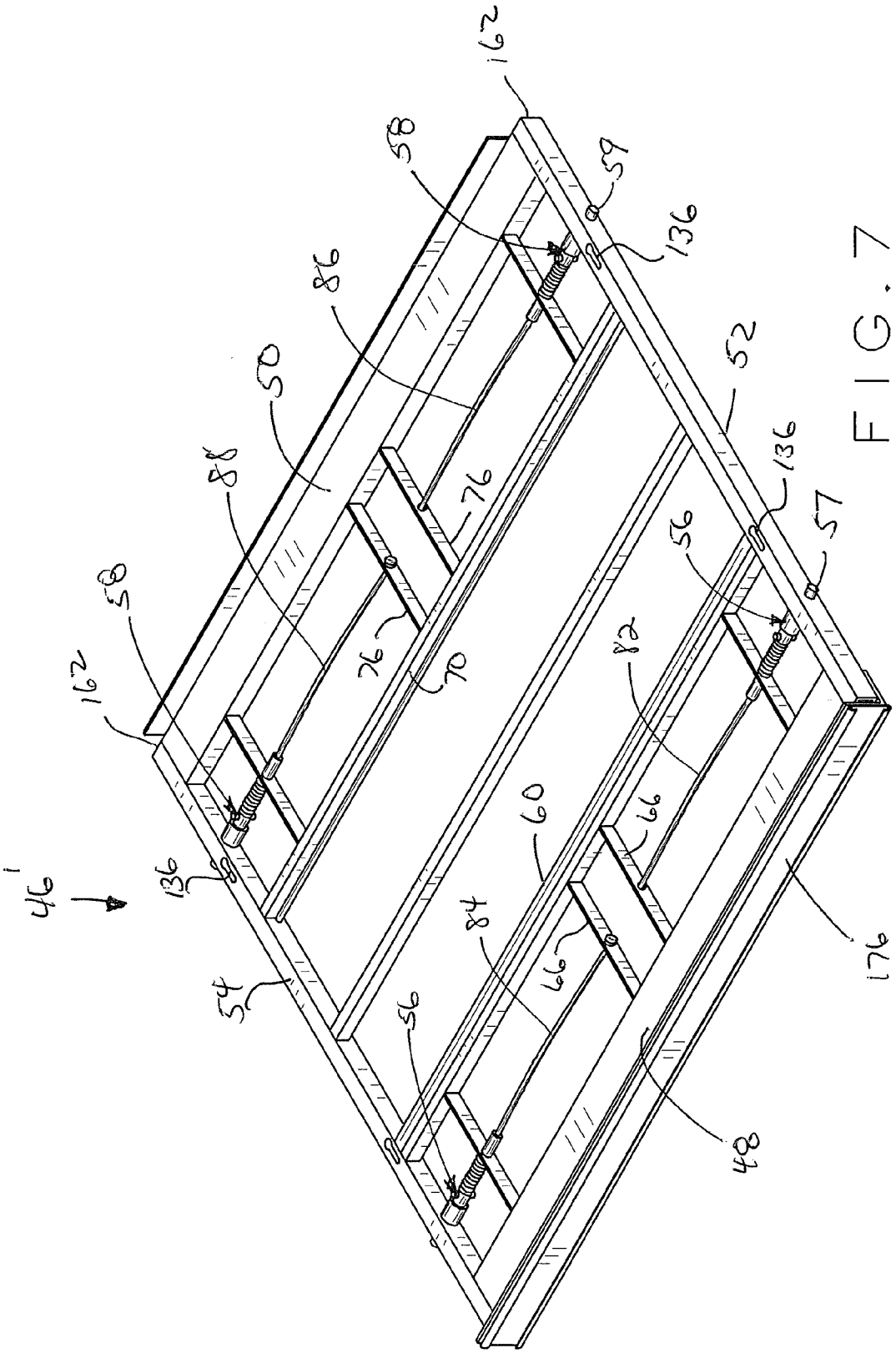
162
58
59
136
86
50
52
88
76
136
57
56
58
162
76
70
82
60
66
46'
136
84
66
176
54
56
48

FIG. 7

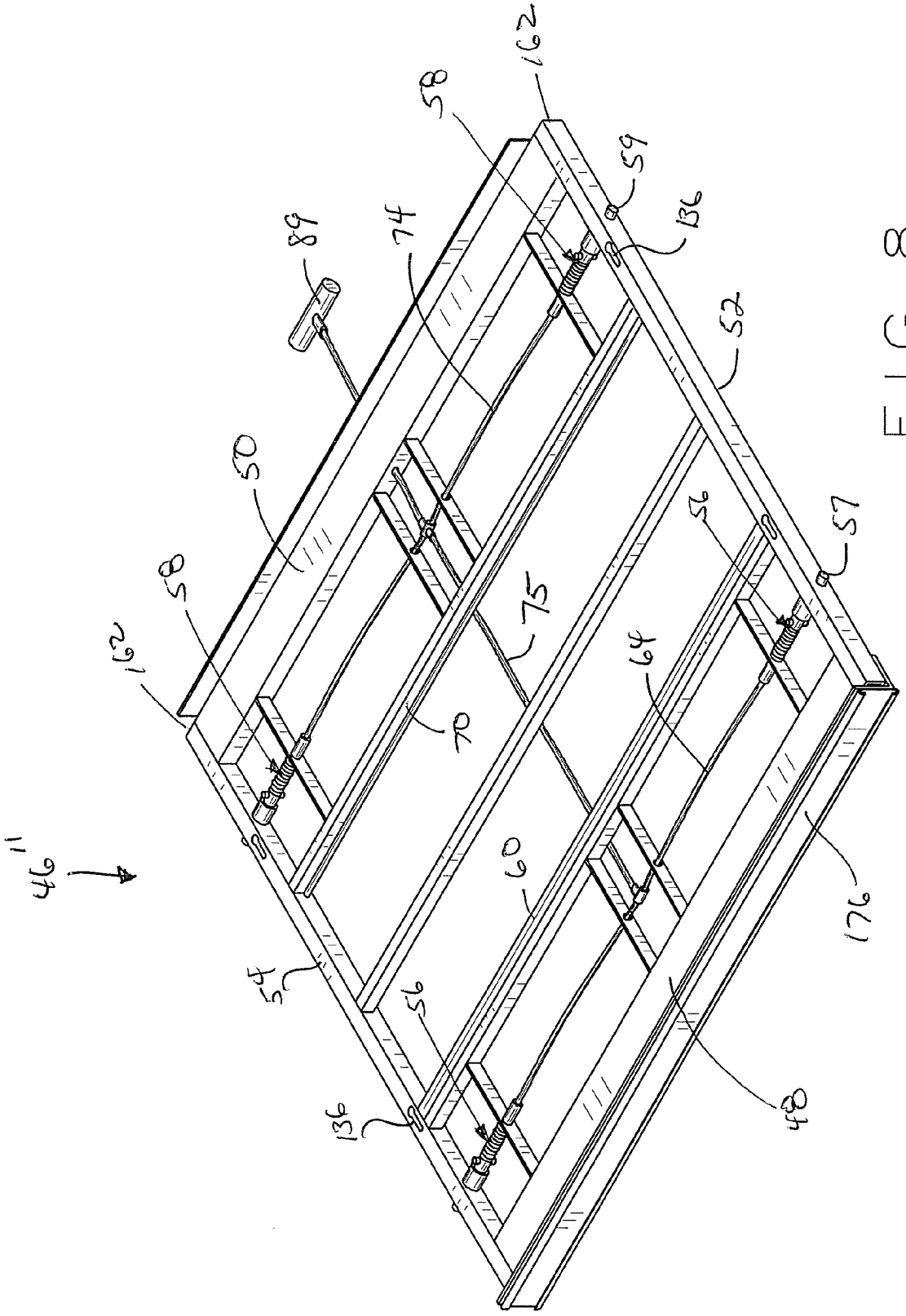

FIG. 8

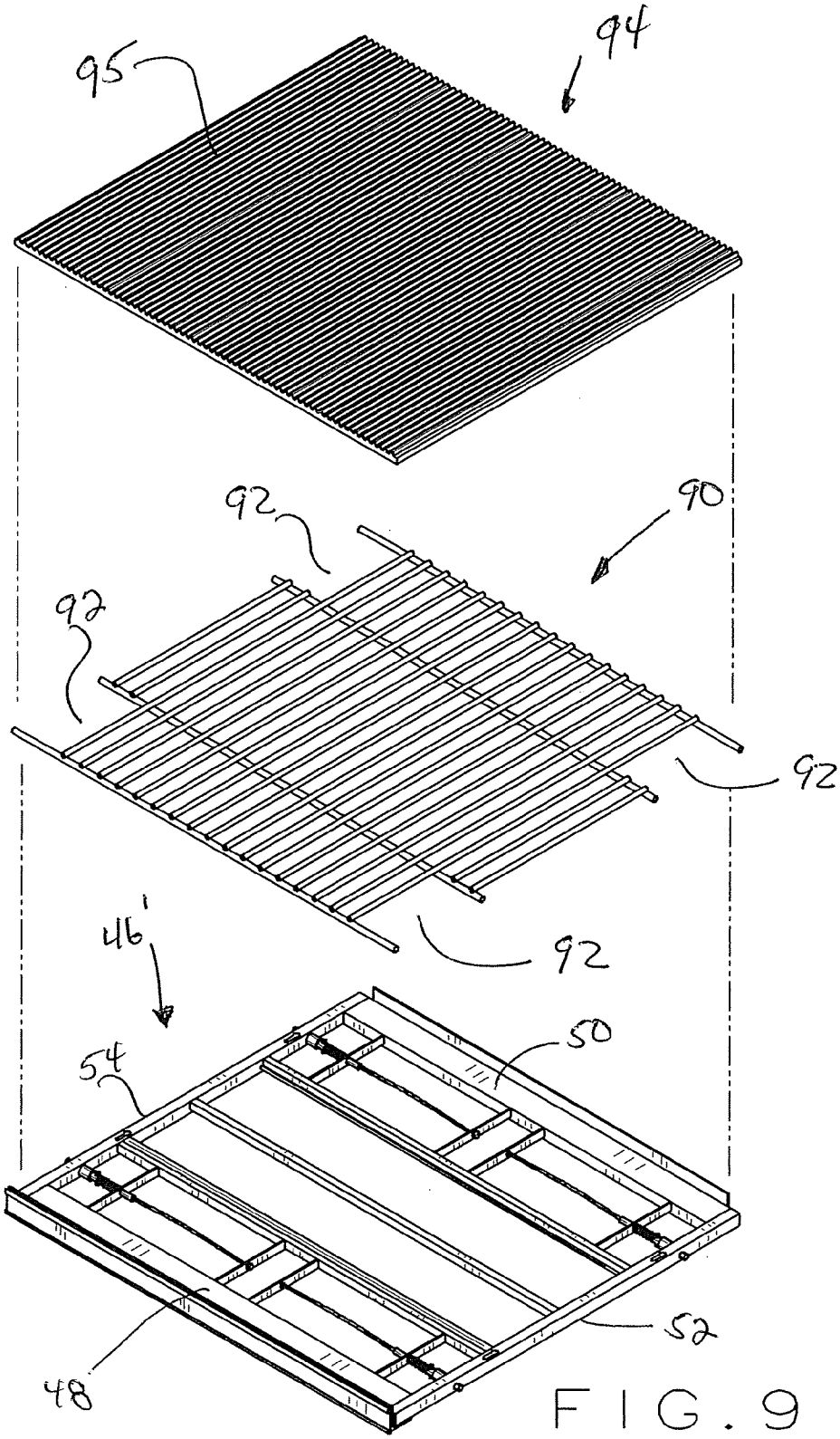

FIG. 9

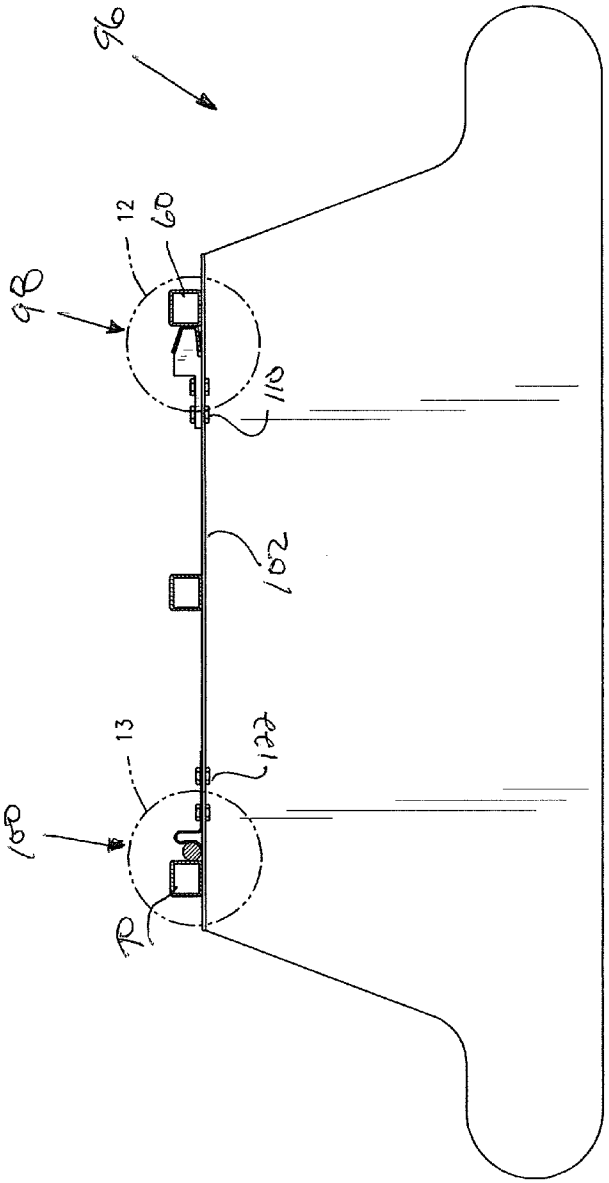

FIG. 10

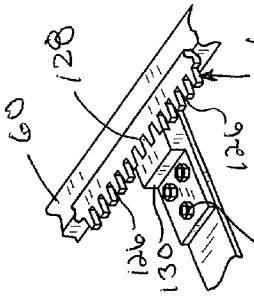

FIG. 14

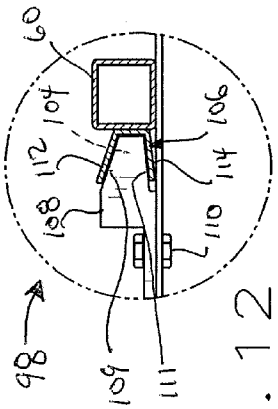

FIG. 12

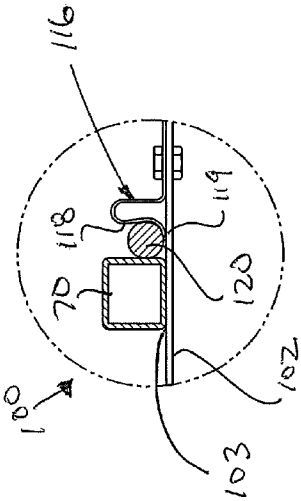

FIG. 13

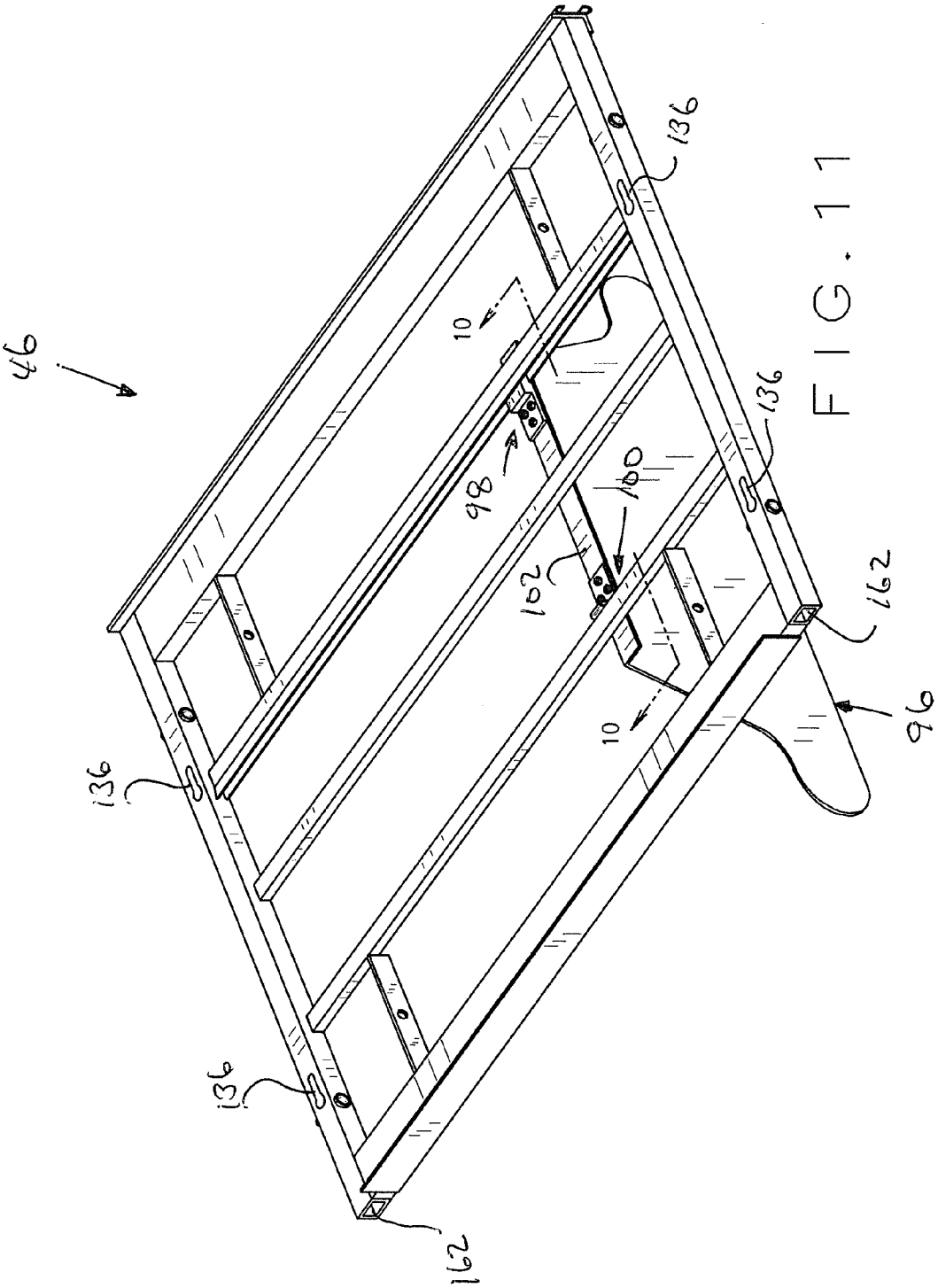

FIG. 11

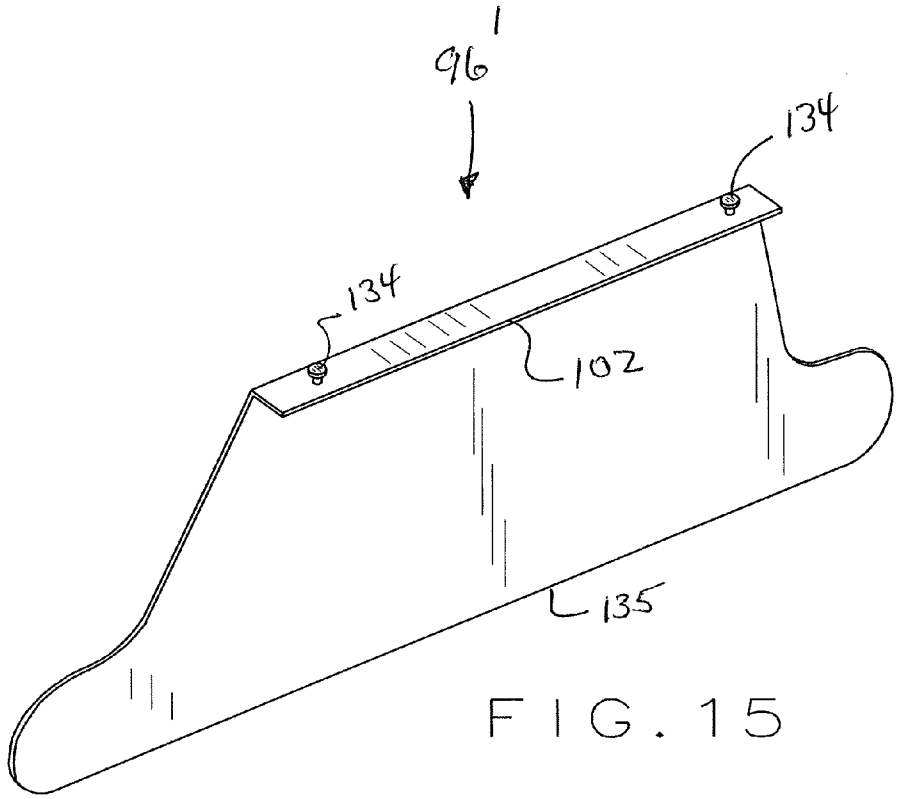

FIG. 15

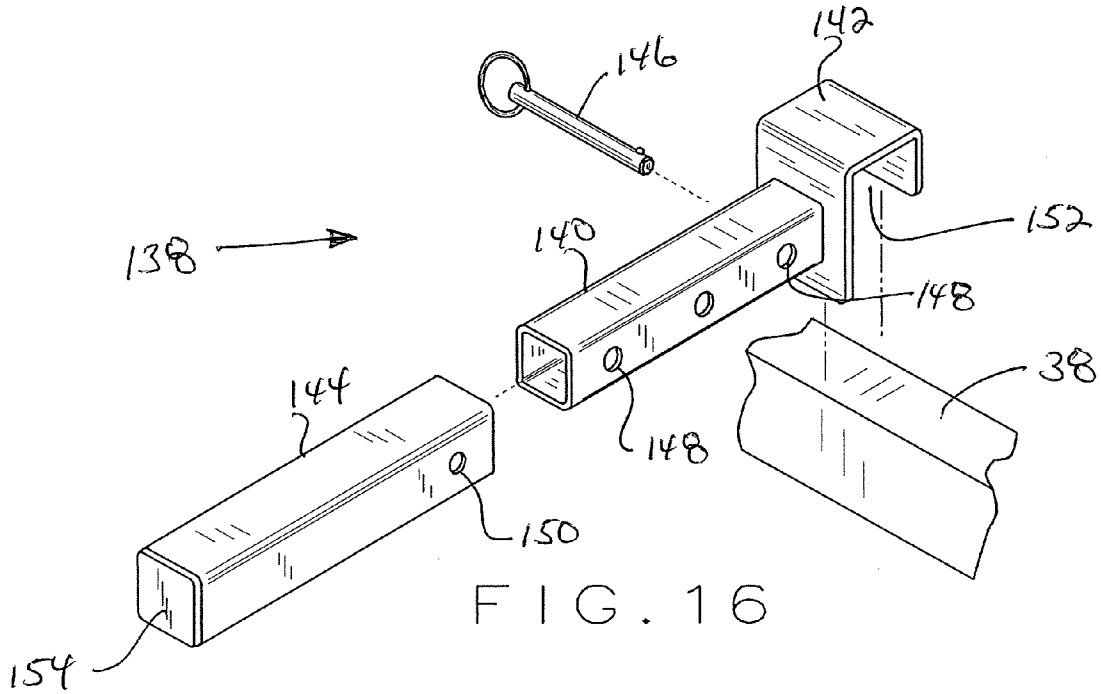

FIG. 16

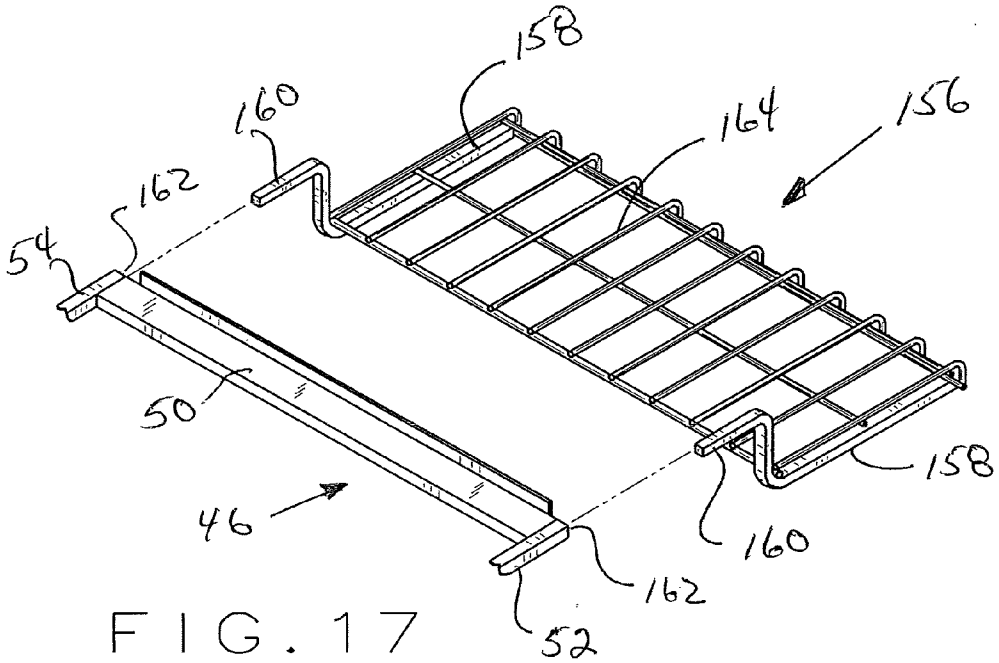

FIG. 17

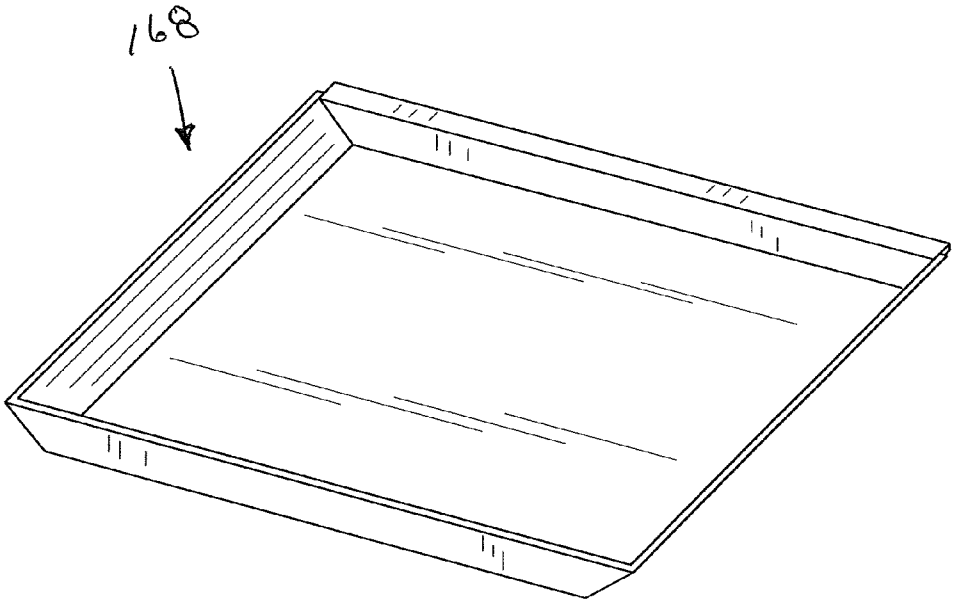

FIG. 18

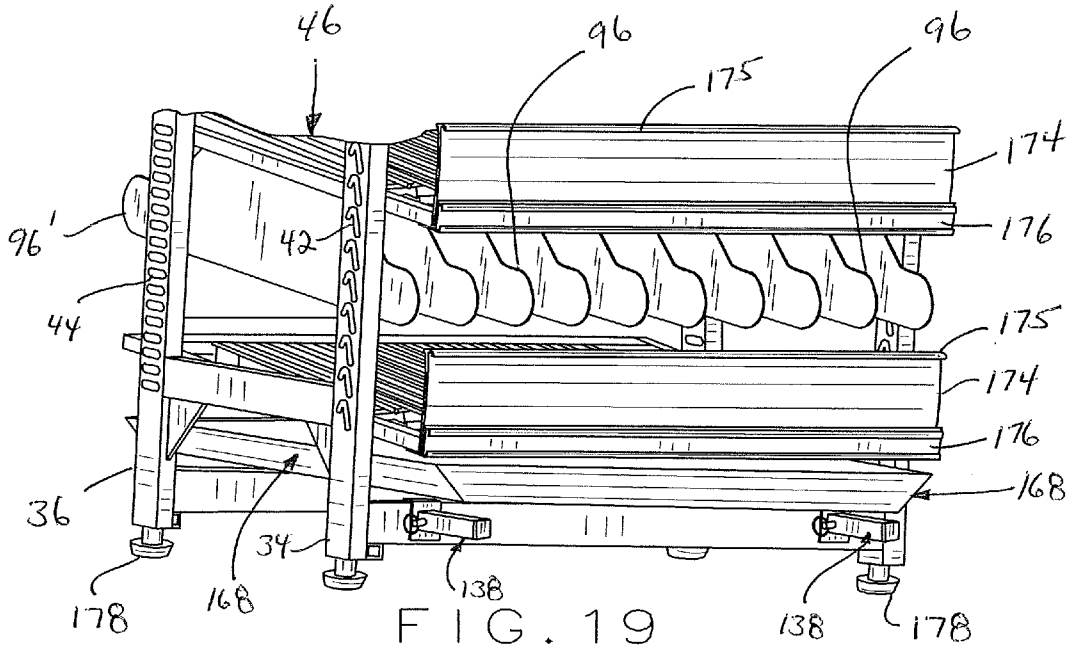
46
96
96
175
174
96'
42
176
44
175
174
176
168
36
34
178
168
138
138
178

FIG. 19

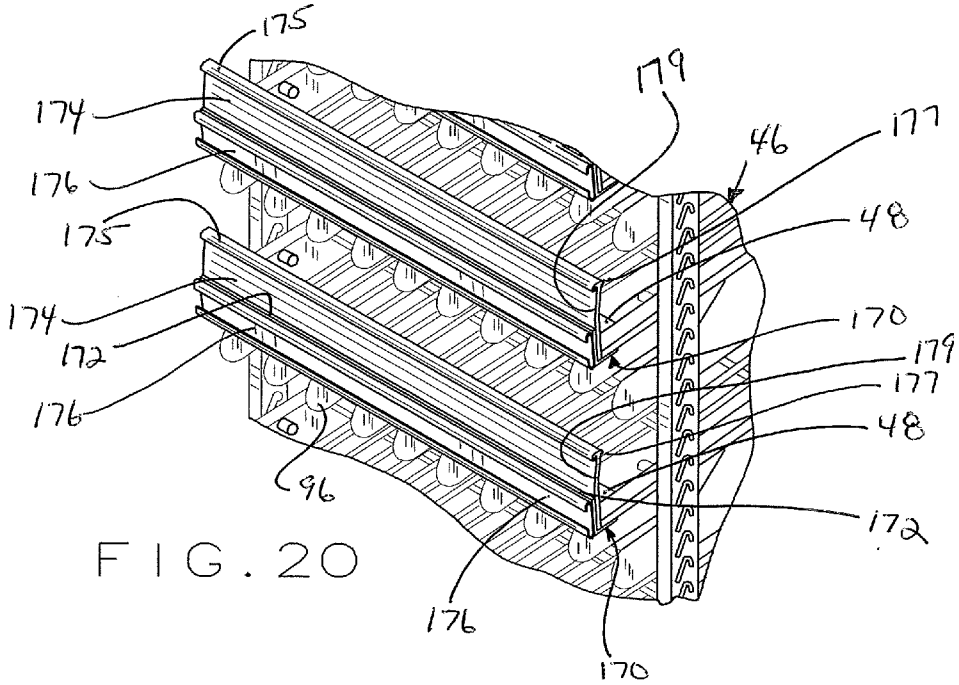
175
179
174
46
177
176
48
175
174
170
172
179
176
177
48
96
172
176
170

FIG. 20

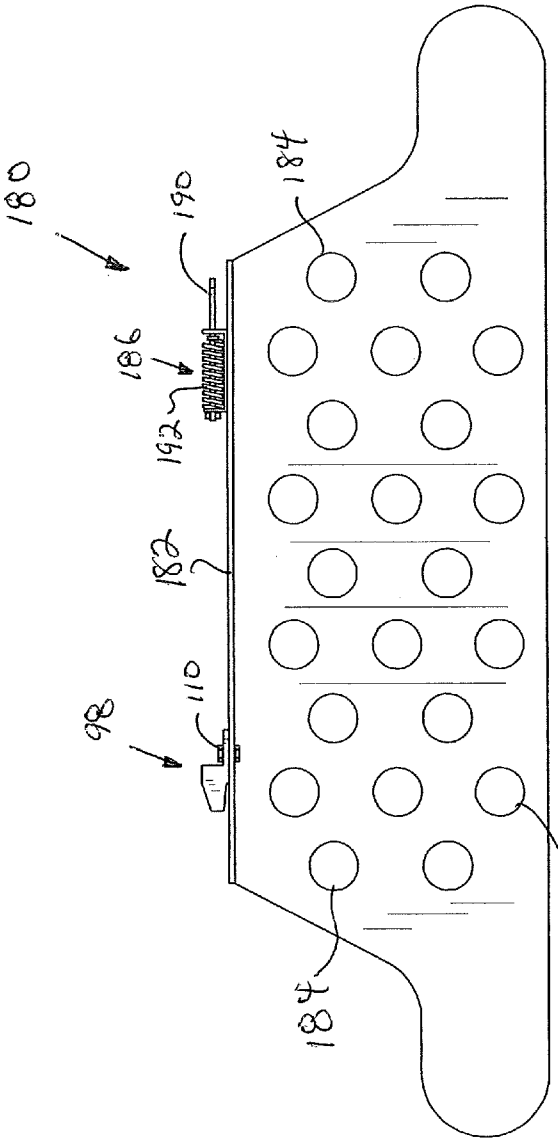

FIG. 21

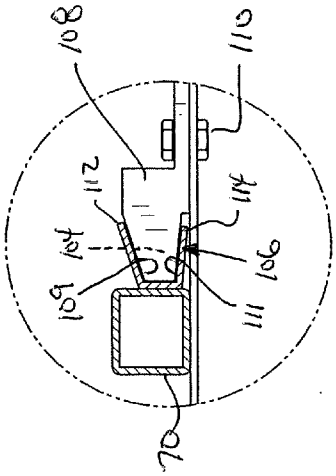

FIG. 23

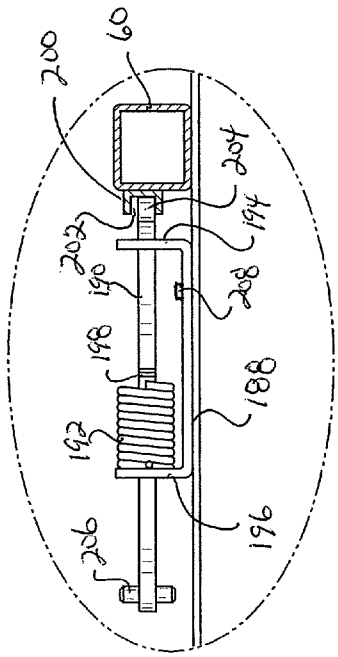

FIG. 22

PRODUCT MERCHANDISING SYSTEM FOR WALK-IN DISPLAY COOLERS AND THE LIKE

CROSS-REFERENCE TO RELATED APPLICATION

[0001] This application is a non-provisional application claiming the benefit of provisional Patent Application Ser. No. 60/984,037 filed Oct. 31, 2007 the entire disclosure of which is incorporated herein by reference.

[0002] The present invention relates generally to product merchandising display racks and, more particularly, to a product merchandising system for use in walk-in type display coolers and the like wherein the divider members associated with each particular shelf member can be selectively positioned and adjusted to accommodate differently sized products, and wherein each individual shelf member is capable of quick and easy vertical and horizontal adjustment relative to its associated frame structure for both flat shelf and gravity feed operations.

BACKGROUND OF INVENTION

[0003] Walk-in product merchandising display coolers are commonly used in retail outlets such as convenient stores and grocery stores to display a wide variety of different types of products to consumers. A walk-in cooler typically includes one or more consumer access doors that open into the store area to allow a consumer access to products from display racks and associated shelving positioned adjacent the access doors. Such walk-in display coolers also typically include a storage area located behind the display racks which permits both the storage of product to be ultimately placed on the display racks and provides room for employees to fill the display racks from the rear with products stored within the storage area of the cooler.

[0004] A wide variety of different types of shelving systems are typically used for holding and displaying the varied products to consumers from within such coolers. Some of these display systems are movable and some are anchored to the walk-in cooler floor. Some of these units provide a plurality of shelves which are vertically adjustable and positionable within a fixed framework which typically includes four upright support members each including some type of mechanism for vertically adjusting the shelving units positioned therebetween. In some cases, a wire rack is positionable within the upright frame structure associated with each cooler door and additional shelving is positioned on top of this wire rack. Also, importantly, the shelf dividers associated with these systems are typically not adjustable to accommodate differently sized products. Although some of the known shelving systems allow for the initial placement of the shelves within its associated framework structure, once this initial positioning is accomplished, such systems do not allow for easy further adjustability of such individual shelves into other orientations including into other gravity feed orientations or into a horizontal orientation. Still further, such additional repositioning of the individual shelf members typically requires all product from such shelves and, often times, adjacent shelves, to be removed so that the individual shelf member can be repositioned within the associated framework structure. This takes considerable time and typically cannot be accomplished by a single person.

[0005] Thus, there is a need for an improved product merchandising system for use in walk-in type coolers and the like wherein the individual shelf members can be easily repositioned both horizontally and vertically within the associated framework structure while the shelf members are loaded to achieve a plurality of different adjustably positionable orientations including a horizontal orientation as well as a plurality of different angular gravity feed orientations; wherein the individual shelf divider members are infinitesimally adjustable to accommodate any width product; wherein the merchandising system is a free-standing unit which can easily replace existing units, either individual or as a single set up across a plurality of cooler doors; and wherein the merchandising system can be a mobile unit which may be used as part of a shuttle system for quick change out of preferred products as a function of the time of day, or simply to replace sold out product.

[0006] Accordingly, the present invention is directed to overcoming one or more of the problems as set forth above.

SUMMARY OF INVENTION

[0007] The present invention relates to a product merchandising system for use in walk-in display coolers and the like, or other product merchandising areas, wherein the present system includes a framework structure adaptable for adjustably positioning a plurality of individual shelf members therebetween, the framework structure being either non-movable or positioned on a plurality of casters or other wheel means for freely moving the entire system into and/or out of the storage area associated with a cooler space, or from a first location to a second location, when desired for loading and for presenting products to consumers through the cooler door openings. If the framework structure is non-movable, the present product merchandising system can be easily retrofitted into existing cooler space by replacing existing individual units positioned in front of separate cooler doors with individual respective present systems, or by replacing the entire existing shelving system with the present systems across all of the cooler doors. If individually used, an old unit can be pulled out of the cooler space and a present unit can be moved into that space. If the entire system is replaced, intermediate units of the present system can share common uprights as will be hereinafter explained. When equipped with casters or other wheel means, a plurality of the present product merchandising systems could be used as part of a shuttle system for quickly changing out products within the cooler space wherein one complete system could be fully loaded and held in abeyance until the unit positioned adjacent a particular cooler door is emptied or partially emptied. Change out is easily accomplished by rolling the emptied or partially emptied unit away from the cooler door opening and thereafter immediately positioning the previously restocked unit adjacent that particular cooler door for immediate access by customers.

[0008] The present framework structure includes a plurality of upright support members each including a plurality of openings or slots strategically positioned for cooperatively engaging retractable pin members associated with each individual shelf member for vertically adjustably positioning each individual shelf member within the associated framework structure. The openings and slots associated with the vertical upright members are spaced closer than currently available in the marketplace thereby enabling the individual shelf members to be vertically spaced closer together depend-

ing upon the size of products positioned thereon and potentially allowing for additional rows of products to be faced towards the cooler door as well as potentially allowing for more individual shelf members to be vertically positioned within the associated framework structure.

[0009] In this regard, each individual shelf member includes a plurality of spring loaded retractable pin members associated with each side portion thereof, the pin members being insertably positionable within any one of the plurality of openings or slots associated with the upright support members forming the framework structure. The pin members have sufficient travel between their retracted and extended positions such that they will always hold that particular shelf member at a particular intermediate location within the framework structure regardless of the spacing or tolerance differences between two opposed upright members. Each pin member is spring loaded and attached to a cable system easily accessible by a single person from the underneath portion of each individual shelf member. When the cable system is activated, each respective pin member associated with that particular cable is pulled inwardly so as to release such pin member from its corresponding opening/slot associated with the upright support members. This allows a user to disengage a particular shelf member from the framework structure for repositioning therein. Although several embodiments of a cable system are disclosed and explained hereinafter, it is recognized and anticipated that any release mechanism can be utilized to retract and extend the associated pin members for disengagement and engagement with the associated upright support members. In one embodiment of the present invention, a pair of cable systems are associated with each individual shelf member, one associated with the front portion of the shelf member and one associated with the rear portion of the shelf member. This allows a user to reposition the front portion of the shelf member separate and apart from repositioning the rear portion of the unit. Other systems and configurations are disclosed herein and still other systems and configurations can likewise be used.

[0010] The present system also includes a plurality of shelf divider members which are each individually horizontally adjustable across the entire width of each shelf member for changing the width of each product channel to accommodate different sized products. Each of the shelf divider members are removably engageable with the underneath portion of the shelf member positioned thereabove and the divider members will extend downwardly from the shelf member located above into the product display space of the shelf member located therebelow. The underneath side portion of each respective shelf member includes a pair of transverse bar engaging members specifically constructed to receive engagement means associated with the top portion of each respective shelf divider member. Each individual shelf divider member is designed such that a user, standing at the rear of the shelf, can easily position and engage the shelf divider member with the respective transverse bar engaging members associated with the shelf member positioned thereabove. Several embodiments of engagement means for removably attaching and removing each respective shelf divider member along the length of the transverse bar engaging members are disclosed hereinafter. Such mechanisms allow each respective shelf divider member to be positioned and located anywhere along the full length of the width of each shelf member. Any plurality of shelf divider members can be positioned and locked into place along the width of any particular shelf member so as to provide differently spaced product channels with respect to the shelf member positioned therebelow. Also, since the shelf divider members are removably attached to the underneath side portion of the shelf member positioned thereabove, the design and shape of the shelf divider members provides increased stability for taller products while, at the same time, enabling the actual floor surface of each respective shelf member to be a single continuous floor uninterrupted or uninhibited with any type of divider walls or other protrusions or projections which would interfere with product positioning, location, and slidability during gravity feed operations.

[0011] The present system may likewise include a drip pan or catch pan at the bottom of the framework structure underneath the lowermost shelf to catch spillage and any glass breakage. This will allow for easy clean up of the overall unit and eliminate spillage onto the floor of the cooler itself.

[0012] The present system may likewise include a work tray which can be easily attached to the rear of a particular shelf member for allowing a stock person the ability to place product in easy reach for reloading the individual shelf members.

[0013] Other features include an adjustable front spacer member attachable to the framework structure for adjusting the spacing between the framework structure and the cooler door openings; a front product stop or wall member removably attachable to the front of each shelf member so that front walls of different heights can be interchangeable at the store depending upon the type of products being merchandised from each particular shelf member; and a price channel incorporated into or attachable to the front of the product stop member.

[0014] It is also anticipated that the overall framework structure associated with the present system can likewise be free standing without any casters or other mobility. In this particular application, the present framework structure can be fixedly attached or otherwise secured or positioned with respect to the cooler floor or other product merchandising area.

[0015] These and other features and advantages of the present invention will be apparent to those skilled in the art after considering the following detailed specification in conjunction with the accompanying drawings.

BRIEF DESCRIPTION OF DRAWINGS

[0016] For a better understanding of the present invention, reference may be made to the accompanying drawings in which:

[0017] FIG. **1** is a perspective view of a typical walk-in display cooler capable of utilizing the present product merchandising system.

[0018] FIG. **2** is a perspective view of one embodiment of the present product merchandising system constructed and assembled in accordance with the teachings of the present invention.

[0019] FIG. **3** is a perspective view of the framework structure associated with the product merchandising system of FIG. **2**.

[0020] FIG. **4** is an enlarged fragmentary perspective view of the openings associated with the front upright support members of the framework structure of FIG. **3**.

[0021] FIG. **5** is an enlarged fragmentary perspective view of the slots associated with the rear upright support members of the framework structure of FIG. **3**.

[0022] FIG. **6** is a perspective view of one embodiment of a shelf member constructed in accordance with the teachings of the present invention for use with the product merchandising system of FIG. **2**.

[0023] FIG. **7** is a perspective view of another embodiment of a shelf member similar to the shelf member of FIG. **6** except utilizing a different cable arrangement.

[0024] FIG. **8** is a perspective view of still another embodiment of a shelf member utilizing still another cable arrangement.

[0025] FIG. **9** is an exploded perspective view of one embodiment of the present shelf members showing a wire grid member and a gravity feed floor member constructed in accordance with the teachings of the present invention for use with the present shelf members.

[0026] FIG. **10** is a side elevational view of one embodiment of a shelf divider member constructed in accordance with the teachings of the present invention.

[0027] FIG. **11** is a perspective view showing the divider member of FIG. **10** attached to a present shelf member.

[0028] FIG. **12** is a fragmentary side elevational view showing the front engagement means of the divider member of FIG. **10** engaged with corresponding means associated with the present shelf members.

[0029] FIG. **13** is a fragmentary side elevational view showing the rear engagement means of the divider member of FIG. **10** engaged with corresponding means associated with the present shelf members.

[0030] FIG. **14** is a fragmentary perspective view of another embodiment of the front engagement means associated with the present divider member and shelf member.

[0031] FIG. **15** is a perspective view of one embodiment of an end divider member constructed in accordance with teachings of the present invention.

[0032] FIG. **16** is an exploded perspective view of a front spacer member constructed in accordance with the teachings of the present invention.

[0033] FIG. **17** is an exploded perspective view of a work tray constructed in accordance with the teachings of the present invention, the work tray being cooperatively engageable with the rear portion of one of the present shelf members.

[0034] FIG. **18** is a perspective view of a drip pan which can be used with the product merchandising system of FIG. **2**.

[0035] FIG. **19** is a partial perspective view of the lower portion of the product merchandising system of FIG. **2** showing installation of the present drip pan.

[0036] FIG. **20** is a partial perspective view of the top portion of the product merchandising system of FIG. **2** showing the front wall stop member associated with each respective shelf member.

[0037] FIG. **21** is a side elevational view of another embodiment of a shelf divider member constructed in accordance with the teachings of the present invention.

[0038] FIG. **22** is a fragmentary side elevational view showing the front engagement means of the divider member of FIG. **21** engaged with corresponding means associated with the present shelf members.

[0039] FIG. **23** is a fragmentary side elevational view showing the rear engagement means of the divider member of FIG. **21** engaged with corresponding means associated with the present shelf members.

DETAILED DESCRIPTION

[0040] Although the present product merchandising system will be described with respect to use in a typical walk-in display cooler environment, its use is not so limited and it is recognized and anticipated that the present unit and system will be utilized in a wide variety of different applications as will be hereinafter evident. Referring to the drawings more particularly by reference numbers wherein like numerals refer to like parts, the number **30** in FIGS. **1** and **2** identifies one embodiment of a product merchandising system constructed according to the teachings of the present invention. A typical walk-in cooler **10**, as illustrated in FIG. **1**, includes side walls **12**, **14**, **16** and **18**, a floor **20**, and a roof **22**. The cooler **10** further includes a plurality of the present product merchandising systems **30** positioned at the front of the cooler adjacent to one or more customer access doors **24** associated with the front cooler wall **14**. The cooler **10** is also provided with an access door **26** for ingress and egress of a worker into and out of the interior space **28** for both storing products within the cooler and for stocking and re-stocking the present display systems **30**. The above-described cooler **10** is of a type well-known in the art and can be found in a wide variety of retail outlets such as supermarkets, convenient stores, gas stations, grocery stores, and the like. Other embodiments and variations of cooler **10** are also well known and available in the marketplace.

[0041] As illustrated in FIG. **1**, each of the present product merchandising systems **30** is positioned adjacent a corresponding cooler access door **24** and each product merchandising system **30** includes a framework structure **32** having four upright support members **34** and **36** connected together at their respective top and bottom portions via opposed pairs of horizontally extending cross-brace members **38** and **40** as best illustrated in FIGS. **2** and **3**. Opposed cross-brace members **38** are associated with the front and rear portions of framework structure **32** and opposed cross-brace members **40** are associated with the side portions of framework structure **32**. The framework structure **32** can be integrally formed as a one-piece unit, or cross-brace members **38** and **40** may include connecting means associated with each opposite end portion thereof for cooperatively engaging corresponding means associated with the respective upright support members **34** and **36**. These cooperatively engageable means may include any well known means for accomplishing this task including one or more projections associated with the respective opposite end portions of the cross-brace members **38** and **40** which cooperatively engage corresponding openings or slots associated with the respective upright support members **34** and **36**; a projection/keyhole slot arrangement; or other suitable engaging means. In this regard, if the upright support members and corresponding cross-brace members are to be removably engageable with each other, such mechanism must provide for a strong, stable joinder between the various members while at the same time being easily assembled by a single person. In the particular embodiment illustrated in FIGS. **2** and **3**, upright support members **34** represent the front support members while upright support members **36** represent the rear support members. Each upright support member **34** and **36** may likewise include a caster or other wheel means **39** for allowing the entire system **30** to be freely selectively movable from a first location to a second location.

[0042] When the framework structure **32** is positioned adjacent a respective cooler access door **24**, the front upright support members such as the support members **34** include a plurality of openings **42** positioned in spaced apart relationship along a substantial portion of two opposed side walls forming the front upright support members **34** as illustrated in

FIGS. **3** and **4**. The openings **42** are in the shape of a candy cane as best illustrated in FIG. **4** and the vertical incremental spacing between each respective opening **42** is much closer than currently available thereby enabling the individual shelf members **46** to be vertically spaced closer together depending upon the size of the products to be positioned on each respective shelf member and potentially allowing for additional rows of products to be faced towards the cooler door **24** for merchandising such products to consumers. Each individual shelf member **46** will include a pair of retractable pin members **57** associated with each front side portion thereof as best illustrated in FIGS. **6-8**, the respective pin members **57** being insertably positioned within any one of the plurality of openings **42** associated with the front upright support members **34** for holding the front portion of that particular shelf member at a particular intermediate location within the framework structure **32** as will be hereinafter further explained. Since the openings **42** extend through or are located on both opposed side walls of the front support members **34**, the upright members **34** are interchangeable and can be used on either side of the framework structure **32**.

[0043] In similar fashion, the rear upright support members **36** each include a plurality of slots **44** positioned in spaced apart relationship along a substantial portion of two opposed side portions of the rear support members **36** as best illustrated in FIGS. **3** and **5**. Here again, the incremental vertical spacing between the respective slots **44** is much closer together than currently available thereby likewise enabling the individual shelf members **46** to be vertically spaced closer together depending upon the size of the products positioned thereon. Each individual shelf member likewise includes a pair of retractable pin members **59** associated with each rear side portion thereof as best illustrated in FIGS. **6-8**, the rear pin members **59** being insertably positioned within any one of the plurality of slots **44** associated with the rear upright support members **36** for holding the rear portion of that particular shelf member at a particular intermediate location within the framework structure **32**.

[0044] FIG. **6** illustrates one embodiment of the plurality of individual shelf members **46** utilized within the framework structure **32**. Each shelf member **46** is substantially rectangular in shape and includes front and rear transverse frame members **48** and **50** and opposed side frame members **52** and **54**. A pair of retractable pin member assemblies **56** are mounted adjacent the front portion of the shelf member **46** and a pair of retractable pin member assemblies **58** are mounted adjacent the rear portion of the shelf member **46** as best illustrated in FIG. **6**. The pin member assemblies **56** are mounted to the front portion of the shelf member **46** between front frame member **48** and a transverse member **60** and each assembly includes a spring plunger having a pin member **57** associated with one end portion that is biased outwardly towards its extended position by a spring member **68**. The assemblies **56** extend through and are supported by a guide/bracing member **62** which is positioned and located between members **48** and **60** as best illustrated in FIG. **6**. Each guide/bracing member **62** includes an opening allowing one end portion of the retractable pin assembly **56** to extend therethrough for attachment to a conventional cable member **64**, the cable member **64** having its opposite end portions attachable to the opposite end portion of each of the front retractable pin member assemblies **56** as illustrated in FIG. **6**. Cable member **64** likewise extends through a pair of additional guide/bracing members **66** as illustrated to provide additional support to the cable member **64**. The terminal end portion of each retractable spring plunger, namely, the pin member **57**, extends through an opening in the respective opposed side frame members **52** and **54** as illustrated. The spring member **68** biases the pin member **57** to its extended position as illustrated.

[0045] When the cable member **64** is pulled in a direction towards the front or rear of the shelf member **46**, the respective pin members **57** are retracted against the compression of spring member **68** to a position within the side perimeter of the shelf member **46**. When the cable member **64** is released, each spring member **68** biases its respective pin member **57** outwardly through the opening associated with each respective side frame member **52** and **54** such that the pin members **57** extend beyond the side perimeter of the shelf member **46** for engagement with the openings **42** associated with the front upright support members **34** as will be hereinafter explained. The shelf member **46** is designed so that it can be easily grasped by a user and securely held in hand before cable member **64** is activated and before the pin members **57** are released.

[0046] The retractable pin member assemblies **58** associated with the rear portion of shelf member **46** are substantially identical in construction to the pin member assemblies **56** and are positioned and located between rear frame member **50** and transverse member **70** as again illustrated in FIG. **6**. Each assembly **58** includes a spring plunger having a pin member **59** associated therewith extending through an opening in the respective opposed side frame members **52** and **54** as illustrated, the pin member **59** being biased towards its extended position by spring member **68'** in the same fashion as previously explained with respect to retractable pin assemblies **56**. Like assemblies **56**, the assemblies **58** extend through and are supported by guide/bracing members **72**. The bracing members **72** are positioned and located between the members **50** and **70** as previously explained with respect to bracing members **62**. An additional cable member **74** is attached to the opposite end portions of each of the rear pin member assemblies **58** as illustrated in FIG. **6** and extend through openings associated with additional guide/bracing members **76** for the same reasons as explained above. When cable member **74** is pulled in a forward or rearward direction, the pin members **59** are retracted against the compression of spring members **68'** within the side perimeter of shelf member **46** similar to pin members **57**. When the cable member **74** is released, pin members **59** are again biased outwardly through spring members **68'** so as to extend beyond the respective side frame members **52** and **54** for attachment to the slots **44** associated with the rear upright support members **36**. Here again, the shelf member **46** can be easily and securely grasped by a user before cable member **74** is activated and before pin members **59** are released.

[0047] Each individual shelf member **46** can be easily manipulated and maneuvered for engagement with the framework structure **32**. Shelf member **46** is positioned at the appropriate location within the framework structure **32** and a user merely pulls the respective cable members **64** and **74**, either in a forward or a rearward direction, so as to retract the respective pin members **57** and **59** within the perimeter of the side frame members **52** and **54**. With the pin members **57** and **59** retracted, the shelf member is positioned adjacent the upright support members **34** and **36** and the respective cable members **64** and **74** are released. When the front cable member **64** is released, pin members **57** are urged outwardly and

extend beyond the perimeter of side frame members **52** and **54** so as to engage one of the plurality of openings **42** associated with the front upright support members **34**. In similar fashion, when the rear cable member **74** is released, pin members **59** are urged outwardly and extend beyond the perimeter of side frame members **52** and **54** so as to engage one of the plurality of slots **44** associated with the rear upright support members **36**. In this regard, the rear pin members **59** can be selectively positioned in any one of a plurality of slots **44** so as to provide a substantially flat horizontal presentation of the shelf member **46** to consumers through the cooler door **24**, or so as to achieve any particular angular orientation for a gravity feed operation. Angular orientations in the range of about ±12° are easily achieved by the present arrangement of the openings **42** and slots **44**, and other orientations are likewise possible.

[0048] It is important to note that the respective pin members **57** and **59** have sufficient travel distance between their respective retracted positions and extended positions such that pin members **57** and **59** will always engage the respective openings **42** and slots **44** regardless of any spacing or tolerance differences between the respective pairs of opposed upright support members **34** and **36** associated with different product merchandising units **30** when a particular shelf members **46** is manipulated and maneuvered for engagement with the framework structure **32**. Due to manufacturing tolerances and differences in the width or spacing between the opposed front and rear upright support members **34** and **36**, the travel of the respective pin members **57** and **59** is such that regardless of such spacing differences between respective product merchandising units **30**, each respective shelf member **46** will fully engage the respective openings and slots **42** and **44**. In this regard, each pin member **57** and **59** may be slightly tapered and may include a shoulder portion (not shown) such that the shoulder portion will always rest against or abut the surface of the respective upright support member adjacent the respective opening **42** or slot **44** into which such pin member will extend. This travel of the pin members therefore ensures that the pin members are always engaged with the respective openings and slots **42** and **44** regardless of any spacing differences due to manufacturing tolerances.

[0049] Still further, it is important to note that the candy cane shaped openings **42** provide for two different locations **78** and **80** for securing the front pin members **57** within a respective opening **42**. Because of the shape of the openings **42**, the pin members **57** can be positioned and secured within the slot cavity **78** formed at one end portion of the opening **42**, or it can be positioned in slot cavity **80** formed at the opposite end portion of the opening **42**. Slot cavity **78** is positioned and located towards the front portion of the front upright support members **34** and therefore allows the overall shelf member **46** to be located closer to the cooler door **24** or other structure. In contrast, slot cavity **80** is located towards the rear portion of the front upright support members **34** and allows the front wall portion of the shelf member **46** to be positioned farther away from the cooler door **24** or other structure as compared to slot cavity **78**. This enables a user to selectively adjust the spacing of the front portion of each shelf member **46** relative to the cooler door **24** or other structure based upon the types of products being merchandised from each individual shelf. This allows a user to better control the shelf set back distance from the cooler door or other structure within the same opening **42**. Because of the candy cane shape of the openings **42**, the pin members **57** will be securely held in either slot cavity **78** or slot cavity **80** once positioned therein. This small adjustment with respect to each individual opening **42** provides great flexibility and adjustability to a user when orienting products within the units **30**. Also, the shape of the openings **42** also increases the likelihood that the pin members **57** will always find, hit or extend into the respective openings **42** during installation or re-positioning of the shelf members **46**.

[0050] It is recognized that initial installation of any particular shelf member **46** onto a substantially empty framework structure **32** may require the use of two individuals, one at the front of the unit and one at the back of the unit, to initially position such shelf member. Once the shelf members **46** are initially positioned within the framework structure **32**, additional adjustments and reconfiguration of any particular shelf member **46** can be easily and quickly accomplished by a single individual. For example, an individual standing at the rear of the overall system **30** can pull the rear cable member **74** so as to retract pin members **59** thereby freeing the rear portion of any particular shelf member **46** for movement up or down for engagement with another pair of slots **44** associated with the rear upright support members **36**. In similar fashion, the front of any particular shelf member **46** can likewise be easily and quickly adjusted by a single person standing at the front of the system **30** by pulling the cable member **64** to retract pin members **57** and thereafter reengaging such pin members with another pair of openings **42** including moving the pin members **57** to the unused slot cavity **78** or **80** associated with the same opening **42**. This readjustment can be easily accomplished with a fully loaded shelf member **46**.

[0051] Still further, it is also recognized and anticipated that other cable configurations can likewise be utilized with each respective shelf member **46** to retract and extend the pin members **57** and **59**. For example, as best shown in FIG. **7**, each individual pin member assembly **56** and **58** may include its own separate cable member, such as cable members **82**, **84**, **86** and **88**, each of which must be individually activated in order to retract its associated pin member **57** and **59**. In this regard, the structure of shelf member **46'** is substantially identical to the structure of shelf member **46** illustrated in FIG. **6** as previously described, including the structure and operation of the pin member assemblies **56** and **58**, except that one end portion of each of the respective cable members **82**, **84**, **86** and **88** is fixedly attached to one of the respective guide/bracing members **66** and **76** as illustrated in FIG. **7**. As with cable members **64** and **74**, each respective cable member **82**, **84**, **86** and **88** can be pulled in a forward or rearward direction against the spring loaded pin members **57** and **59** to retract such pin members within the perimeter of side frame members **52** and **54** as previously explained. Obviously, release of any one of the individual cable members **82**, **84**, **86** and **88** will extend that particular pin member beyond the perimeter of the respective side frame member **52** and **54** for engagement with a respective opening or slot **42** and **44** as previously explained. Again, proper holding and handling of the shelf member **46'** is required before any of the cable members **82**, **84**, **86** and **88** are activated and before the respective pin members **57** and **59** are released.

[0052] Still further, it is also recognized and anticipated that the cable members associated with each respective pin member assembly **56** and **58** can be tied together through a cable system having a single activation mechanism such that when the activation mechanism is pulled or otherwise engaged, all of the individual pin members **57** and **59** will be retracted for positioning or repositioning of a shelf member

46 within the framework structure **32**. One embodiment of this mechanism is illustrated in FIG. **8** wherein shelf member **46"** is substantially identical in structure to shelf member **46** illustrated in FIG. **6** except that cable members **64** and **74** are tied together through cable member **75** in a conventional manner such that pulling cable member **75** will, in turn, pull cable members **64** and **74** as previously explained to release pin members **57** and **59**. Cable member **75** may have a pull handle **89** or other activation member such that when the pull handle **89** is pulled or otherwise activated, all of the pin members **57** and **59** will be simultaneously retracted and released from their corresponding openings and slots **42** and **44**. In similar fashion, when the pull handle **89** or other activation mechanism is released, all of the pin members will be extended as previously explained and reengaged with one of the openings or slots **42** and **44** associated with the front and rear upright support members **34** and **36**. In this particular embodiment, it is preferred that handle member **89** be associated with the rear of the shelf member **46"** so as to accomplish all maneuvering of the shelf member from the back side of unit **30**. Again, proper holding and handling of the shelf member **46"** is required as previously explained before the pin members are released.

[0053] A wire grid structure such as wire grid member **90** illustrated in FIG. **9** is shaped and dimensioned so as to fit within the recessed area formed by and between the shelf member front, rear and side members **48**, **50**, **52** and **54**. The wire grid member **90** is inserted onto the top portion of the shelf member **46'** and provides a floor surface for the shelf member. Depending upon the type of products to be merchandised from a particular shelf member **46'**, the wire grid member **90** may provide a sufficient floor surface for holding and merchandising certain types of products. It should be noted that the wire grid member **90** may include cut out portions **92** located at the respective corners thereof, the cut outs **92** overlaying the spring loaded pin member assemblies **56** and **58** so as not to interfere with the operation of such assemblies. Depending upon how the pin member assemblies **56** and **58** are mounted within a particular shelf member, the cut out portions **92** may not be necessary. If necessary, the wire grid member **90** can be further secured to the shelf member **46'** by suitable conventional means.

[0054] In addition, and particularly for gravity feed operations, a gravity feed floor member **94** can be positioned on top of the wire grid member **90** and secured thereto in a conventional manner as illustrated in FIG. **9**. The floor member **94** includes a substantially flat base portion having a plurality of ribs or runners **95** extending upwardly therefrom for supporting a wide variety of different types of products. The runners **95** may be triangular in shape and are sufficiently spaced so as to adequately support products positioned thereon while at the same time reducing friction between the floor member **94** and the products positioned thereon. The floor member **94** may be of unitary construction and formed from a relatively rigid plastic material which is also preferably mixed or impregnated with a silicone resin or other lubricant to improve the slidability of products positioned thereon. It is also recognized and anticipated that the floor member **94** may be made from other materials including metallic and non-metallic sheet members. When positioned on top of grid member **90**, the floor member **94** provides a smooth continuous surface for both holding and supporting products positioned thereon, and for allowing such products to slide forward in a gravity feed operation. This is particularly important when the present shelf members **46**, **46'** and/or **46"** are positioned in a gravity feed orientation since products positioned thereon must be able to slide under the force of gravity towards the front portion of the shelf member when the forwardmost products are removed therefrom. It is also important that the spacing between the runners **95** associated with the floor member **94** be such as to accommodate and support any and all of the various products that are to be positioned thereon regardless of the shape or contour of their bottom walls. Since many articles of merchandise are packaged in containers having unique and unusual shapes, it is usually preferred to have the spacing between the runners substantially uniform and relatively small across the width of the floor member **94** so as to accommodate and support products having many different bottom wall configurations. The specific spacing selected may be especially important for some products that have contoured bottom wall portions to properly support such products on the runners to reduce the possibility that they will overturn. In this regard, each individual floor member **94** may include any plurality of runners **95** depending upon the spacing between each pair of runners so selected. It is also recognized that the floor member **94** may be substantially flat and may not include any type of runners or ribs depending upon the particular application.

[0055] The present product merchandising system **30** includes a plurality of shelf dividers **96** as best illustrated in FIGS. **10** and **11** for horizontally adjusting the width of each product channel to accommodate different size products which will be positioned on the respective shelf members **46**. As will be hereinafter explained, these horizontal adjustment increments will be substantially infinitesimal thereby allowing a user to easily vary and change the individual product channels associated with any particular shelf member **46**. In this regard, except for the outer most shelf dividers **96'** as will be hereinafter further explained, each of the shelf dividers **96** are selectively removably engageable with the underneath portion of each respective shelf member **46** positioned thereabove along its entire width and the shelf dividers **96** will extend downward from the shelf member located thereabove into the product display space of the shelf member **46** located therebelow as illustrated in FIGS. **1** and **11**. This enables the actual floor surface of each shelf member **46** to be a single continuous floor member uninterrupted or uninhibited with any type of divider walls or other protrusions or projections which would interfere with product positioning and location such as the gravity feed floor member **94**. Also, importantly, since the shelf divider members **96** extend downwardly from the shelf member located thereabove, they provide better stability for taller products which have a tendency to tumble or tip over as they progress forward during a gravity feed operation. As best illustrated in FIGS. **10** and **11**, the divider members **96** are sized and shaped so as to provide lateral support to the upper portion of products as such products slide to the front portion of each respective shelf member **46**. This is especially true when such products are soft drink type containers which come in various shapes and sizes.

[0056] As best illustrated in FIGS. **11** and **13**, the underneath side portion of each respective shelf member **46** includes a pair of transversely extending shelf frame bar engaging members **60** and **70** specifically constructed to receive the engagement means **98** and **100** associated with the top portion **102** of each respective shelf divider member **96**. Each individual divider member **96** is designed such that a user, standing at the rear of the system **30** and shelf members

46, can easily position and engage a shelf divider member **96** with the respective front and rear bar engaging members **60** and **70** as will be hereinafter explained.

[0057] FIGS. **11** and **12** illustrate one mechanism for removably attaching and sliding each respective shelf divider member **96** along the transversely positioned bar engaging members **60** and **70** so as to position and locate each respective shelf divider member **96** anywhere along the full length of the width of each shelf member **46**. As best illustrated in FIG. **12**, the front bar engaging member **60** associated with the underside portion of each respective shelf member **46** includes a cavity **104** formed by a flange member **106** which is formed with or otherwise attached to the bar member **60**. The cavity **104** of flange member **106** is adapted to receive a wedge member **108** which is positioned and located on the top portion **102** of the divider member **96**. Wedge member **108**, in this embodiment, constitutes engagement means **98** and such wedge member can be attached to the top flange member **102** of divider member **96** by any suitable means such as through the use of rivets or other fastening means **110**. Also, it is recognized that the flange member **106** and transverse bar member **60** may be integrally formed as a one-piece unit, or flange member **106** could be fixedly attached to bar member **60** via any suitable joinder means such as by welding.

[0058] As clearly shown in FIG. **12**, the upper and lower flange leg portions **112** and **114** are angularly oriented so as to correspond to the respective tapers associated with the top and bottom portions **109** and **111** of the wedge member **108**. This angular orientation helps to guide the wedge member **108** into the cavity **104** formed by the flange member **106**. Since the flange member **106** extends the full width of the transverse bar member **60**, the front engagement means **98** (wedge member **108**) can be easily and quickly positioned within the flange member **106** at any location along the full length of transverse bar member **60**. This allows a user to position any plurality of divider members **96** at any location along the length of bar member **60**. The tapers associated with flange leg portions **112** and **114** and the top and bottom portions **109** and **111** of wedge member **108** are such that the wedge member **108** is frictionally held within the flange member **106**. This friction fit between wedge member **108** and flange member **106** prevents lateral movement of the divider members **96** along the length of flange member **106** at the front portion of the shelf member thereby preventing "walking" of the front portion of the divider members **96** over time. This solves an age old problem and provides a proper merchandising solution.

[0059] As clearly shown in FIG. **13**, the rear divider member attachment means **100** is likewise associated with the top flange member **102** of divider member **96** and, in this embodiment, rear attachment means **100** includes a pre-loaded resilient spring-like member **116** which includes an angularly oriented rear portion **118** having a concaved terminal end portion **119** which is shaped and dimensioned so as to engage a wire or rod member **120** associated with the rear shelf bar engaging member **70**. The wire member **120** can be welded or otherwise attached to the rear bar engaging member **70** as illustrated, or such member can be integrally formed therewith. Once the wedge member **108** associated with the front portion of the shelf divider member **96** is positioned within the cavity **104** associated with the flange member **106**, a user simply rotates the rear portion of that particular shelf divider member **96** in an upward manner so as to allow the angular rear portion **118** of the spring-like member **116** to slide along the wire member **120** until its terminal end portion **119** engages the wire member as illustrated in FIG. **13**. This engagement holds the shelf divider member **96** securely in place.

[0060] The shelf divider member **96** should have at least two engagement points to keep each divider member **96** in parallel relationship to each other and so as to keep such members from "walking over time." Once the front wedge member **108** is positioned within the flange member **106**, the divider member **96** can be moved and further adjusted along the length of the front bar engaging member **60** until it is positioned at the proper location wherein, at that time, the rear engagement means **100** is raised into engagement with the rear bar engaging member **70** as previously explained. This locks and holds that particular shelf divider member **96** in position along the width of any particular shelf member **46**. As best illustrated in FIG. **2**, any plurality of shelf divider members **96** can be positioned and locked into place so as to provide differently spaced product channels with respect to the shelf member **46** positioned therebelow. Like wedge member **108**, the resilient spring-like member **116** can be attached to the top flange member **102** of divider member **96** by any suitable means such as through the use of rivets or other fastening means **122**. It is also recognized and anticipated that an optional gasket member (not shown) can be positioned at location **103** (FIG. **13**) between the top divider flange member **102** and rear shelf bar engaging member **70** to increase the friction therebetween to prevent "walking" of the rear portion of the divider members **96** over time.

[0061] FIG. **14** illustrates another engagement mechanism for engaging the front portion of a shelf divider member **96** with the front bar engaging member **60**. In this particular embodiment, the front bar engaging member **60** includes a flange member **124** having a plurality of spaced openings **126** positioned therealong adapted to receive one or more teeth **128** associated with a wedge member or coupling member **130**. Wedge member or coupling member **130**, like wedge member **108**, is fixedly attached to the top flange member **102** of divider member **96** by any suitable means such as through the use of rivets or other fastening means **132**. In this particular embodiment, engagement of the teeth **128** with any of the plurality of openings **126** serves to lock the front portion of the shelf divider member **96** into its proper position. Unlike engagement means **98** illustrated in FIGS. **10** and **12**, use of cooperatively engaging members **124** and **130** does not allow a user to first position the coupling member **130** into engagement with the flange member **124** and thereafter move the divider member along the length of the front bar engaging member **60** until it is positioned at its proper location. Instead, a user must strategically select where the divider member is to be positioned along the width of any particular shelf member **46** before coupling member **130** is engaged with flange member **124**. However, once the front portion of a particular divider member **96** is properly positioned into engagement with flange member **124**, the rear engagement means **100** previously described above can be utilized to again lock and hold the divider member **96** in proper position. In this regard, as previously explained, a user simply rotates the rear portion of the divider member **96** in an upward manner so as to allow the spring-like member **116** to engage the wire member **120** as previously explained. Unlike the engagement means **98** wherein "walking" of the front portion of the divider member **96** is controlled by the friction fit between wedge member **108** and flange member **106**, use of coupling means **130** and

engagement of the teeth **128** with any of the plurality of openings **124** prevents "walking" of the front portion of the divider member **96** over time.

[0062] FIG. **15** illustrates one embodiment of an end divider member **96'** which can be removably attached to the opposed side frame members **52** and **54** of each respective shelf member **46**. Since the end divider members **96'** will be located at the same location with respect to each individual shelf member **46**, each end divider member **96'** may include a pair of post members **134** which are positioned and located on the top flange member **102** so as to cooperatively engage corresponding keyhole slots **136** associated with both the top and bottom surfaces of each respective shelf side frame member **52** and **54** as best illustrated in FIGS. **6-8** and **11**. Like divider members **96**, end divider members **96'** are positioned and located such that the head portion of each divider post **134** is positioned within the larger opening associated with keyhole slot **136** and, once so positioned, each end divider member **96'** is moved forward towards the front of the corresponding shelf member **46** such that the head portion of each respective divider post **134** is moved into position within the narrow slot portion associated with each respective keyhole slot **136**. Removal of each end divider member **96'** is accomplished in reverse fashion. Since the keyhole slots **136** are located on the shelf frame side members **52** and **54**, attachment of end divider members **96'** thereto does not interfere with or obstruct the actual floor surface of each respective shelf member **46** thereby providing more usable space for product delivery. Also, importantly, since the keyhole slots **136** are provided on both opposite sides of the side frame members **52** and **54**, it is recognized and anticipated that the end divider members **96'** could be removably attached to either the shelf member located above a particular shelf member **46** being segregated for product distribution, or such end divider members could be attached to that particular shelf member **46** by inverting the end divider members **96'** and attaching such members to the keyhole slots **136** associated with the upper surface of each opposed side frame member **52** and **54** associated with that particular shelf member. This gives a user some versatility and flexibility depending upon the types of products being merchandised from a particular shelf member **46**. In addition, instead of inverting the divider member **96'** as just explained for attachment to the same shelf member **46**, the flange member **102** associated with end divider member **96'** illustrated in FIG. **15** could be repositioned and formed along the bottom edge portion **135** of end divider member **96'**. In this regard, the shape and size of the end divider member **96'** can vary and can take on any shape and size based upon the type of products to be merchandised from the shelf members **46**, **46'**, and/or **46"**.

[0063] It is also recognized and anticipated that the shelf divider members **96** with attachment means **98** and **100** associated therewith can likewise be utilized as end divider members for any particular shelf member **46** by merely attaching such divider members to the front and rear bar engaging members **60** and **70** of the shelf member located thereabove at the opposed side ends of the shelf member as previously explained.

[0064] FIGS. **21-23** illustrate still another engagement mechanism for removably attaching and engaging a shelf divider member **180** along the transversely positioned front and rear bar engaging members **60** and **70**. In this particular embodiment, the shelf divider member **180** includes front engagement means **186** and rear engagement means **98** associated with the top flange portion **182** of each respective shelf divider member **180**. As best illustrated in FIG. **22**, the front engagement means **186** is a spring divider guide plunger assembly which includes a guide bracket **188**, a plunger member **190** and a biasing member or load spring **192**. The guide bracket **188** is substantially U-shaped in configuration having upstanding wall portions **194** and **196** each having a slot (not visible) associated therewith for receiving opposite end portions of the plunger member **190** therethrough. The plunger member **190** is shaped and dimensioned so as to extend through the spring member **192** and may include a lip or flange portion **198**, or any other suitable holding means, for engaging and holding one end portion of the spring member **192** in a substantially fixed position therealong. As best shown in FIG. **22**, one end portion of the spring member **192** is biased against the flange portion or other means **198** located at an intermediate location along the plunger member **190**, and the opposite end portion of the spring member **192** is held and biased against bracket sidewall portion **196**. The front bar engaging member **60** associated with the underside portion of each respective shelf member includes a U-shaped flange member **200** having a slot or cavity **202** associated therewith adapted for receiving the front end portion **204** of the plunger member **190**. The U-shaped flange member **200** can be formed or otherwise attached to the front bar engaging member **60** by any suitable means and the member **200** extends substantially the full length of member **60**. In addition, the front end portion **204** of the plunger member **190** may likewise be elongated in shape in a direction along the slot or cavity **202** so as to provide additional contact area for holding the plunger **190** within the cavity **202**. In this regard, the cavity **202** is shaped and dimensioned so as to receive the front end portion **204** of the plunger member **190** and hold such plunger member within the cavity **202** when engaged therewith. The rear end portion of the plunger member **190** located on the outside portion of the bracket member **188** includes a stop member **206** positioned and located so as to prevent the plunger member **190** from exiting the slot associated with bracket sidewall member **196**. The bracket member **188** may be integrally formed with the top portion **182** of shelf divider member **180**, or bracket member **188** could be fixedly attached to the top flange member **182** by any suitable means such as through the use of rivets or other fastening means **208**.

[0065] As clearly shown in FIG. **22**, the front portion **204** of plunger member **190** can be easily and quickly positioned within the flange member **200** at any location along the full length of the front transverse bar member **60**. Once the front end portion **204** of plunger member **190** is engaged with the cavity **202**, further movement of the divider member **180** in a forward direction towards front bar engaging member **60** will allow the plunger member **190** to move in a rearward direction thereby compressing spring member **192** between the bracket sidewall **196** and the flange means or other means **198** associated with plunger member **190**. This biasing force exerted by spring member **192** will function to hold the divider member **180** in its proper position between the front and rear bar engaging members **60** and **70** as will be hereinafter explained with respect to the rear engagement means **98** associated with divider member **180**.

[0066] As clearly shown in FIGS. **21** and **23**, the rear divider member attachment means **98** is substantially identical to the front engagement means **98** discussed above with respect to divider member **96** except that it is positioned in a

rearward direction as clearly illustrated. As best illustrated in FIG. **23**, the rear bar engaging member **70** associated with the underside portion of each respective shelf member includes a cavity **104** formed by a flange member **106** which is formed with or otherwise attached to the rear bar member **70**. The cavity **104** of flange member **106** is again adapted to receive the wedge member **108** which is positioned and located on the top flange portion **182** of the divider member **180** towards the rear portion thereof as illustrated. The engagement of the wedge member **108** with the flange member **106** is identical to that previously described with respect to FIGS. **10** and **12** except that such engagement occurs after the front engagement means **186** is engaged with the cavity **202** associated with flange member **200**. As previously explained, the angular orientation of the top and bottom wedge portions **109** and **111** helps to guide the wedge member **108** into the cavity **104** and the engagement of wedge portions **109** and **111** with the tapers associated with the flange leg portions **112** and **114** likewise serve to frictionally hold the wedge member **108** within the flange member **106**. In addition, the biasing force generated by spring member **192** likewise serves to push and hold the wedge member **108** within flange member **106** as will be hereinafter explained.

[0067] Once the front portion **204** of plunger member **190** is positioned within the flange member **200**, the divider member **180** can be moved and further adjusted along the length of the front bar engaging member **60** until it is positioned at the proper location wherein, at that time, the spring member **192** can be fully or sufficiently compressed by further forward movement of the divider member relative to the front bar member **60** to allow the wedge member **108** to be received within flange member **106**. Once the spring member **192** is sufficiently compressed, the rear engagement means **98** is then raised into engagement with the rear bar engaging member **70** as previously explained. Fully or sufficiently compressing the spring member **192** allows the wedge member **108** to be positioned in alignment with flange member **106** and relieving the forward force or pressure of the plunger member **190** against flange member **200** will allow the spring member **192** to exert a biasing force in the rearward direction thereby exerting a force on wedge member **108** so as to drive and hold wedge member **108** within flange member **106**. This biasing force exerted by spring member **192** serves to lock and hold that particular shelf divider member **180** in position along the width of any particular shelf member. In essence, the spring member **192** exerts a biasing force in both the rearward and forward directions thereby holding both the wedge member **108** and the plunger member **190** within their respective flange members **106** and **200**. As with divider member **96**, since the flange members **106** and **200** extend substantially the full length of the front and rear bar engaging members **60** and **70**, any plurality of shelf divider members **180** can be positioned and locked into place so as to provide differently spaced product channels with respect to the particular shelf member positioned therebelow. Also, divider member **180** includes a plurality of openings **184** which serve as means for allowing cool circulated air generated inside a typical walk-in cooler to be more easily distributed and circulated between the respective shelf divider members as such cool air can easily pass through any plurality of divider members **180** so as to cool the respective products positioned therebetween.

[0068] Although several embodiments of the front and rear engagement means **98**, **100** and **186** associated with a particular shelf divider member has been disclosed herein, it is recognized and anticipated that a wide variety of different types of front and rear divider attachment means can be utilized so as to removably position each individual shelf divider member **96** and/or **180** at its proper location along the width of a particular shelf member **46** positioned thereabove.

[0069] FIG. **16** illustrates an exploded view of a front spacer member which may be optionally used in association with the present system **30** to selectively adjustably control the position of the framework structure **32** and the shelf members **46** relative to the cooler doors **24** when the present product merchandising system **30** is positioned adjacent thereto. Each spacer member **138** includes an elongated member **140** integrally formed with or otherwise attached to an inverted J-shaped flange member **142**, an elongated telescoping member **144**, and a pin member **146**. Elongated member **140** includes a plurality of openings extending therethrough such as the openings **148** for selectively adjustably positioning elongated member **144** in telescopic relationship thereto. In this regard, member **144** includes an opening **150** extending therethrough such that when the member **144** is insertably positioned over member **140**, opening **150** can be aligned with any one of the openings **148** to control the overall length of members **140** and **144** relative to flange member **142**. Once opening **150** is placed in registration with one of the openings **148**, pin member **146** is inserted therethrough to lock and hold the member **144** in telescopic relationship with member **140**. The channel opening **152** formed by the inverted J-shaped flange member **142** is sized and shaped so as to cooperatively receive cross-brace members **38** when positioned thereover.

[0070] As best illustrated in FIG. **2**, any plurality of front spacer members **138** can be positioned in cooperative engagement with the top and bottom cross-brace members **38** associated with the front portion of the merchandising system **30** and elongated member **144** can be telescopically position relative to member **140** to achieve a predetermined distance such that when the overall system **30** is positioned adjacent a cooler door **24**, the terminal end portion **154** of each respective spacer member **138** will engage the interior front wall surface **14** of cooler **10** (FIG. **1**) so as to control the distance between both the front upright support members **34** and front wall portion of each respective shelf member **46** relative to a closed cooler door **24**. In this regard, depending upon the angular orientation of each respective shelf member **46** as well as the type of products being positioned thereon, a user can selectively adjust and control the set back distance of each respective shelf member **46** relative to a corresponding cooler door **24**. Flange member **142** can be positioned anywhere along the length of the cross-brace members **38** and the size of the channel opening **152** relative to the size and shape of the cross-brace members **38** should be such that a substantially type friction fit is achieved so as to prevent movement of each respective front spacer member **138** along the length of cross-brace member **38** when in use. Although any plurality of front spacer members may be used in any particular application, as illustrated in FIG. **2**, it is contemplated that a pair of front spacer members **138** positioned on the top and bottom cross-brace members **38** respectively as illustrated in FIG. **2** will achieve the stated purpose.

[0071] It is also recognized that attachment means can be provided for holding and attaching each unit **30** in proper position to the interior front wall **14** of cooler **10** to further secure such units adjacent a respective cooler door **24**. This

attachment means can take the form of a tether or other member (not shown) attached both to the interior of the cooler front wall **14** and the unit **30**. Other attachment means are also envisioned.

[0072] FIG. **17** illustrates an optional work tray or stock shelf member **156** which is cooperatively engageable with the rear end portion of each respective shelf member **46** for allowing a stock person the ability to place new product or cases of products on the work tray **156** in close proximity to a particular shelf member **46** for loading or restocking that particular shelf member or adjacent shelf members. Work tray **156** includes a pair of opposed side frame members **158** each including an extension member **160** which is shaped and dimensioned for being cooperatively inserted and received within the openings **162** associated with each opposed side frame member **52** and **54** associated with each respective shelf member **46**. Extension members **160** are of sufficient length such that when the members **160** are inserted within the rear portion of shelf side frame members **52** and **54** through the openings **162**, the work tray **156**, with product positioned thereon, is adequately supported. As can be seen in FIG. **17**, the extension members **160** are vertically offset from the side frame members **158** such that when the work tray **156** is engaged with a particular shelf member **46**, the main support surface **164** is positioned below the product support surface or floor of that particular shelf member **46** to be loaded so as to allow a user to stock product on work tray **156** and still have clear access to the rear portion of shelf member **46** for loading and restocking such shelf member. Although the main support surface **164** of work tray **156** is illustrated as a wire grid support surface, it is recognized and anticipated that the support surface **164** can take on a wide variety of different sizes and shapes including a continuous flat supporting floor surface. Once a particular shelf member **46** has been restocked, the work tray **156** can be easily and quickly disengaged and removed from the openings **162** associated with a particular shelf member **46** and the work tray **156** can then be reengaged with a different shelf member **46** for accomplishing the same task. Other structures and configurations for work tray **156** are likewise contemplated and anticipated so long as work tray **156** is selectively removably engageable with the rear portion of each shelf member **46**.

[0073] As best shown in FIGS. **2** and **3**, the work tray **156** can be easily stored in an out-of-the-way position towards the top of the product merchandising system **30** through the use of engagement means associated with the upper portion of each respective rear upright support member **36**. In the particular embodiment illustrated in FIGS. **2** and **3**, this engagement means includes a respective tubular member **166** positioned and located on the inside portion of each respective upright support member **36**, the extension members **160** associated with the work tray **156** being cooperatively receivable and engageable within the openings associated with tubular members **166**. With the work tray **156** stored at the top of the unit **30**, additional shelf dividers **96** and **96'** and other system components such as additional front spacer members **138** can be easily and conveniently stored on the work tray **156**. Also, in this regard, such additional system components can likewise be stored on the top portion of the uppermost shelf member **46** associated with any particular system or unit **30**. It is also recognized and anticipated that a tubular member **166** could likewise be positioned and located on the inside portion of each respective upright support member **34** as illustrated in FIGS. **2** and **3**.

[0074] FIGS. **18** and **19** illustrate the construction and use of an optional drip pan or catch pan **168** which can be conveniently positioned at the bottom of the frame work structure **32** underneath the lowermost shelf member **46** to catch spillage and any glass breakage during normal use of the present system **30**. The drip pan **168** can take on a wide variety of different shapes (FIG. **18**) but it should be able to fit between the lowermost shelf member **46** and the front and rear cross-brace members **38** as illustrated in FIG. **19**. In this regard, the drip pan **168** merely rests upon the cross-brace members **38** and can be slidably positioned fore and aft relative to the framework structure **32** depending upon the orientation and inclination of the shelf members **46**. The drip pan **168** can be easily and quickly slidably positioned and removed from its resting position on top of cross-brace members **38** from the rear of the unit **30**. Use of the drip pan **168** will allow for easy and quick clean-up of any spillage or breakage of product containers during normal use and will eliminate spillage onto the interior floor surface **20** of the cooler **10** itself. It is also recognized and anticipated that the drip pan **168** could merely sit on the floor or other support surface underneath the entire unit **30** such as on the cooler floor **20**.

[0075] As best illustrated in FIGS. **6** and **20**, the front portion of each respective shelf member **46** includes an L-shaped flange member **170** having an upstanding wall portion **172** associated therewith which can function as a front wall stop member depending upon the size of the particular products being merchandised from a particular shelf member **46**. The flange member **170** can be attached to the underside portion of front transverse shelf member **48** and its corresponding side frame members **52** and **54** by any suitable means, the upstanding front wall portion **172** being spaced from the front edge portion of frame member **48** by a predetermined distance. This spacing allows a removably attachable product stop or front wall member **174** as best illustrated in FIG. **20** to be removably attachable to the front portion of each respective shelf member **46** so that front walls of different heights can be made interchangeable at the store depending upon the type of products being merchandised from each particular shelf member **46**. In this regard, the size and thickness of the front wall member **174** is such that it can be frictionally engaged with the slot or space formed between the front wall portion **172** and the front edge portion of shelf frame member **48**. The front product stop or wall member **174** can be provided in varying heights so that a user can easily and quickly selectively interchange a front product stop member **174** of the appropriate height based upon the type of products being merchandised from that particular shelf member **46**. The front product stop members **174** can also be provided as a see-through or clear wall member so as not to obstruct or obscure the view of the various products positioned therebehind. Also, as clearly illustrated in FIG. **20**, a conventional price channel **176** is attached to or otherwise integrally formed with the upstanding wall portion **172** of flange member **170** to provide for quick and easy change out of product and pricing information associated with each individual shelf member **46**. Still further, it is also recognized and anticipated that the shape of the front product stop member **174** can take on a wide variety of different shapes such as a curved design that curves back into the products positioned therebehind as illustrated at **179** in FIG. **20**. In addition, the upper end portion of the front wall member **174** may include a barb or other projection **177** projecting back towards the rear of the shelf member and towards the products positioned therebehind, this projection

177 serving as an additional stop means and preventing the upfront product from toppling over the front wall member **174**. Use of the barb or projection **177** also allows for the entire height of the product stop member **174** to be reduced since the barb **177** functions to prevent the upfront product, when sliding down the full length of an empty product channel, from toppling over the front wall member **174**. Still further, the product stop member **174** could be tinted, etched, routed or otherwise made to match the color or packaging associated with the products positioned there behind.

[0076] It is also recognized and anticipated that the front product stop member **174** may likewise include a channel member **175** located adjacent the top portion and extending along the full length thereof as best illustrated in FIGS. **19** and **20**. This additional channel member **175** provides additional flexibility to a user in that it allows for a larger product and/or pricing information panel to be associated with the front portion of each respective shelf member. For example, product indicia or pricing information can be associated with a panel member which would be engageable on one end portion thereof with the lower channel associated with the conventional price channel **176** and on its opposite end portion with the channel member **175**. This allows the indicia panel member to be larger than the panel member used with the conventional price channel **176**. In addition, a product and/or pricing information panel member could have its lower edge portion engageable with the space or slot formed between the upper channel associated with member **176** and the front product stop member **174** and it could have its upper edge portion engageable with the channel member **175**. This allows for an indicia panel member larger than the panel member used with the price channel **176** but smaller than the previously described panel member attached between the lower channel of member **176** and channel member **175**. This, in effect, gives a user three different options as to the size of any product and/or price indicia panel member that a user wants to display in front of each respective shelf member **46** when the front product stop member **174** is being utilized.

[0077] It is further recognized and anticipated that the overall frame work structure **32** illustrated in FIGS. **2** and **3** can likewise be free standing without any casters and without any mobility. In this regard, the bottom end portions of the upright support members **34** and **36** can merely rest upon a supporting floor surface, or such members can include traditional feet members, including adjustable feet members, such as the feet members **178** illustrated in FIG. **19**, which would be cooperatively engageable or otherwise associated with the bottom end portions of the respective upright support members **34** and **36**.

[0078] Although the present product merchandising system **30** has been described with respect to use in a walk-in type cooler environment, it is recognized and anticipated that the present system **30** could be utilized in any product merchandising application where products are being displayed and offered for sale to the general public. The present system also has utility and other applications such as storing applications where products are stored and held for re-stocking purposes or for other use at a later date and the present system has utility in providing easy access to a wide variety of different types of goods other than food and beverage products.

[0079] Although it is recognized that various acceptable materials of construction are available and could equally be employed to fabricate the various components of the present system **30**, it is usually preferred that such components such as the framework structure **32**, the shelf members **46**, and the divider members **96**, **96'** and **180** be fabricated from certain metals or other durable materials such as certain other metal alloys which are able to withstand moderate impact and mishandling and supply the necessary strength and rigidity depending upon the particular application and the load carrying capacity desired. It is also recognized that certain relatively strong plastic materials as well as other types of materials may likewise be used in fabricating some, if not all, of the components of the present system **30** so long as such materials are able to withstand the desired load carrying capacity of such units.

[0080] It is also important to note that the overall dimensions of the present system **30** as well as the configuration of many of the individual components associated therewith including shelf members **46**, **46'** and **46"** and divider members **96**, **96'** and **180** are subject to wide variations and may be sized and shaped into a variety of different sizes and shapes and configurations so as to be compatible with the size and shape of the particular product merchandising area into which the present system **30** may be employed, or to conform with any other space limitations, without impairing the teachings and practice of the present invention.

[0081] The present system **30** thus provides for a product merchandising system having a plurality of individually adjustable shelf members which can be quickly and easily maneuvered and adjusted to achieve any particular product orientation including a substantially flat horizontal shelf orientation as well as gravity feed orientations, and which system provides for a plurality of shelf divider members which can be selectively adjustable to accommodate differently sized products, and which are attachable to the shelf member located thereabove thereby enabling the actual floor space associated with each individual shelf member to be a single continuous floor uninterrupted or uninhibited with any type of divider walls or other protrusions or projections which would interfere with product positioning and location. Still further, when the casters **39** or other wheel means are associated with the merchandising unit **30**, the present units **30** can be used as part of a shuttle system for quickly changing out products within the cooler space, or within any other product merchandising area, once product depletion occurs. In this regard, one or more complete systems **30** could be fully loaded and held in abeyance until other units **30** positioned adjacent a particular cooler door, or in other product merchandising areas, are emptied or partially emptied. Change-out is easily accomplished by rolling the empty or partially emptied unit(s) away from the cooler door(s), or away from the other product merchandising area(s), and thereafter immediately positioning a previously restocked unit(s) **30** in the appropriate product merchandising area(s) for immediate access by customers. When mobile, the product merchandising units **30** are freely movable into and out of any product merchandising storage area such as the storage area associated with a cooler space, or from one location to a second location, when desired for loading and for presenting products to customers. Loading or restocking can take place in the interior storage space of a particular cooler, if desired, or such loading and restocking can take place in other back door areas. As a direct result of its mobility, the present system allows for a quick change-out of preferred products as a function of the time of day, or simply to replace sold out product.

[0082] Still further, it is also recognized and anticipated that since the plurality of openings **42** and plurality of slots **44**

extend through or are located on both opposite side walls of the front and rear upright support members **34** and **36**, a single stand-alone system comprising a plurality of the units **30** can be constructed within a cooler **10**, or elsewhere, so as to be fixedly attached or otherwise secured or positioned with respect to the cooler floor and cooler doors without any mobility. In this particular embodiment, each adjacent unit **30** would share a front and rear upright support member **34** and **36** with an adjacent unit **30**. In other words, the framework structure associated with a free-standing version of the present system without any casters or other mobility across a plurality of five cooler doors could be constructed with a total of six front upright support members **34** and six rear upright support members **36**. Other configurations, if necessary, depending upon the spacing between each respective cooler door, is likewise anticipated.

[0083] Thus, there has been shown and described several embodiments of a product merchandising system for use in association with walk-in type coolers and with other existing product merchandising areas, which system fulfills all of the objects and advantages sought therefore. Many changes, modifications, variations and other uses and applications of the present constructions will, however, become apparent to those skilled in the art after considering this specification and the accompanying drawings. All such changes, modifications, variations and other uses and applications which do not depart from the spirit and scope of the present invention are deemed to be covered by the invention which is limited only by the claims which follow.

1-41. (canceled)

42. A shelf member for use in a product merchandising unit comprising:

a frame structure having front and rear edge portions and opposed side edge portions;

a flange member spaced from said front edge portion by a predetermined distance and having an upstanding wall portion associated therewith, said upstanding wall portion including a price channel having a pair of spaced apart channel members associated therewith, said pair of spaced apart channel members adapted to receive a panel member therebetween;

a removably attachable front wall portion taller in height than the upstanding wall portion associated with said flange member, said removably attachable front wall portion being engageable with said predetermined space between the upstanding wall portion of said flange member and said front edge portion, said removably attachable front wall portion including a channel member located adjacent the top portion thereof.

43. The shelf member defined in claim **1** including a panel member extending between the lowermost channel member associated with the price channel of said flange member and the channel member associated with said removably attachable front wall portion.

44. The shelf member defined in claim **1** including a panel member extending between a space formed between the uppermost channel member associated with the price channel of said flange member and said removably attachable front wall portion, and the channel member associated with said removably attachable front wall portion.

45. The shelf member defined in claim **1** wherein said removably attachable front wall portion includes a projection located against the top portion thereof projecting away from said channel member towards the rear edge portion thereof.

46. In a product merchandising unit having a plurality of upright support members, each upright support member having a plurality of openings associated therewith, the improvement comprising:

at least one shelf member adjustably positionable along the length of said plurality of upright support members, said at least one shelf member having engagement means associated therewith for cooperatively engaging corresponding openings associated with said plurality of upright support members for adjustably positioning said at least one shelf member along the length of said upright support members;

said at least one shelf member including a front transverse member and a rear transverse member associated with the underneath portion thereof; and

at least one removably attachable shelf divider member for selectively attaching to the front and rear transverse members of said at least one shelf member anywhere along substantially their entire length, said at least one divider member extending downwardly from said at least one shelf member into the product display space of a shelf member located therebelow and having a plunger member and a wedge member associated therewith;

said front and rear transverse members each including a cavity extending substantially the full length thereof for removably attaching said divider member to said shelf member;

said plunger member being adapted to cooperatively engage the cavity associated with said front transverse member anywhere along the length thereof and said wedge member being adapted to cooperatively engage the cavity associated with said rear transverse member anywhere along the length thereof.

47-55. (canceled)

56. The improvement defined in claim **46** wherein said plunger member is biased by a biasing means.

57. The improvement defined in claim **56** wherein said biasing means includes a spring member.

58. (canceled)

59. The improvement defined in claim **46** wherein said shelf member includes a flange member spaced from the front edge portion thereof by a predetermined distance, said flange member having an upstanding wall portion associated therewith which functions as a front wall stop member for products positioned on said shelf member.

60. The improvement defined in claim **59** wherein said upstanding wall portion includes a price channel adapted for receiving a panel member having indicia thereon.

61. The improvement defined in claim **59** including a removably attachable front wall portion taller in height than the upstanding wall portion associated with said flange member, said removably attachable front wall portion being engageable with the predetermined space between the upstanding wall portion of said flange member and the front edge portion of said shelf member.

62. In a product merchandising unit having a plurality of upright support members, each upright support member having a plurality of openings associated therewith, the improvement comprising:

at least one shelf member adjustably positionable along the length of said plurality of upright support members, said at least one shelf member having engagement means associated therewith for cooperatively engaging corresponding openings associated with said plurality of

upright support members for adjustably positioning said at least one shelf member along the length of said upright support members;

said at least one shelf member including a front transverse member and a rear transverse member associated with the underneath portion thereof; and

at least one removably attachable shelf divider member for selectively attaching to the front and rear transverse members of said at least one shelf member anywhere along substantially their entire length, said at least one divider member extending downwardly from said at least one shelf member into the product display space of a shelf member located therebelow and having a plunger member and a wedge member associated therewith;

said front and rear transverse members each including a cavity extending substantially the full length thereof; for removably attaching said divider member to said shelf member;

said plunger member being adapted to cooperatively engage the cavity associated with said rear transverse member anywhere along the length thereof and said wedge member being adapted to cooperatively engage the cavity associated with said front transverse member anywhere along the length thereof.

* * * * *