United States Patent [19]

Perkins

[11] **3,861,763**

[45] **Jan. 21, 1975**

[54] **GIMBAL MOUNTING MEANS AND METHOD**

[75] Inventor: **Charles H. Perkins,** Richmond, Va.

[73] Assignee: **Robertshaw Controls Company,** Richmond, Va.

[22] Filed: **Apr. 27, 1973**

[21] Appl. No.: **355,060**

[52] **U.S. Cl.** ..... **308/2 R,** 74/471 XY, 248/183

[51] **Int. Cl.** **F16c 11/00**

[58] **Field of Search** ..... 308/2 R, 2 A; 74/5.5, 5 F, 74/471 XY; 248/179, 183; 403/57, 58

[56] **References Cited**

UNITED STATES PATENTS

703,020	6/1902	Thompson	308/2 R
917,799	4/1909	Salzmuler	248/183
3,095,754	7/1963	Mayor	74/471 XY
3,464,283	9/1969	Miller	308/2 R

OTHER PUBLICATIONS

Product Engineering 7/5/65, Maurice Conklin pages 68 & 69 "Pivots Do Many Jobs."

Primary Examiner—Charles J. Myhre
Assistant Examiner—R. H. Lazarus
Attorney, Agent, or Firm—Candor, Candor & Tassone

[57] **ABSTRACT**

A gimbal mounting means for a control device having a frame and a control part to be operated by the gimbal mounting means, the gimbal mounting means comprising a first member pivotally mounted by pivot means to a frame and a second member pivotally mounted by pivot means to the first member at a right angle to the pivot mounting of the first member. Each pivot means comprises a ball carried by the respective member and being received in a cylinder member carried by either the other member or the frame for receiving the ball therein to provide substantially circular line contact for pivot movement therebetween, each cylinder member having another ball press fitted therein to be abutted by the pivot ball being received therein so that only point contact is provided therebetween in a thrust load direction.

19 Claims, 6 Drawing Figures

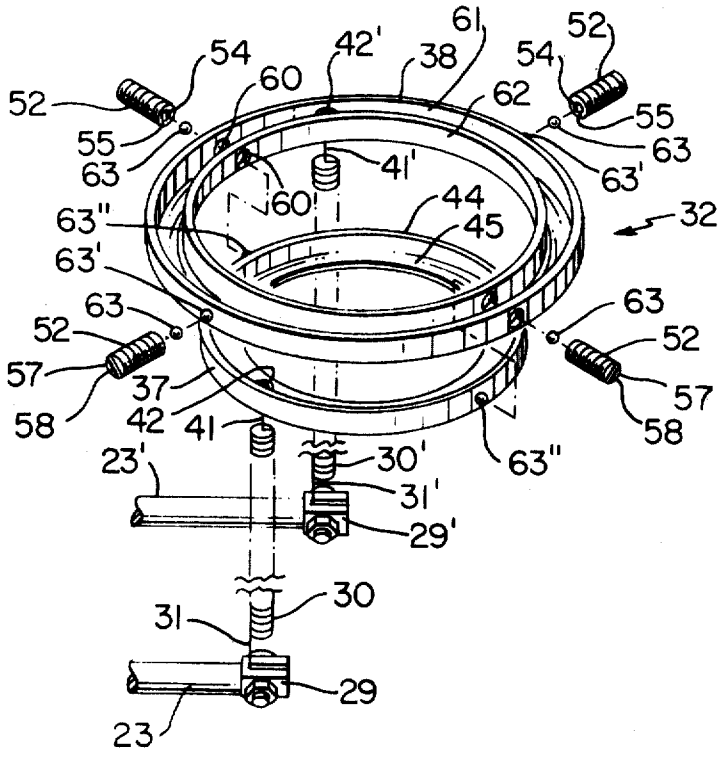

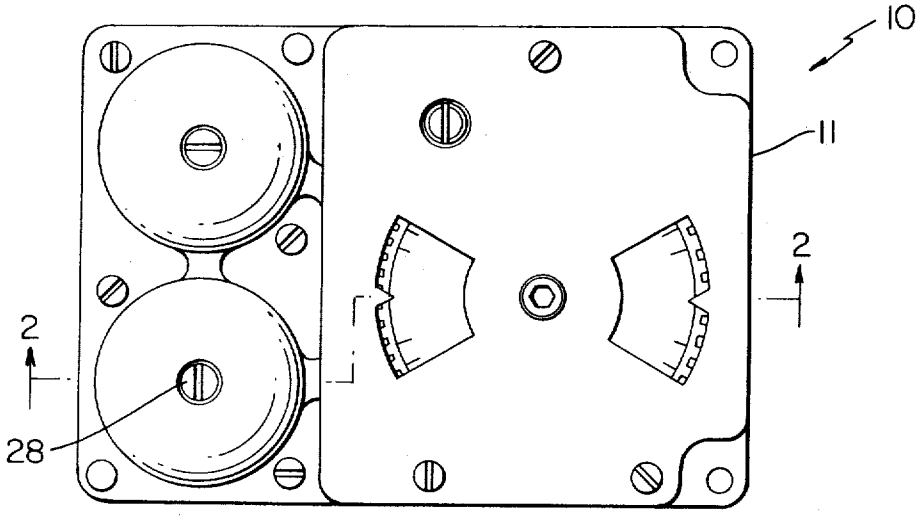

FIG. 1

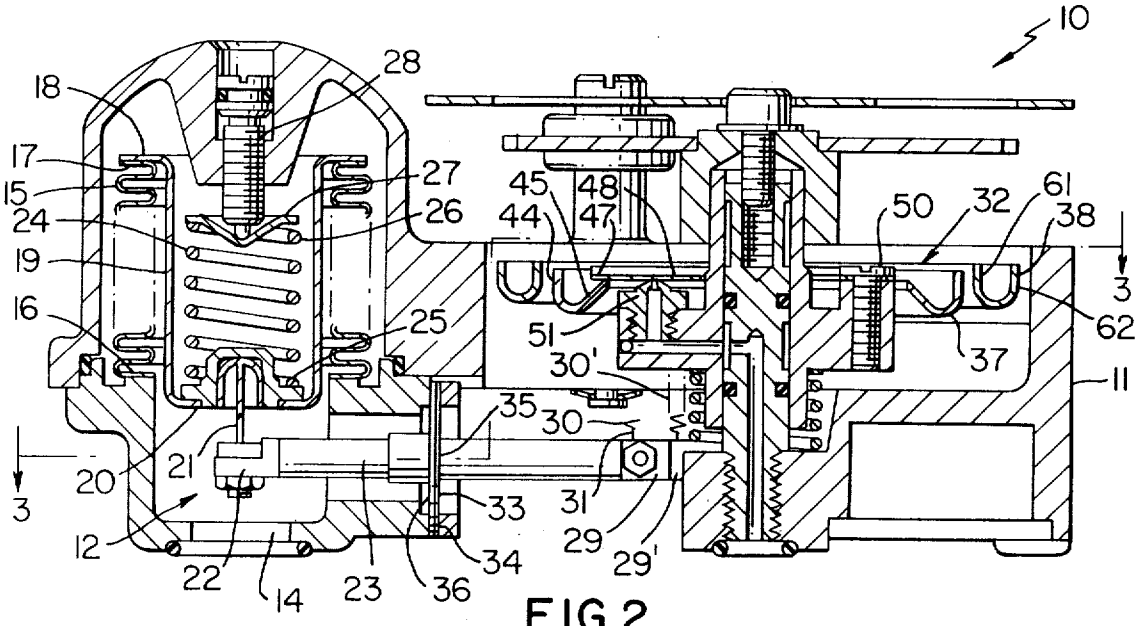

FIG. 2

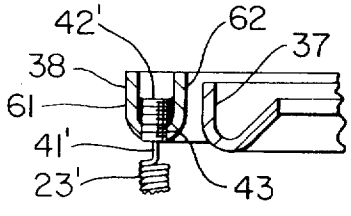

FIG. 4

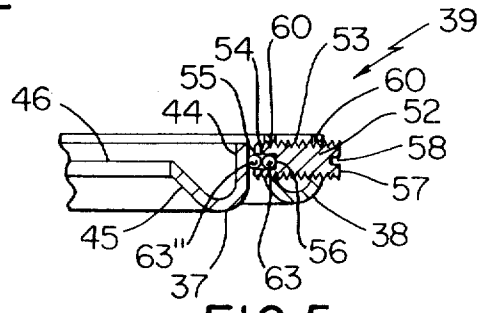

FIG. 5

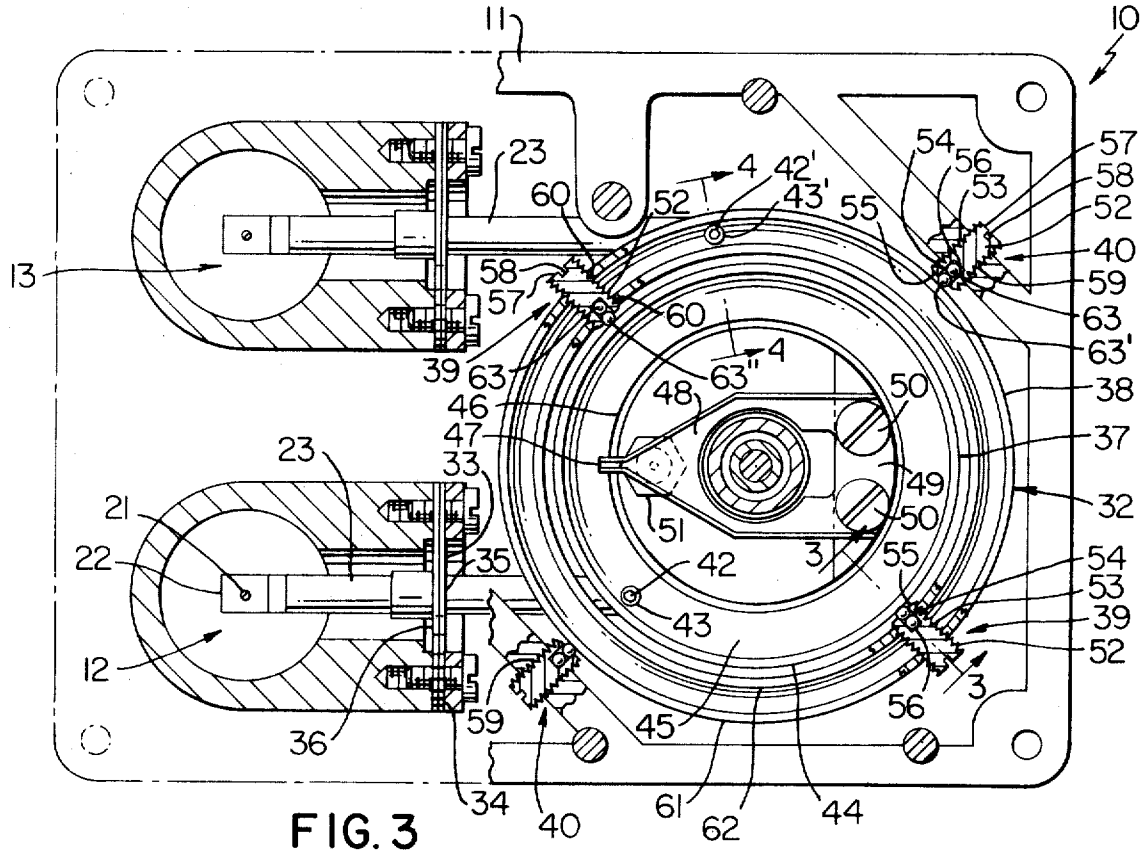
11
10
23
60
52
4
42'
43'
55
54
56
53
57
58
52
40
59
63
63'
13
58
57
60
39
63
63"
4
46
48
50
38
47
37
23
33
49
32
21
51
50
22
35
42
3
55
54
53
39
52
43
12
59
45
56
3
36
34
40
61
62
44

FIG. 3

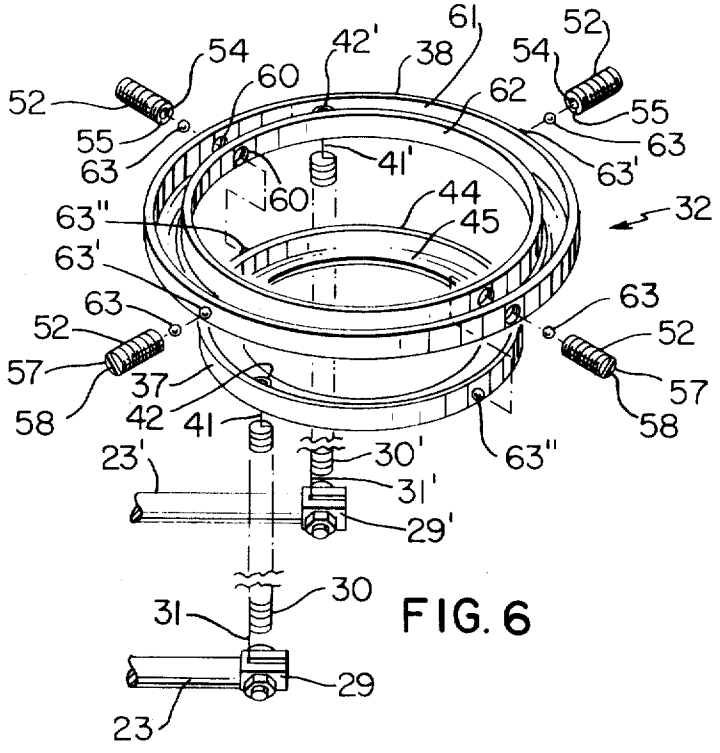
61
52
54
42'
38
54
60
62
52
55
55
63
63
41'
63'
60
44
32
63"
45
63'
63
63
52
52
57
37
57
58
42
41
58
63"
23'
30'
31'
29'
30
31
29
23

FIG. 6

GIMBAL MOUNTING MEANS AND METHOD

This invention relates to an improved gimbal mounting means and method for making such a gimbal mounting means or the like.

It is well known that a pair of concentrically disposed gimbal rings have been pivotally mounted together with the outer ring being pivotally mounted to a frame means of a control device wherein the pivotal movement of the rings is controlled by pneumatically operated movable parts of the control device so that the positioning of the gimbal rings will control the position of a flapper valve member relative to a vent nozzle or the like. However, it has been found in such prior known gimbal arrangement, no satisfactory means are provided for pivotally mounting the gimbal rings in a manner that will permit slight misalignment of the pivot means and still provide for accurate operation of the rings and not non-linearity of movement as in the case of prior known gimbal mounted rings.

Accordingly, it is a feature of this invention to provide an improved gimbal mounting arrangement wherein slight misalignments between the pivot points of the pivotally mounted members can be readily compensated for without sacrificing accuracy of operation thereof.

Another feature of this invention is to provide a method for making such a gimbal mounting means or the like.

In particular, one embodiment of this invention provides a control device having a frame and a gimbal mount carried thereby for operating a control part of the device and wherein the gimbal mount comprises a first member pivotally mounted by pivot means to the frame and a second member pivotally mounted by pivot means to the first member at a right angle to the pivot mounting of the first member. At least one of the pivot means means comprises means carried by the respective member for providing substantially circular line contact for the pivot movement thereof and substantially point contact therewith for absorbing thrust loading therebetween. Such pivot means can comprise a pair of balls carried by each pivot member on opposite sides thereof and being respectively received in cylinder means carried by the other member or the frame where the pair of balls of each member make substantially circular line contact with the cylinder means during the pivot movement of the respective member. Each cylinder means has a ball initially press fitted therein to be subsequently abutted by the pivot ball of the pivot member being received therein so that substantially point contact is provided therebetween in a thrust load direction therebetween.

Thus, if slight misalignment is provided between the pivot balls and the cylinder means receiving the same, a resulting circular line contact is still provided by each pivot ball and its respective cylinder means receiving the same as well as point contact of the pivot ball with the ball of the cylinder means whereby pivot movement of the pivot member is still positively maintained along a straight line disposed between the centers of the pivot balls of the respective pivot member.

Accordingly, it is an object of this invention to provide an improved gimbal mounting means having one or more of the novel features set forth above or hereinafter shown or described.

Another object of this invention is to provide a method for making such a gimbal mounting means or the like.

Other objects, uses and advantages of this invention are apparent from a reading of this description which proceeds with reference to the accompanying drawings forming a part thereof and wherein:

FIG. **1** is a top view of a control device utilizing the gimbal mounting means of this invention.

FIG. **2** is an enlarged cross-sectional view taken substantially on line **2—2** of FIG. **1.**

FIG. **3** is a cross-sectional view taken substantially on line **3—3** of FIG. **2.**

FIG. **4** is a fragmentary, cross-sectional view taken on line **4—4** of FIG. **3.**

FIG. **5** is a fragmentary cross-sectional view taken on line **5—5** of FIG. **3.**

FIG. **6** is an exploded perspective view of the improved gimbal mounting means of this invention.

While the various features of this invention are hereinafter described and illustrated as being particularly adapted to provide a gimbal mounting means for operating a flapper valve member, it is to be understood that the various features of this invention can be utilized singly or in any combination thereof to provide gimbal mounting means for other devices as desired.

Therefore, this invention is not to be limited to only the embodiment illustrated in the drawings, because the drawings are merely utilized to illustrate one of the wide variety of uses of this invention.

Referring now to FIGS. **1, 2** and **3,** the improved control device of this invention is generally indicated by the reference numeral **10** and comprises a frame structure or means **11** having two pressure chambers **12** and **13** therein with each pressure chamber **12** and **13** being formed in substantially the same manner whereby only the details of the pressure chamber **12** will be described with the understanding that such description applies to the structure of the pressure chamber **13** except that like parts of the pressure chamber **13** will be indicated by like reference numerals followed by a prime mark.

As illustrated in FIG. **2,** the pressure chamber **12** is adapted to be supplied pressure fluid through an inlet **14** formed in the frame means **11** and is partly defined by a tubular bellows construction **15** having its lower open end **16** secured to frame means **11** and its upper open end **17** closed by an outwardly flared flange **18** of a cup-shaped member **19** disposed within the bellows construction **15** and having its end wall **20** interconnected by a flexible tying means **21** to one end **22** of a pivotally mounted motion transmitting member **23** whereby up and down movement of the movable wall **20** causes clockwise and counterclockwise movement of the motion transmitting member **23** as will be apparent hereinafter.

A compression spring **24** has one end **25** bearing against the movable wall **20** of the cup-shaped member **19** while the other end **26** thereof bears against a spring retainer **27** that has its distance relative to the movable wall **20** controlled by a threaded adjusting member **28** carried by the frame means **11** whereby the force of the compression spring **24** acting downwardly on the wall **20** can be adjusted by the adjusting member **28.** In this manner, as the pressure differential across the wall **20** increases because of an increase in the pressure of the fluid being delivered to the chamber **12,** the resulting increased pressure differential across the wall **20**

causes the wall **20** to move upwardly in FIG. **2** in opposition to the force of the compression spring **24** to cause a clockwise pivoting movement of the motion transmitting member **23** whereby the other end **29** of the motion transmitting member **23** moves downwardly in the drawings and pulls downwardly on a tension spring member or mean **30** having its lower end **31** interconnected thereto. Thus, the tension spring member **30** transmits such pivoting movement of the motion transmitting member **23** to a gimbal mount of this invention that is generally indicated by the reference numeral **32** in the drawings and which will be hereinafter described. Conversely, a decrease in the pressure differential across the movable wall **20** caused by a decrease in the pressure of the fluid being delivered to the chamber **12** will cause the movable wall **20** to be moved downwardly by the compression spring **24** and thereby cause counterclockwise movement of the motion transmitting member **23** so that the end **29** of the motion transmitting member **23** moves upwardly in FIG. **2** and, thus, moves the tension spring means **30** upwardly to operate the gimbal mount **32** as will be apparent hereinafter.

The motion transmitting member **23** is pivotally mounted to the frame means **11** by a metallic flexure member **33** secured to the frame means **11** at its outer periphery **34** and secured to the motion transmitting member **23** at its inner periphery **35** whereby pivoting movement of the motion transmitting member **23** can take place because the flexure member **33** will flex between its inner and outer peripheries **35** and **34** to permit such pivoting movement. A diaphragm seal member **36** is provided to the left of the flexure member **33** to seal the chamber **12** from the exterior of the frame means **11** at the flexure member **33.**

Therefore, it can be seen that the motion transmitting members **23** and **23'** of the pressure chambers **12** and **13** are adapted to be pivoted by pressure changes in the respective chambers chambers **12** and **13** in the manner previously described.

The gimbal mount **32** of this invention comprises a pair of ring members **37** and **38,** the ring members **37** and **38** being concentrically disposed with the ring member **37** being smaller in diameter than the outer ring member **38** and being pivotally mounted thereto by a pair of like pivot means that are generally indicated by the reference numeral **39** so that the inner pivot ring **37** will pivot relative to the outer pivot ring **38** along a pivot axis disposed substantially between the pivot means **39** that are disposed substantially diametrically opposed each other relative to the inner pivot ring **37** whereby the pivot axis of its inner ring **37** is substantially the same as a diameter thereof. The outer pivot ring **38,** in turn, is pivotally mounted to the frame means **11** by a pair of like pivot means generally indicated by the reference numeral **40** along an axis that is disposed along a line between the pivot means **40,** such pivot line being substantially the same as a diameter of the outer ring **38** that is disposed substantially at right angles to the pivot axis provided by the pivot means **39** for the inner pivot ring **37.**

The tension spring means **30,** that has its lower end **31** interconnected to the end **29** of the motion transmitting member **23,** has its upper end **41** secured to a threaded member **42** threaded into a threaded bore **43** formed in the inner annular ring **37** whereby pivoting movement of the motion transmitting member **23** causes pivoting movement of the inner annular ring **37** about the pivot means **39.** Similarly, the end **29'** of the motion transmitting member **23'** for the pressure chamber **13** is interconnected to the lower end **31'** of a motion transmitting tension spring means **30'** that has its upper end **41'** secured to a threaded member **42'** secured in a threaded bore **43'** formed in the outer gimbal ring **38** in the manner illustrated in FIG. **4** whereby pivoting movement of the motion transmitting member **23'** causes the outer gimbal ring **38** to pivot on its pivot means **40.**

The inner pivot ring **37** has an outer cylindrical wall **44** and an inner angularly disposed wall **45** that terminates in substantially a knife edge **46** adapted to engage against a reduced end **47** of a resilient flapper valve member **48** having the other end **49** thereof secured to the frame means **11** by fastening members **50.** The end **47** of the flapper valve member **48** is disposed over a vent nozzle **51** of the control device **10** whereby the amount of fluid venting through the nozzle **51** is controlled by the position of the flapper valve member **48** relative thereto, the flapper valve member **48** having a natural resiliency that tends to move the flapper valve member **48** into full seating on the nozzle **51** to prevent any fluid flow therethrough. Thus, the pivotal movement of the gimbal mount **32** by the pressure means **12** and **13** in a manner hereinafter described controls the position of the flapper valve member **48** relative to the nozzle **51** and, thus, the amount of venting through the nozzle **51** in a manner well known in the art.

However, as previously stated, this invention provides improved means **39** and **40** for pivotally mounting the gimbal rings **37** and **38** and will now be described.

Each pivot means **39** and **40** includes a cylinder means **52** that is externally threaded at **53** and has a cylindrical bore **54** coaxially interrupting one end **55** thereof and terminating therein to define a flat end wall **56** spaced from the end **55** a certain amount as will be apparent hereinafter.

The other end **57** of each cylinder means **52** is provided with a slot **58** disposed diametrically across the same for receiving a screw driver or the like to permit rotational movement of the respective cylinder member **52** in an axial manner toward and away from its respective gimbal ring **38** or **37.** For example, the two cylinder means **52** for the pivot means **40** for the outer gimbal ring **38** are respectively threadedly disposed in threaded bores **59** formed in the frame means **11** as illustrated in FIG. **3** whereby the cylinder means **52** for the pivot means **40** are adapted to be axially moved toward and away from the gimbal ring **38** along a line that represents a diameter of the gimbal ring **38.**

In regard to the pivot mounts **39** for the inner gimbal ring **37,** the cylinder means **52** therefor are respectively threadedly disposed in threaded bores **60** formed in an aligned manner through opposed cylinder walls **61** and **62** of the outer ring **38** whereby the cylinder means **52** carried by the outer gimbal ring **38** are adapted to be axially moved along a line corresponding to a diameter of the inner ring **37** that is disposed at substantially a right angle to the diameter of the outer ring **38** along which the cylinder means **52** for the pivot means **40** are axially movable.

Each cylinder defining means **52** initially has a spherical metallic ball **63** press fitted into the bore **54** thereof so as to be disposed against the end wall **56** as illustrated, the diameter of the ball **63** being slightly larger

than the initial diameter of the bore **54** so that during the press fitting of the ball **63** in the bore **54** of the respective cylinder means **52**, such movement of the ball **63** from the exterior of the bore **54** to abut against the end wall **56** of the bore **54**, in effect, sizes and burnishes the bore **54** for a purpose hereinafter described even though the ball **63** remains firmly against the end wall **56** through the press fit relation thereof with the bore **54** of the cylinder means **52** for a purpose hereinafter described.

The pivot means **40** for the outer gimbal ring means **38** includes a pair of metallic balls **63'** identical to the balls **63** previously described and respectively secured to the outer cylindrical wall **61**, such as by welding, as illustrated in FIG. **6** so that the same are adapted to be received in the bores **54** of the cylinder means **52** of the pivot means **40** in the manner illustrated in FIG. **3** when the ring **38** is assembled to the frame means **11** whereby the secured balls **63'** will make substantially circular line contact with the cylinder means **52** at the bores **54** thereof for pivotal movement of the ring **38** substantially along a line drawn through the centers of the secured balls **63'** while the balls **63'** respectively make only point contact with the balls **63** of the cylinder means **52** in any thrust loading direction along the pivot line of the outer ring **38.**

Similarly, a pair of balls **63''** are secured to the outer cylindrical wall **44** of the inner ring **37** in a manner to be received in the bores **54** of the cylinder means **52** carried by the outer ring **38** in the manner illustrated in FIG. **3** as to provide circular line contact with the cylinder means **52** of the pivot means **39** whereby the inner ring **37** will pivot along a line disposed substantially between the centers of the balls **63''**. Also, the balls **63''** of the inner ring **37** merely make point contact with the balls **63** of the cylinder means **52** of the pivot means **39** in any thrust loading direction along the pivot line for the inner ring **37.**

It is preferred that the length of the bores **54** be so sized relative to the balls **61** and that the cylinder means **52** be so adjusted that the secured balls **63'** and **63''** will be received in the respective bores **54** of the cylinder means **52** a distance greater than the radius of the balls **63'** and **63''**, but a distance less than the diameter of the balls **63'** and **63''**.

In this manner, it can be seen that the gimbal rings **37** and **38** may be readily assembled to the frame means **11** by the respective pivot means **39** and **40** and be interconnected to the motion transmitting members **23** and **23'** by the tension spring means **30** and **30'** to operate in a manner now to be described.

As the motion transmitting member **23** is pivoted in a counterclockwise direction by the pressure differential acting across the movable wall **20** of the pressure chamber **20** decreasing, such upward movement of the right-hand end **29** of the motion transmitting member **23** causes the tension spring **30** to move upwardly and cause the inner gimbal ring **36** to pivot on its pivot means **39** in a manner to raise the end **47** of the flapper valve member **48** relative to the vent nozzle **51** to increase the vent flow therethrough. Conversely, as the pressure differential across the movable wall **20** of the pressure chamber **12** increases, the movable wall **20** moves upwardly in FIG. **2** and causes the motion transmitting member **23** to pivot in a clockwise direction whereby the tension spring **30** pivots the inner gimbal ring **37** on its pivot means **39** in a manner to permit the flapper valve member **48** to move closer to the vent nozzle **51** and thereby decrease the fluid flow therethrough. Similarly, an increase in pressure in the pressure chamber **13** causes the motion transmitting member **23'** to pivot in a clockwise direction in FIG. **6** and thereby cause the outer gimbal ring **38** to pivot on its pivot means **40** in such a manner that the inner gimbal ring **37** being carried thereby permits the flapper valve member **48** to move closer to the vent nozzle means **51** and thereby decrease the fluid flow therethrough. Conversely, a decrease in pressure in the pressure chamber **13** causes the motion transmitting member to pivot in a counterclockwise direction in FIG. **6** and thereby pivot the outer gimbal ring **38** on its pivot means **40** in a manner to cause the inner ring **37** to move the flapper valve member **48** away from the vent nozzle **51** to increase the fluid flow therethrough.

Thus, it can be seen that the pivot means **39** and **40** of this invention readily permit the gimbal rings **37** and **38** to pivot in the manner previously described for operating the flapper valve member **48.**

Further, because the line of contact between the pivot balls **63'** and **63'** and their respective cylinder members **52** is always circular, slight misalignment of the axes of the cylinder means **52** and the axes of the rings **37** and **38** defined by a line drawn between the centers of the respective pair of balls **63'** and **63''** secured thereto is accommodated without increasing bearing clearance since the bearing contact is always circular and the bearing circle can be freely positioned in space without changing the end play of the bearing structure. Thus, in effect, each pair of ball pivots acts as a universal joint, when adjusted.

Therefore, it can be seen that this invention not only provides an improved gimbal mounting means for a control device or the like, but also this invention provides an improved method for making such a gimbal mounting means or the like.

While the form and method of the invention now preferred have been disclosed and illustrated as required by the Patent Statute, it is to be understood that other forms and methods can be utilized and still come within the scope of the appended claims.

What is claimed is;

1. In a control device having a frame and a gimbal mount carried thereby for operating a control part of said device and wherein said gimbal mount comprises a first member pivotally mounted by pivot means to said frame and a second member pivotally mounted by pivot means to said first member at a right angle to the pivot mounting of said first member, the improvement wherein at least one of said pivot means comprises means carried by the respective member for providing substantially circular line contact for the pivot movement thereof, said one pivot means also comprising means cooperating with said means of said respective member to provide substantially point contact therebetween for thrust load absorbing purposes, said contact being spaced from said circular line contact.

2. In a control device as set forth in claim **1** wherein said means for providing substantially circular line contact comprises ball means carried by the respective member.

3. In a control device as set forth in claim **1,** said respective member comprising said first member, said means for providing substantially circular line contact comprising a pair of balls disposed on opposite sides of

said member and a pair of cylinder means carried by said frame and respectively receiving said balls therein.

4. In a control device having a frame and a gimbal mount carried thereby for operating a control part of said device and wherein said gimbal mount comprises a first member pivotally mounted by pivot means to said frame and a second member pivotally mounted by pivot means to said first member at a right angle to the pivot mounting of said first member, the improvement wherein at least one of said pivot means comprises means carried by the respective member for providing substantially circular line contact for the pivot movement thereof, said one pivot means comprising means cooperating with said means of said respective member to provide substantially point contact therebetween for thrust load absorbing purposes, said means of said respective member comprising ball means and said means of said one pivot means cooperating therewith comprising ball means for being disposed in contact with said first named ball means.

5. In a control device as set forth in claim **4,** said one pivot means comprising cylinder means having said ball means received therein whereby said ball means of said respective member is adapted to rotate relative to said cylinder means to provide substantially circular line contact therewith.

6. In a control device as set forth in claim **5,** said ball means of said pivot means having been press fitted in said cylinder means before said ball means of said respective member has been received in said cylinder.

7. In a control device as set forth in claim **6,** said cylinder means being axially adjustable toward and away from said ball means of said respective member.

8. In a control device having a frame and a gimbal mount carried thereby for operating a control part of said device and wherein said gimbal mount comprises a first member pivotally mounted by pivot means to said frame and a second member pivotally mounted by pivot means to said first member at a right angle to the pivot mounting of said first member, the improvement wherein at least one of said pivot means comprises means carried by the respective member for providing substantially circular line contact for the pivot movement thereof, said respective member comprising said first member, said means for providing substantially circular line contact comprising a pair of balls disposed on opposite sides of said member and a pair of cylinder means carried by said frame and respectively receiving said balls therein, and another pair of balls respectively disposed in said cylinder means and respectively being abutted by said balls of said first member so that substantially point contact is provided therebetween in a thrust load direction.

9. In a control device as set forth in claim **8,** said first member carrying another such pair of cylinder means respectively having a pair of balls therein, said second member having a pair of balls carried thereon on opposite sides of said second member and respectively received in said cylinder means of said first member to provide substantially circular line contact therewith for the pivot movement thereof and respectively abutting said balls of said cylinder means of said first member so that substantially point contact is provided therebetween in a thrust load direction.

10. In combination, a first member, and a second member pivotally mounted to said first member by pivot means, said pivot means comprising a pair of balls carried by said second member on opposite sides thereof and a pair of cylinder means carried by said first member and respectively receiving said balls therein whereby said second member is adapted to pivot on an axis defined by a substantially straight line passing through the centers of said balls while said balls respectively make substantially circular line contact with said cylinder means, said balls also respectively making point contact with said cylinder means in spaced relation to said circular line contact therewith.

11. A combination as set forth in claim **10** wherein said cylinder means each comprises a threaded adjusting member threadedly carried by said first member whereby said cylinder means can be axially adjusted toward and away from said balls of said second member.

12. In combination, a first member, and a second member pivotally mounted to said first member by pivot means, said pivot means comprising a pair of balls carried by said second member on opposite sides thereof and a pair of cylinder means carried by said first member and respectively receiving said balls therein whereby said second member is adapted to pivot on an axis defined by a substantially straight line passing through the centers of said balls while said balls respectively make substantially circular line contact with said cylinder means, and a second pair of balls respectively disposed in said cylinder means to be carried thereby, said second pair of balls respectively being abutted by the first named pair of balls whereby substantially point contact is provided therebetween in a thrust load direction.

13. A combination as set forth in claim **12** wherein said second pair of balls are press fitted into said cylinder means.

14. A combination as set forth in claim **12** wherein said first-named pair of balls each is disposed in said cylinder means a distance less than the diameter of the respective ball but greater than the radius thereof.

15. A method for pivotally mounting a second member to a first member comprising the steps of securing a pair of balls to opposite sides of said second member, securing a pair of cylinder means to said first member, and disposing said balls respectively in said cylinder means whereby said second member is adapted to pivot on an axis defined by a substantially straight line passing through the centers of said balls while said balls respectively make substantially circular line contact with said cylinder means as well as point contact with said cylinder means in spaced relation to said circular line contact therewith.

16. A method as set forth in claim **15** and including the step of forming said cylinder means each from a threaded adjusting member so as to be threadably carried by said first member whereby said cylinder means can be axially adjusted toward and away from said balls of said second member.

17. A method for pivotally mounting a second member to a first member comprising the steps of securing a pair of balls to opposite sides of said second member, securing a pair of cylinder means to said first member, disposing said balls respectively in said cylinder means whereby said second member is adapted to pivot on an axis defined by a substantially straight line passing through the centers of said balls while said balls respectively make substantially circular line contact with said cylinder means, and disposing a second pair of balls respectively in said cylinder means to be carried thereby

so that said second pair of balls are respectively abutted by the first named pair of balls whereby substantially point contact is provided therebetween in a thrust load direction.

18. A method as set forth in claim **17** and including the step of press fitting said second pair of balls respectively into said cylinder means.

19. A method as set forth in claim **17** wherein said step of disposing said first named balls into said cylinder means comprises the step of disposing said first named pair of balls respectively in said cylinder means a distance less than the diameter of the respective ball but greater than the radius thereof.

* * * * *