(19) Europäisches Patentamt
European Patent Office
Office européen des brevets

(11) **EP 2 103 764 A2**

(12) **EUROPEAN PATENT APPLICATION**

(43) Date of publication:
23.09.2009 Bulletin 2009/39

(51) Int Cl.:
E05B 73/00 *(2006.01)*

(21) Application number: **09155784.3**

(22) Date of filing: **20.03.2009**

(84) Designated Contracting States:
AT BE BG CH CY CZ DE DK EE ES FI FR GB GR HR HU IE IS IT LI LT LU LV MC MK MT NL NO PL PT RO SE SI SK TR
Designated Extension States:
AL BA RS

(30) Priority: **21.03.2008 US 38417 P**

(71) Applicant: **Nexpak Corporation**
Duluth GA 30096 (US)

(72) Inventors:
- **Jaeb, Michael S.**
  Millersburg, OH 44654 (US)
- **Wells, Jesse, D.**
  Canton, OH 44708 (US)
- **Casteel, Steve**
  Canal Fulton, OH 44614 (US)
- **Pepe, Anthony**
  Canton, OH 44718 (US)

(74) Representative: **Hanson, William Bennett et al**
Bromhead Johnson
19 Buckingham Street
London
WC2 6EF (GB)

(54) **Lockable merchandise storage container**

(57) A lockable merchandise storage container (2) has a lock slide (20) disposed within a lock housing (40) that is connected to a portion of the container. The container includes a base (10) and lid (12) with the lid movable between open and closed positions. The lid (12) has at least one hook (62). The lock housing (40) is connected to the base (10) with at least one snap fit connector (44). A lock slide (20) is disposed entirely within the lock housing. The hook (62) of the lid (12) extends into the lock housing (40) when the lid is in the closed position. In the locked position, the lock slide (20) engages the hook of the lid to prevent the lid (12) from moving from the closed position to the open position. An opener (22, 24) for the container (2) is adjustable to receive containers of different thicknesses.

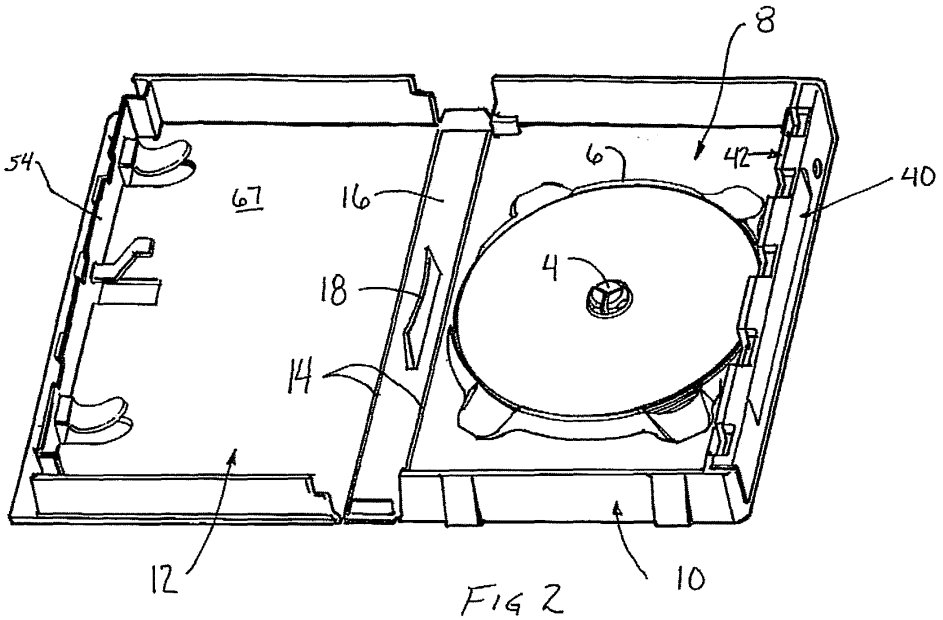

Fig 2

EP 2 103 764 A2

Description

BACKGROUND OF THE INVENTION

1. Technical Field

[0001] The present invention generally related to storage containers and, more particularly, to lockable merchandise containers.

2. Background Information

[0002] Various lockable merchandise storage containers are known and used in the art. Such containers are used in retail, rental, and lending establishments to (1) keep an item of merchandise safe and clean while the item of merchandise is on display, (2) increase the overall dimensions of an item of merchandise to frustrate shoplifters, and (3) to secure an Electronic Article Surveillance (EAS) tag to the item of merchandise. One problem with many existing lockable merchandise storage containers is that their locks must be removed and stored by the establishment when the container is removed from the establishment by a customer. These locks then must be reattached to the containers when the customer returns the rented or borrowed merchandise or, the case of a retail establishment, attached to new containers with new merchandise. Those who use lockable merchandise storage containers desire a container with an integrated lock. Although different versions of these containers have been developed, room remains for improving the manner in which the devices are assembled, the security and strength of the device, and their ease of use.

SUMMARY OF THE INVENTION

[0003] The invention provides a lockable merchandise storage container having a lock slide carried in a housing that is connected to a portion of the container. In one configuration, the invention provides a lockable merchandise storage container having a base and lid; the lid movable between open and closed positions; the base and lid defining a merchandise storage compartment adapted to receive an item of merchandise; a lock housing connected to the base with at least one snap fit connector; a lock slide disposed entirely within the lock housing; the lock slide movable between locked and unlocked positions; the lid having at least one hook; the hook of the lid extending into the lock housing when the lid is in the closed position; and in the locked position, the lock slide engaging the hook of the lid to prevent the lid from moving from the closed position to the open position.

[0004] The lock housing of the container may include loops that interact with the lid to secure the lock housing in place.

[0005] The invention also provides a locking finger arrangement wherein the locking fingers form a locking configuration between the housing and the lock slide. The locking fingers are configured to lock the lock slide in the locked position and to hold the lock slide in the unlocked position. In one configuration, the invention provides a locking finger arrangement having a block that is disposed between the lock housing and the lock slide when the locking finger is in the engaged position.

[0006] The invention further provides an opener for the container. The opener is adjustable so that it may be used with containers of different thicknesses. In one configuration, the opener has a body having a first portion and a second portion that cooperate to define a channel adapted to slidably receive the lockable merchandise storage container; the body carrying at least one magnet; the channel having a width; and the first portion being selectively movable with respect to the second portion to change the width of the channel.

[0007] The container may be provided with an indicator that shows the locked and unlocked conditions of the lock slide.

BRIEF DESCRIPTION OF THE SEVERAL VIEWS OF THE DRAWINGS

[0008]

FIG. 1 is a perspective view of an exemplary lockable merchandise storage container in a closed and locked configuration.

FIG. 2 is a perspective view of the exemplary lockable merchandise storage container in an open and unlocked configuration.

FIG. 3 is a perspective view of an exemplary opener that may be used to lock and unlock the lockable merchandise storage container.

FIGS. 4 and 5 are perspective views of an exemplary alternative opener than may be selectively configured for lockable merchandise storage containers having different widths.

FIG. 6 depicts end views of the different configurations of the opener of FIGS. 4 and 5.

FIG. 7 is a perspective view another exemplary configuration of the lockable merchandise storage container but showing the housing removed.

FIG. 8 is a perspective view of the housing.

FIG. 9 is a perspective view of a metal locking finger used to lock the lock slide in the locked and unlocked positions.

FIG. 10 is a perspective view of the lock slide.

FIG. 11 is a perspective view of a different configuration for the housing.

FIG. 12 is a perspective view of the engagement of the lid with the housing.

FIG. 13 is a view of the locking finger of FIG. 9 disposed in the lock slide of FIG. 10 and the housing of FIG. 8 wherein the locking finger is engaged with the catch of the wall.

FIGS. 14A-14D are partial schematic views showing an alternative lock slide and housing in locked and

unlocked positions with the housing cross hatched for clarity.

Similar numbers refer to similar parts throughout the specification.

DETAILED DESCRIPTION OF THE INVENTION

[0009] Exemplary configurations of lockable merchandise storage containers are indicated generally by the numeral 2 in the accompanying drawings. Container 2 may be used in retail and renting establishments to protect merchandise while the merchandise is displayed to the customer. Container 2 also increases the overall exterior dimensions of the item of merchandise in order to make it harder for a shoplifter to conceal the item of merchandise on his person. Further, container 2 may be used to associate an EAS tag with the item of merchandise in manner that makes it difficult for a shoplifter to remove the EAS tag. Container 2 may be sold to the customer along with the item of merchandise carried within container 2. Container 2 also may be used in rental or lending establishments to prevent unauthorized removal of a rental item.

[0010] In the exemplary configurations of the invention depicted in the drawings, lockable merchandise storage container 2 is configured to retain a disc-shaped item of media such as a CD or DVD. As such, container 2 includes a disc hub 4 and a disc nest 6. Disc hub 4 snaps through the central opening of a media disc to hold the media disc in chamber 8. In other configurations of container 2, the storage chamber 8 of container 2 may be configured to hold a different item of merchandise such as a package of razor blades, an inkjet cartridge, a package of teeth whitening strips, a small tool, a package of batteries, a medical device such as a hearing aid, or a small tool set. There are a wide variety of potential uses for container 2. The exemplary configurations shown in the drawings depict a media disc container that may be used in a library lending establishment. In this configuration, container 2 is displayed to the library customer with an item of media locked within container 2. The library customer takes the locked container to a checkout desk where the librarian unlocks container 2 with an opener and deactivates the EAS tag (or passes the unlocked container around a gate alarm) so that the library customer does not activate the theft alarm when leaving the library. The customer leaves the library with the unlocked container, uses the item of media, and returns the unlocked container to the library before the due date. The librarian then checks the contents of container 2, locks the container 2, and replaces container 2 on the library shelf for the next customer.

[0011] Turning now to the structure, container 2 includes a base 10 and lid 12. Lid 12 is hinged to base 10 and movable between open and closed positions. A pair of spaced living hinges 14 connect lid 12 to base 10. A spine 16 is disposed between hinges 14. Spine 16 may include a holding structure 18 that helps hold the merchandise within storage chamber 8. When lid 12 is in the closed position, storage chamber 8 is entirely enclosed by the body of container 2. Base 10 and lid 12 may have full or partial overlapping walls that form double walls when lid 12 is in the closed position.

[0012] Container 2 includes a lock that is selectively moved by the user between locked and unlocked conditions with an opener. The lock includes a lock slide 20 that is disposed entirely within the outer perimeter of container 2 when lock slide 20 is in its locked and unlocked positions. No portion of lock slide 20 extends beyond the perimeter of container 2 and thus cannot be manipulated when lock slide 20 is locked or unlocked. Lock slide 20 is selectively moved back and forth between its locked and unlocked positions by moving lock slide 20 through a magnetic field or by moving a magnetic field relative to lock slide 20. Two exemplary openers 22 and 24 are depicted in FIGS. 3-6. Each opener 22 and 24 defines a channel 34 that is long enough (or open at both of its ends) to allow container 2 to move back and forth. Openers 22 and 24 have at least one magnet 25 that provides the required magnetic field.

[0013] Lock slide 20 includes two locking fingers 26 that are each biased toward an engaged position. Each locking finger may be moved to a disengaged position when placed in the magnetic field provided by the magnet of the opener. One of two locking fingers holds lock slide 20 in its locked condition while the other locking finger holds lock slide 20 in its unlocked condition. Locking fingers 26 thus require container 2 to be passed through an opener to both unlock and lock the lock of the container. This ensures that the customer in a lending application will not unintentionally lock container 2 when container 2 is away from its home establishment.

[0014] Opener 24 has a first portion or movable wall 30 that is movable with respect to a second portion or base wall 32 to adjust the width of the channel 34 for different thickness containers 2. Opener 24 may have a holder that releasably maintains the desired position of opener 24. The first and second portions may define indentations and corresponding protuberances may be used to hold the position of movable wall 30 in the desired locations with a releasable snap fit. A mechanical fastener (such as a pin or threaded member) or a clamp also may be used to hold the position of wall 30 with respect to wall 32. As shown in FIG. 4, movable wall 30 has guides 36 that slide in slots 38. The indentations and protuberances may be defined by guides 36 and slots 38.

[0015] Openers 22 and 24 may be configured with a single magnet on one side of channel 34 or with a magnet disposed on opposite sides of channel 34 and offset along the length of channel 34. When container 2 is slid through channel 34 with its lock facing down, locking fingers 26 are passed through the magnetic field and, when disengaged, lock slide 20 is held in position relative to the movement of the body of container 2 so that lock slide 2 is moved.

[0016] Container 2 also includes a lock housing 40 that

may be carried by base 10 or lid 12. In the exemplary configurations of container 2, housing 40 is carried at the front of base 10 opposite spine 16. In other configurations, housing 40 may be carried along the top or bottom sidewall of base 10, the front of lid 12, or the top or bottom sidewall of lid 12. The features described herein related to housing 40 are applicable regardless of the relative position of housing 40 and spine 16. As such, the term "base" refers to the portion of container 2 to which lock housing 40 is connected.

[0017] Housing 40 is formed completely independent from base 12 as a separate part or is formed with a connection to base 12, such as a living hinge, so that it may be moved into its installed position as shown in FIGS. 1 and 2 where it is snap fit in place. Base 12 and lid 10 cooperate to define a recessed area that receives housing 40 when lid 12 is closed. Housing 40 is surrounded on five sides by base 10 and lid 12 when housing 40 is installed and lid 12 is closed. Housing 40 does not protrude from the recess so that a shoplifter does not have a protruding part to strike against a hard surface in an attempt to break housing 40.

[0018] In the exemplary drawings, container 2 includes an inset front wall 42 that cooperates with housing 40 to contain lock slide 20. Inset front wall 42 is parallel to spine 16 when lid 12 is closed. In another configuration, wall 42 may be an integral part of housing 40 such that housing 40 contains lock slide 20 and is secured to base 10 or lid 12 with connectors similar to those shown in the drawings. In the configuration of container 2 shown in the drawings, wall 42 is integrally formed with base 12 in order to strengthen container 2 and to provide a strong connection between housing 40 and base 12.

[0019] Lock slide 20 is carried within container 2 between a cavity defined between housing 40 and wall 42. Housing 40 is snap fit to base 10 with a plurality of legs 44 that define locking surfaces. The snap fit connectors are ones that may be pushed into place but not readily removed. The flexibility and resiliency of legs 44 allow the snap fit connection to function. The locking surfaces may be configured for a one-way snap-fit connection with base 10 or may be configured to be releasable so that housing 40 may be removed. Legs 44 may be solid as shown in FIG 8 or split as shown in FIG. 11. Split legs 44 may have more aggressive locking surfaces to provide a more secure connection between housing 40 and base 12. Legs 44 slide into corresponding leg openings 46 defined by base 10 or wall 42. In another configuration, the position of legs 44 and openings 46 may be reversed. Housing 40 also may define wedge-shaped openings 48 at its ends 50 that are engaged by corresponding wedge-shaped structures 52 on base 10. Elements 48 and 52 may be reversed. The end wall 54 of lid 12 defines notches that accommodate legs 44 when lid 12 is closed. Housing 40 also may include legs 45 that snap fit into openings 47. Elements 45 and 47 may be reversed. In the configuration of FIG. 11, housing includes a pair of loops 49 that pass through wall 42 and are engaged by stops 51 defined by portions of wall 54 as shown in FIG. 12. This engagement strengthens the connection between housing 40 and base 10 and lid 12 when lid 12 is closed.

[0020] Inset front wall 42 defines a hook opening 60 aligned with each hook 62 projecting from lid 12. When housing 40 is carried by lid 12, then hooks 62 are carried by base 10. Housing 40 defines an opening 64 that is aligned with each opening 60 when housing 40 is connected to base 12. When lid 14 is moved to the closed position, each hook 62 on lid 14 passes through openings 60/64 to position at least the locking portion 66 of hook 62 within the cavity defined between housing 40 and interior wall 42. Hooks 62 may be L-shaped and secured to both the top wall 67 of lid 12 and the front wall 68 of lid 12. When lid 12 is closed, locking portions 66 of hook are aligned with lock slide 20 so that lock slide 20 may engage locking portions 66 to secure lid 12 to base 10.

[0021] Housing 40 defines an indicator opening 70 that allows indicators 72 and 74 of lock slide 20 to be viewed from the outside of container 2. Indicators 72 and 74 having different appearances so that the user can readily determine the state of lock slide 20. Indicators 72 and 74 may be provided in different colors or be in the form of the word "locked" and "unlocked" or graphical symbols for the locked and unlocked states of lock slide 20.

[0022] In the configuration of FIG. 10, lock slide 20 carries a pair of locking fingers 26 (FIG. 9) at the locations indicated by the reference numeral 78. Locking fingers 26 may be snap fit into lock slide 20 at these locations. Locking fingers 26 face opposite directions and are each biased to their engaged positions. Each locking finger 26 may be fabricated from a metal that may be moved to a disengaged position under the influence of a magnetic field as described above. At each location 78, lock slide 20 defines a ramp that aligns locking finger 26 with a catch 80 that is defined by wall 42. Lock slide 20 defines openings 82 that are aligned with each locking finger 26 so that there is less plastic between locking finger 26 and the magnet. In other configurations, catches 80 may be defined by housing 40. One locking finger 26 is configured to hold lock slide 20 in the locked position while the other locking finger 26 is configured to hold lock slide 20 in the unlocked position. Locking fingers 26 have openings 84 at one end that allow fingers 26 to be snapped into place. Locking fingers 26 have enlarged ends 86 that may be formed by wrapping extra material into a roll. These enlarged ends help fingers move under the influence of the magnetic force. In another configuration, the position of locking fingers 26 and catches 80 may be reversed.

[0023] Lock slide 20 defines a recess 90 that accommodates leg 45. Legs 45 may be used to stop lock slide 20 from moving and to align locking fingers 26 with catches 80.

[0024] Lock slide 20 defines a pair of spaced openings 92 that receive protuberances 94 on housing 40 to secure lock slide 20 to housing 40 in a snap fit that allows lock slide 20 to slide back and forth within housing 40.

[0025] As described above, lock slide 20 is moved back and forth when container 2 is slide through opener 22 or 24 and the engaged locking finger 26 is moved to its disengaged position by the magnetic field. Additional metallic structures may be added to lock slide 20 to help it stay in place (and thus move relative to housing 40) while container 2 is slid through opener 22 or 24. When locking fingers 26 are carried by base 12 or housing 40, a metallic structure is added to lock slide 20 so that it is held in place relative to base 12 as container 2 is moved through opener 22 or 24.

[0026] Lock slide 20 defines openings 100 that are configured to receive hooks 62 when lock slide 20 is in the unlocked position and lid 12 is moved from the open position to the closed position. The walls of the lock slide body disposed adjacent openings 100 are slid over locking portions 66 when lock slide 20 is moved from the unlocked position to the locked position while lid 14 is closed. Once locking portions 66 are under the adjacent wall portions of lock slide 20, hooks 62 are secured to lock slide 20 and lid 14 cannot be opened.

[0027] An EAS tag 102 may be carried by lock slide 20, housing 40, base 10, or lid 12 so that it is contained within container 2 in a location where it cannot be readily removed by a customer when container 2 is locked.

[0028] Container 2 may be used in a library to keep merchandise locked while on display. When a customer or renter checks out, the clerk moves lock slide 20 to the unlocked position where one of locking fingers 26 locks lock slide 20 in the unlocked position. The user or renter then takes container and merchandise home to use. When the merchandise is returned, the clerk moves lock slide 20 back to the locked position and returns container 2 to the display area. Container 2 may also be used in a self check out area of a library where the user or renter unlocks lock slide 20 with an opener 22 or 24.

[0029] Another configuration for lock slide 20 and housing 40 is shown in FIGS. 14A-14D. These views show lock slide 20 disposed in housing 40 in both the locked and unlocked conditions. Lock slide 20 is locked in FIGS. 14A and 14D and hooks 62 are depicted schematically. Lock slide 20 is unlocked in FIGS. 14B and 14C. In this configuration, locking fingers 26 engage housing 40 when locking fingers 26 are in the engaged position to prevent lock slide 20 from moving relative to housing 40. Locking fingers 26 carry a block 120 that is seated in a recess 122 defined by housing 40 when locking fingers 26 are in the engaged position. Block 120 may be fabricated from a metal that is movable under magnetic force. The thin biasing members of locking fingers 26 may be spring steel and positioned to bias blocks 120 toward the engaged position shown in FIGS. 14B and 14D. Blocks 120 may be formed with a slit that receives the end of the thin metal portion of locking finger 26. Block 120 may be crimped to the thin metal portion, welded, soldered, or adhesively connected. Blocks 120 slide back and forth under tabs 124 carried by lock slide 20.

[0030] FIGS. 14A and 14B show the locking finger 26 that holds lock slide 20 in the unlocked position. In FIG. 14A, lock slide 20 is locked and block 120 is not disposed in recess 122. When lock slide 20 is moved to the unlocked position, lock slide is moved to the rights in FIG. 14B until block 120 is aligned with recess 122 and locking finger 26 biases itself outwardly to snap block 120 into engagement with housing 40.

[0031] FIGS. 14C and 14D show the locking finger 26 that holds lock slide in the locked position. In FIG. 14C, lock slide is unlocked and block 120 is not disposed in recess 122. When lock slide is moved to the locked position of FIG. 14D, lock slide 20 is moved to the left until block 120 is aligned with recess 122 and locking finger 26 biases itself outwardly to snap block into engagement with housing 40.

[0032] The engagement of blocks 120 with housing 40 secures movement of lock slide 20 when container 2 is struck against a hard surface. The biasing force of the thin metal portions of locking fingers and the holding function of tabs 124 maintains the engaged position of blocks 120 making container 2 more secure against shoplifters. These locking fingers easily and reliably move between the locked and unlocked positions to so user may lock and unlock container with little expertise or practice thus making container 2 desirable for automated checkout systems. These locking fingers are also strong because they do not rely solely on the thin biasing member to hold the lock slide in place.

[0033] In the foregoing description, certain terms have been used for brevity, clearness, and understanding. No unnecessary limitations are to be implied therefrom beyond the requirement of the prior art because such terms are used for descriptive purposes and are intended to be broadly construed.

[0034] Moreover, the description and illustration of the invention is an example and the invention is not limited to the exact details shown or described.

Claims

1. A lockable merchandise storage container comprising:

a base and lid; the lid movable between open and closed positions;

the base and lid defining a merchandise storage compartment adapted to receive an item of merchandise;

a lock housing connected to the base with at least one snap fit connector;

a lock slide disposed entirely within the lock housing; the lock slide movable between locked and unlocked positions;

the lid having at least one hook;

the hook of the lid extending into the lock housing when the lid is in the closed position; and

in the locked position, the lock slide engaging

the hook of the lid to prevent the lid from moving from the closed position to the open position.

2. The container of claim 1, wherein the base and lid define a recess that receives the lock housing when the lid is in the closed position.

3. The container of claim 1 or 2, further comprising a disc hub.

4. The container of claim 1, 2 or 3, wherein the lock housing includes at least one loop that extends through a portion of the base; the lid having a stop disposed in the loop when the lid is in the closed position.

5. The container of claim 4, wherein the lock housing has first and second ends and a loop disposed adjacent each of the ends; each of the loops extending through a portion of the base; and the lid having a stop disposed in each of the loops when the lid is in the closed position.

6. The container of any preceding claim, further comprising first and second locking fingers that are each movable between engaged and disengaged positions; the engaged position of the first locking finger locking the lock slide in the locked position; and the engaged position of the second locking finger holding the lock slide in the unlocked position.

7. The container of claim 6, wherein each locking finger is movable from the engaged position to the disengaged position with magnetic force.

8. The container of claim 6 or 7, wherein each locking finger includes a block that is disposed between the lock housing and the lock slide when the locking finger is in the engaged position.

9. The container of claim 8, wherein each locking finger includes a thin biasing member that biases the block toward the engaged position.

10. The container of claim 8 or 9, wherein the lock housing defines a recess that receives the block when the locking finger is in the engaged position.

11. The container of claim 8, 9 or 10, wherein the lock slide includes a tab disposed over a portion of the block; the block slidably positioned under the tab.

12. The container of any preceding claim, further comprising an indicator that shows the locked and unlocked positions of the lock slide.

13. The container of any preceding claim, wherein the base includes a wall having a plurality of spaced leg openings; the lock housing having a leg having a locking surface disposed in each of the leg openings to secure the lock housing to the base.

14. The container of claim 13, wherein each of the legs is split into two portions; each of the portions having a locking surface.

15. The container of claim 13 or 14, wherein the wall defines a plurality of hook openings; the lid having a hook aligned with each of hook openings.

16. The container of claim 15, wherein the lock housing defines a hook opening aligned with each of the hook openings of the base wall; each of the hooks extending through the hook openings of the base wall and the lock housing when the lid is in the closed position.

17. An opener for a lockable merchandise storage container; the opener comprising:

a body having a first portion and a second portion that cooperate to define a channel adapted to slidably receive the lockable merchandise storage container; the body carrying at least one magnet;
the channel having a width; and
the first portion being selectively movable with respect to the second portion to change the width of the channel.

18. The opener of claim 17, wherein one of the first and second portions defines a slot and the other of the first and second portion includes a guide slidably disposed in the slot.

19. The opener of claim 17 or 18, further comprising a holder that releasably holds the position of the first portion with respect to the second portion.

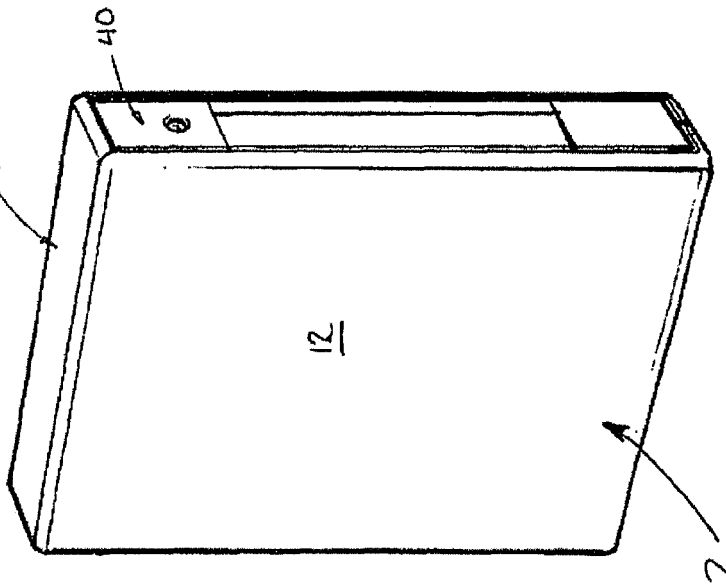

Fig 1

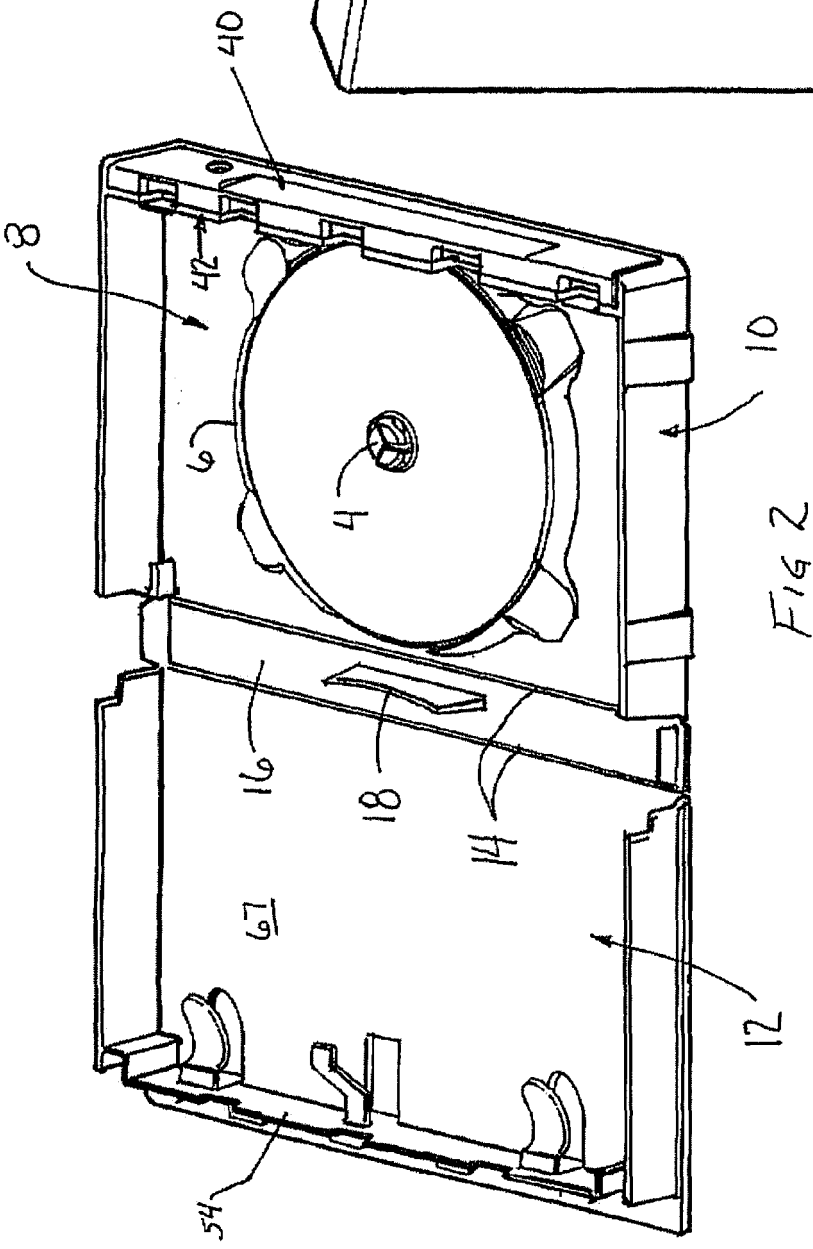

Fig 2

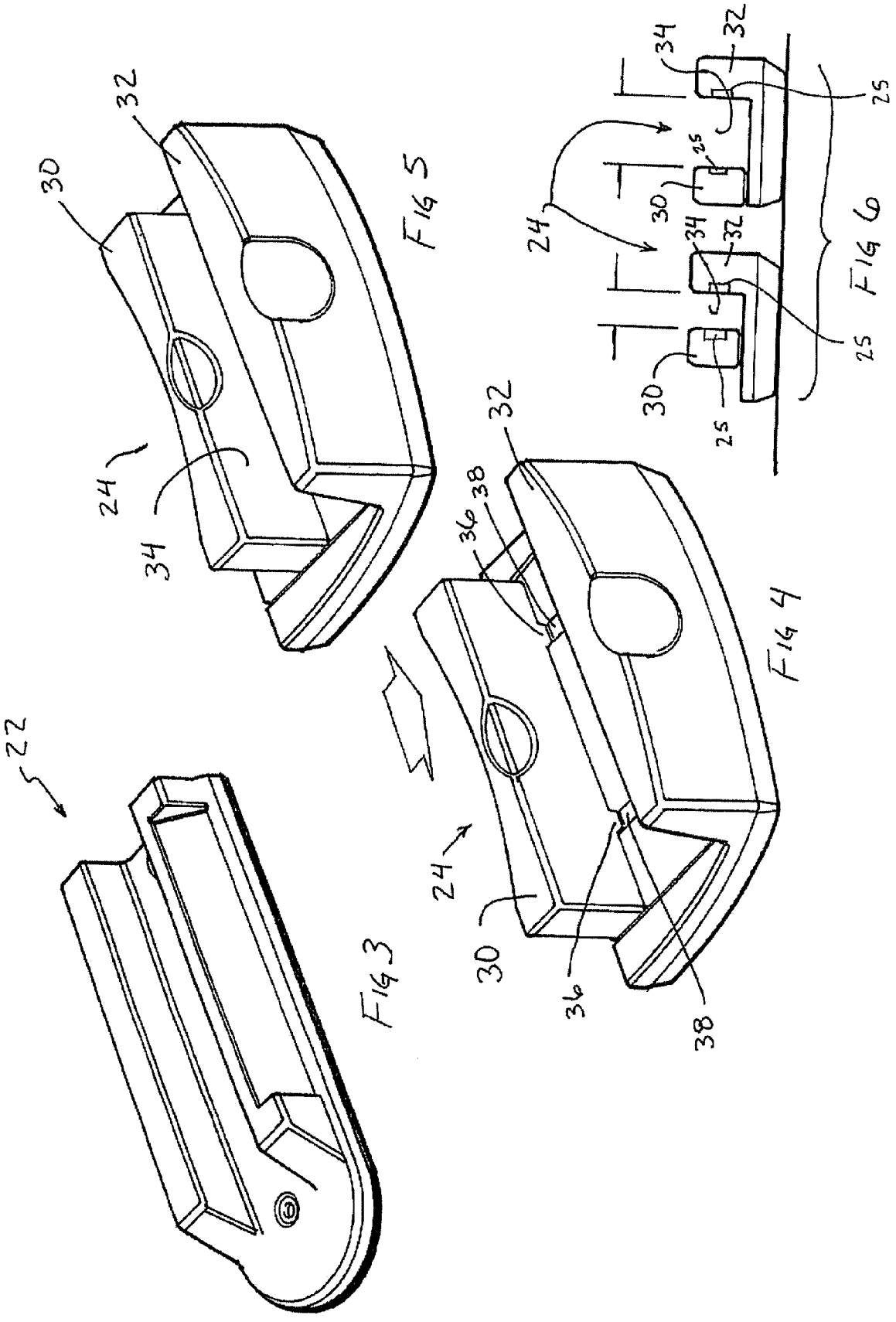

Fig 3

Fig 4

Fig 5

Fig 6

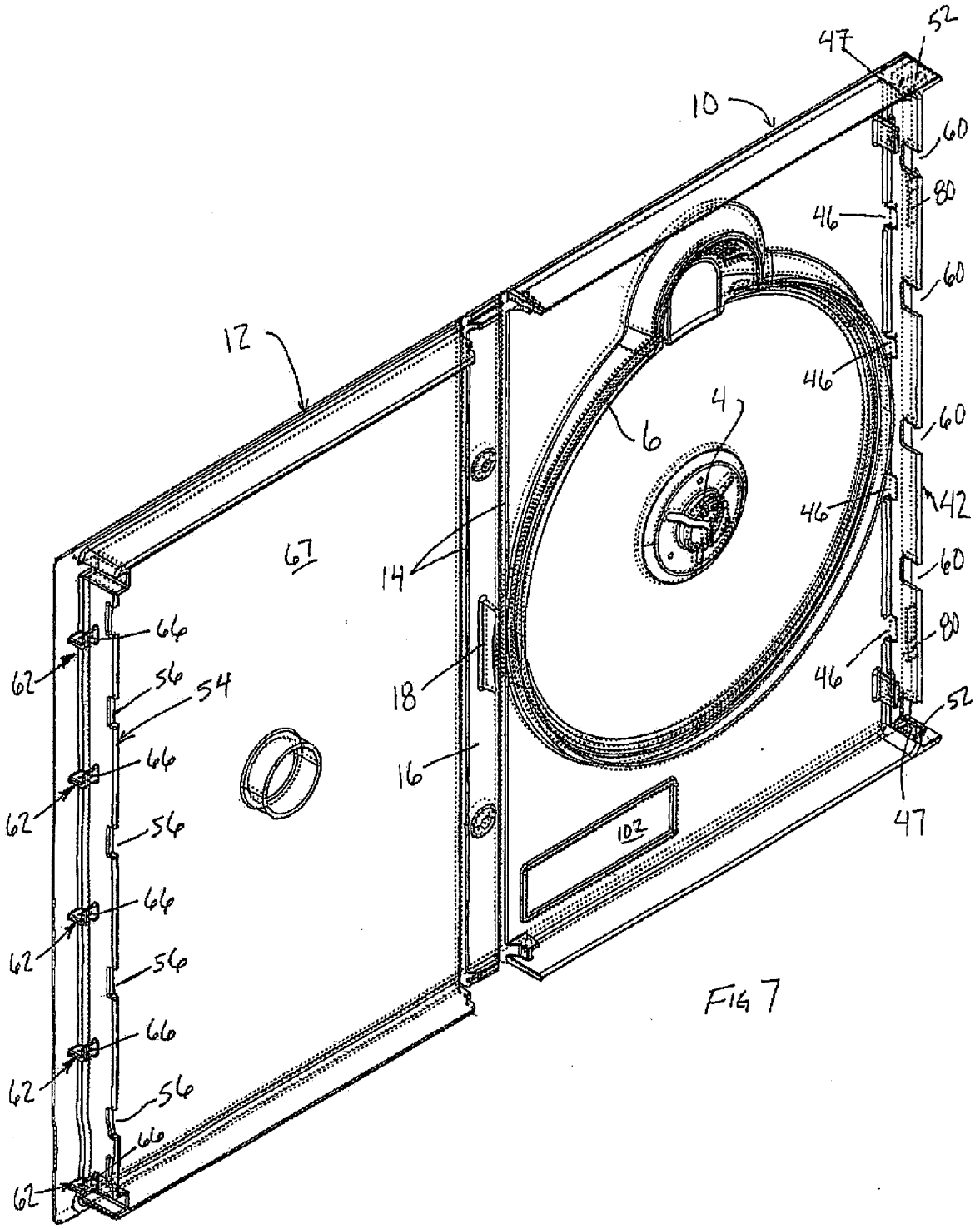

FIG 7

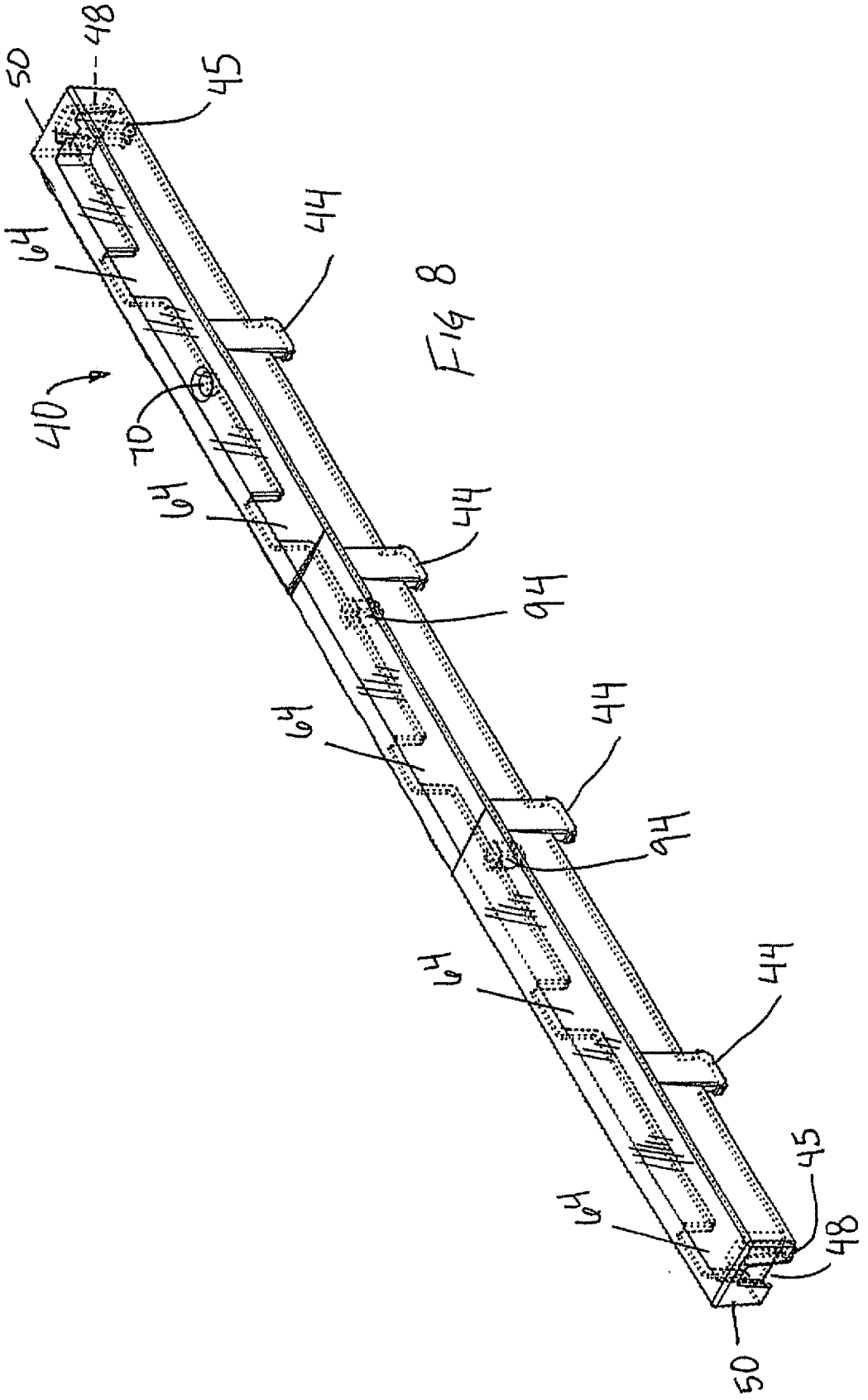

FIG 8

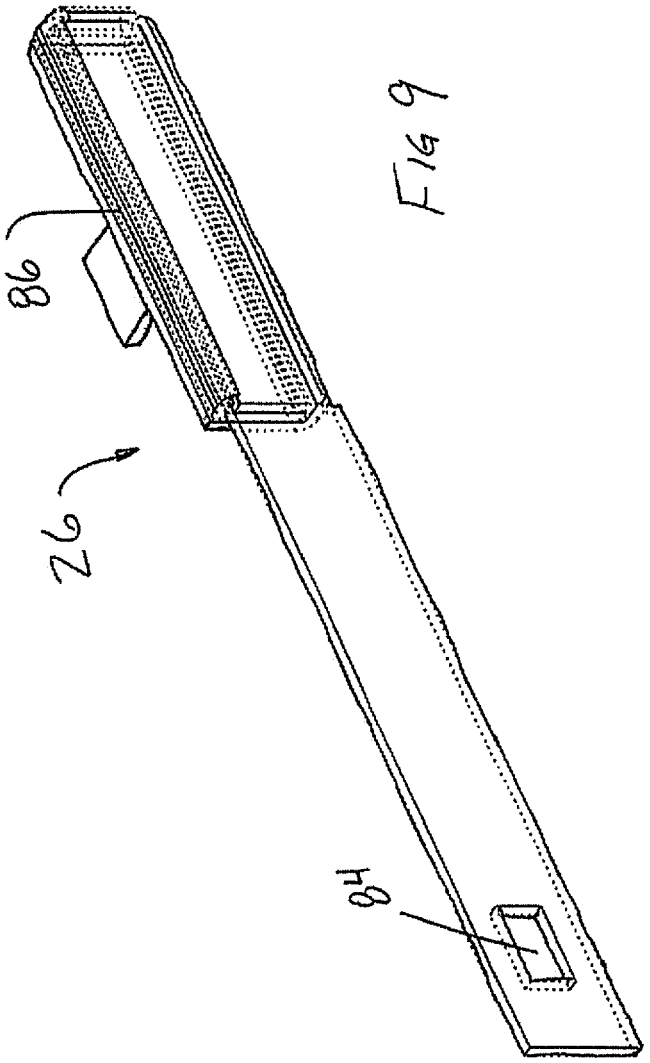

Fig 9

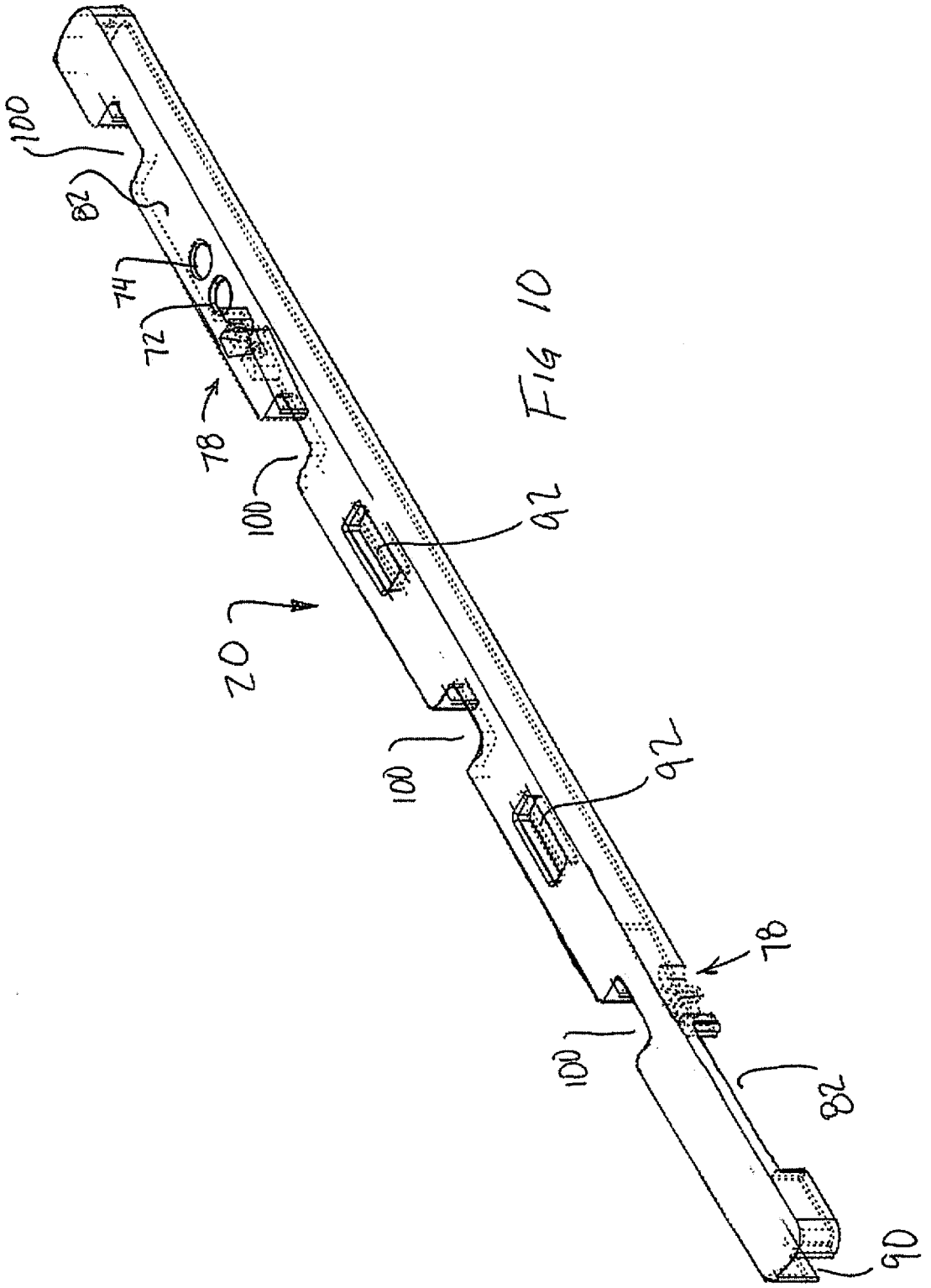

Fig 10

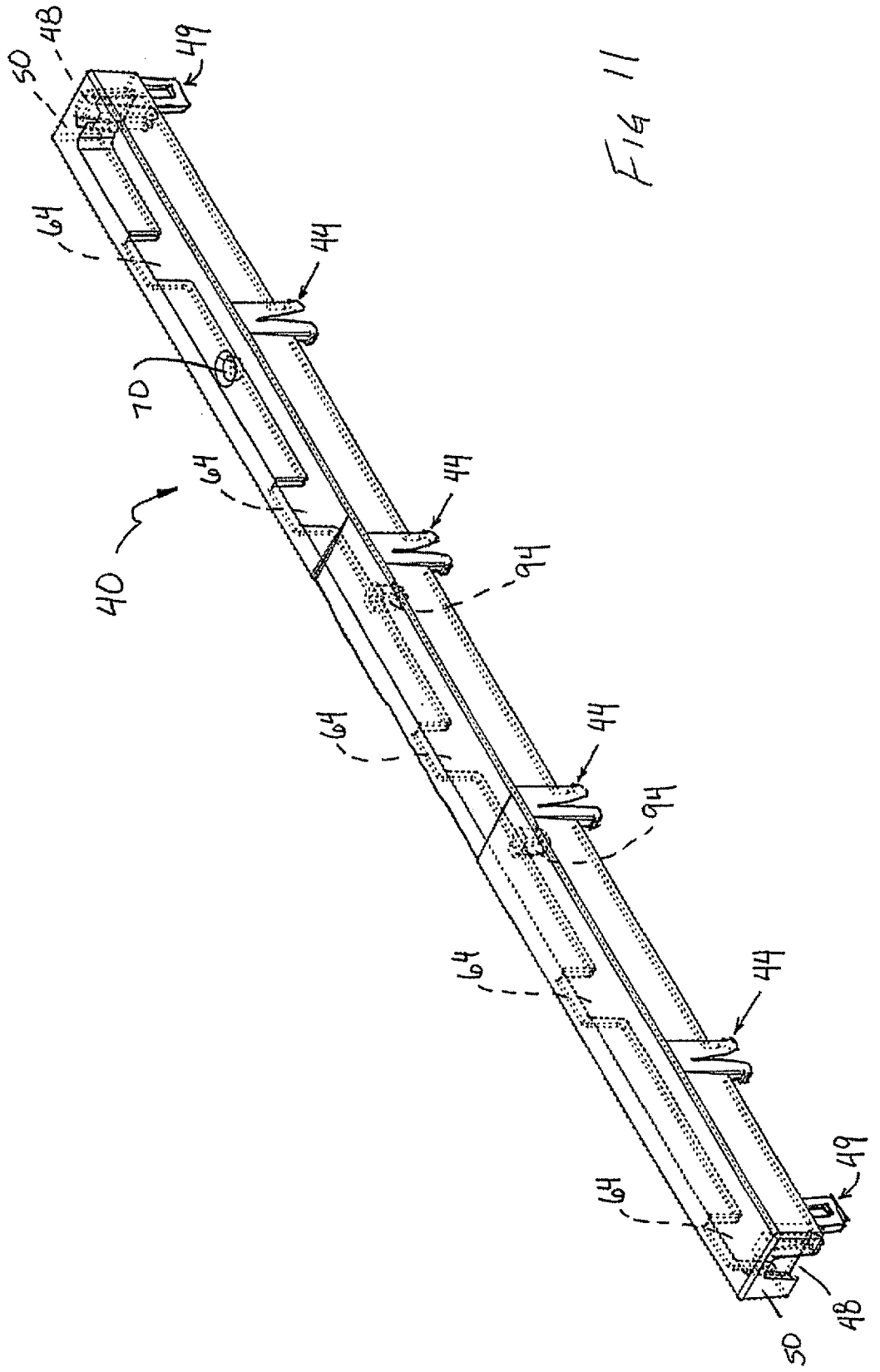

Fig 11

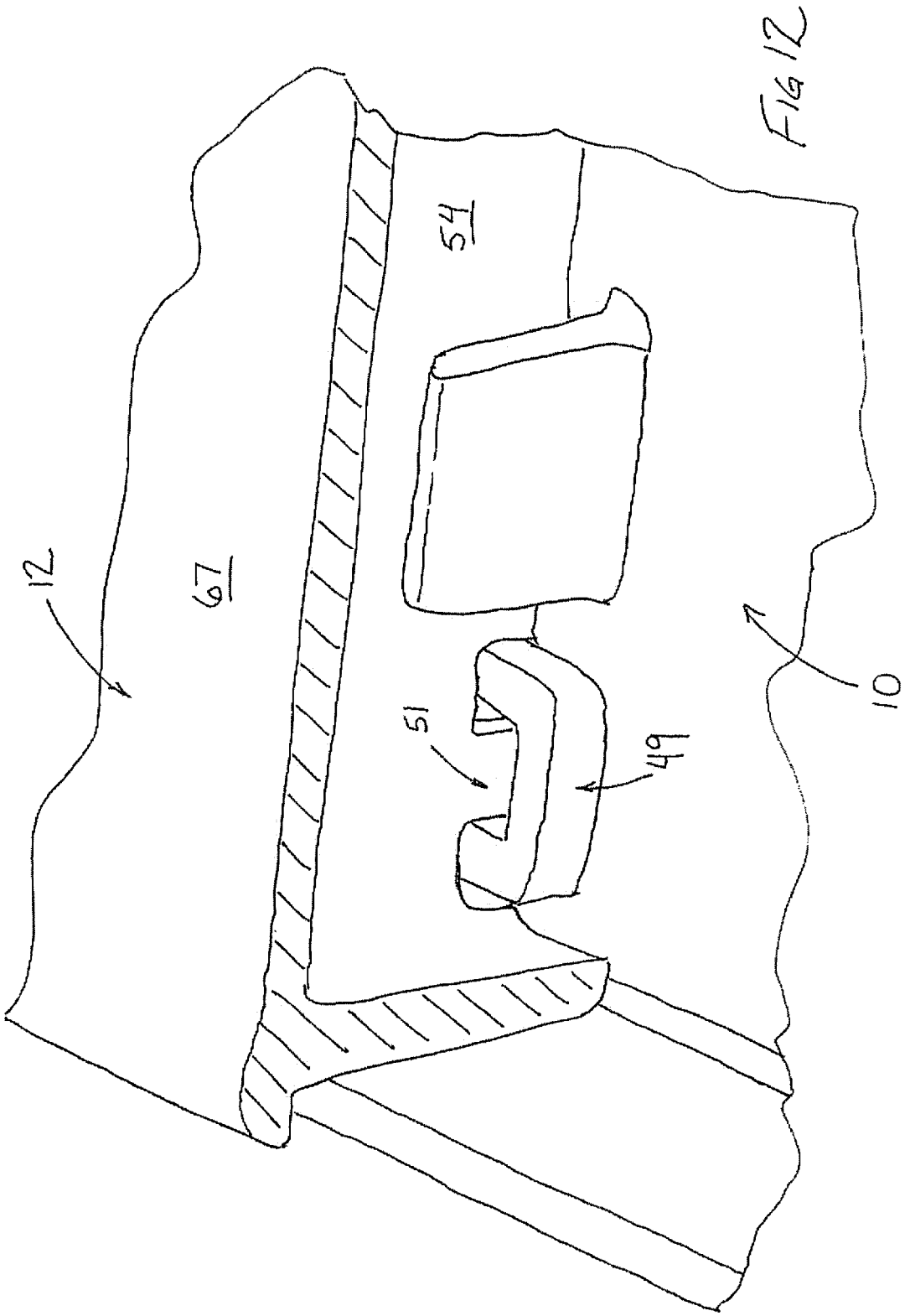

Fig 12

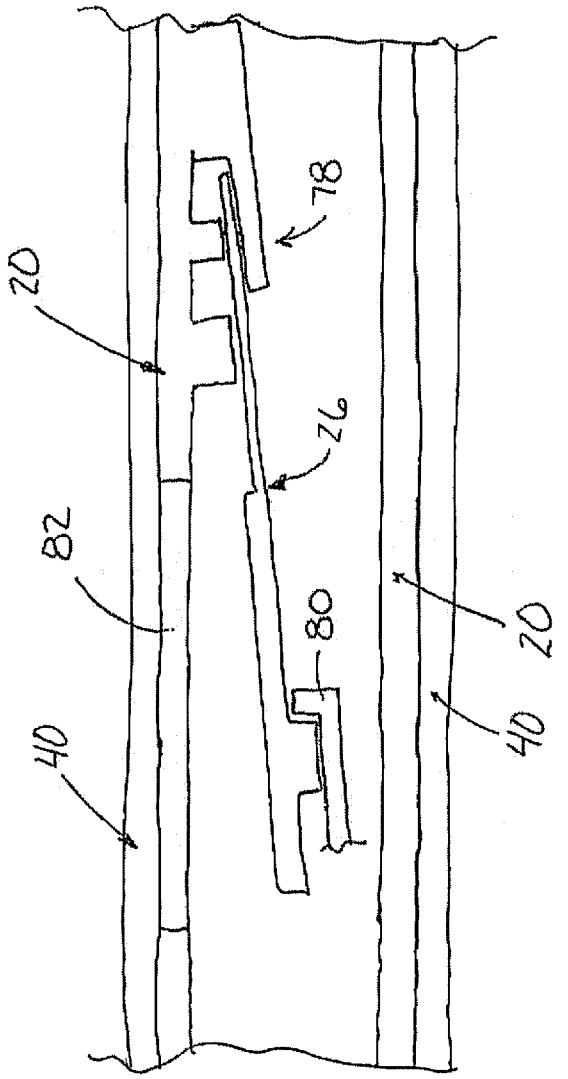

FIG 13

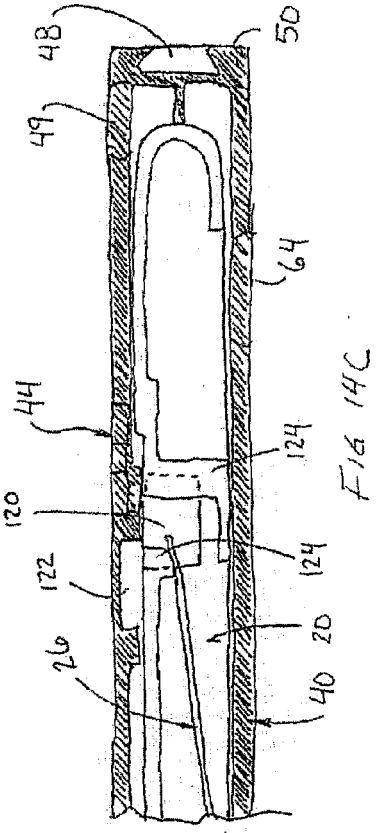

FIG 14C

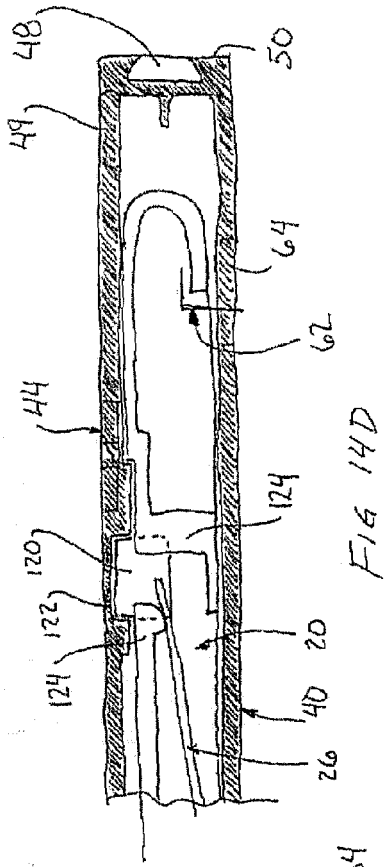

FIG 14D

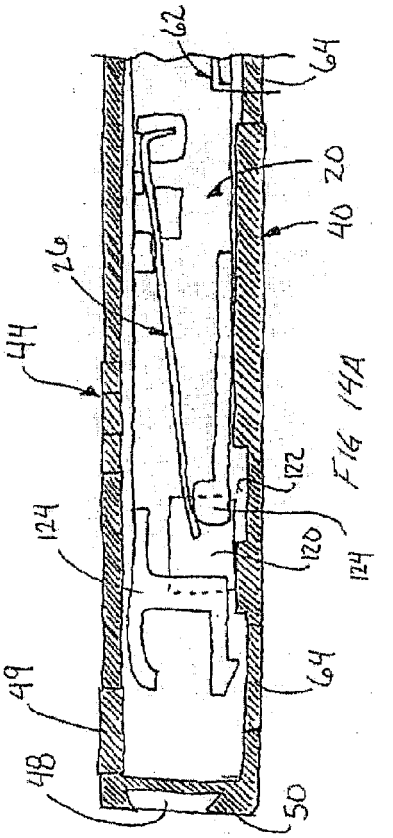

FIG 14A

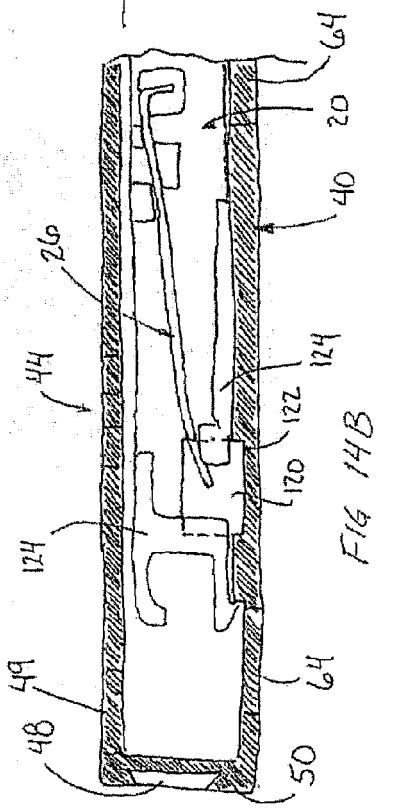

FIG 14B