(No Model.)

E. I. BLOUNT.

DOOR CHECK.

No. 406,621. Patented July 9, 1889.

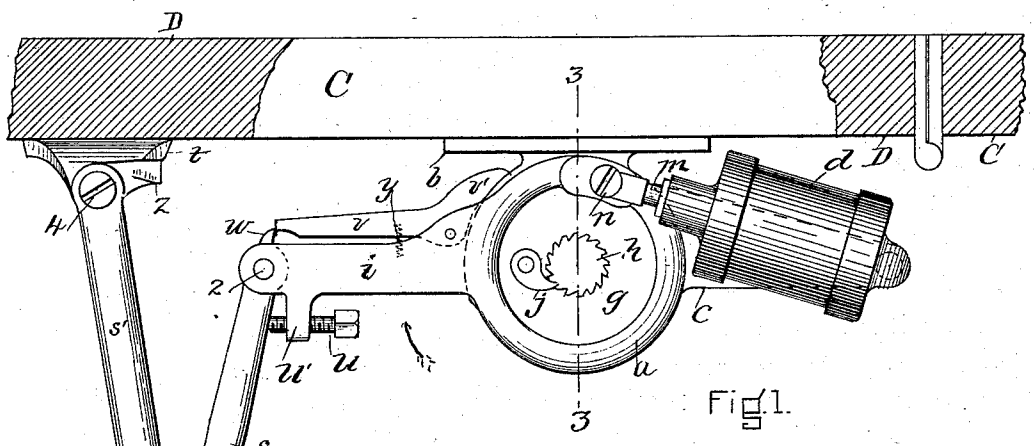

Fig. 1.

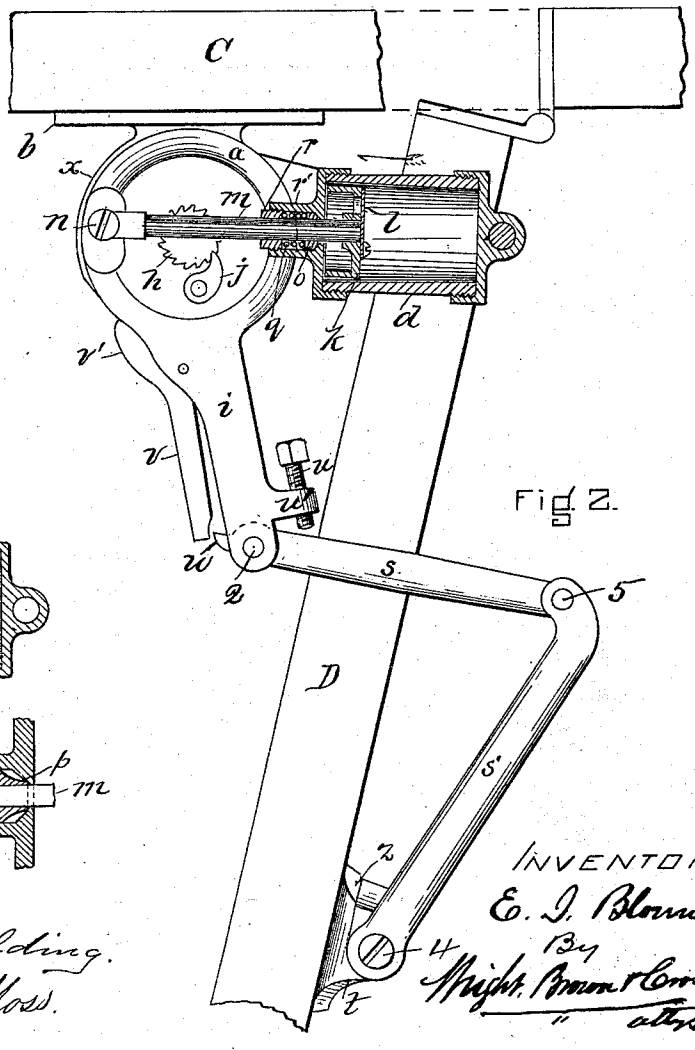

Fig. 2.

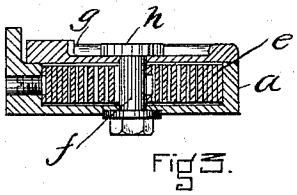

Fig. 3.

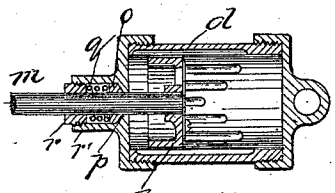

Fig. 4.

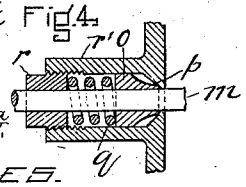

Fig. 4a.

WITNESSES.

Chas. Spaulding.

Charles E. Moss.

INVENTOR.

E. I. Blount.

By Wright, Brown & Crossley

Attys.

N. PETERS, Photo-Lithographer, Washington, D. C.

UNITED STATES PATENT OFFICE.

EUGENE I. BLOUNT, OF CAMBRIDGE, MASSACHUSETTS, ASSIGNOR TO THE BLOUNT MANUFACTURING COMPANY, OF PORTLAND, MAINE.

DOOR-CHECK.

SPECIFICATION forming part of Letters Patent No. 406,621, dated July 9, 1889.

Application filed December 7, 1888. Serial No. 292,912. (No model.)

To all whom it may concern:

Be it known that I, EUGENE I. BLOUNT, of Cambridge, in the county of Middlesex and State of Massachusetts, have invented certain new and useful Improvements in Door-Checks, of which the following is a specification.

It is the purpose of my invention to provide improvements upon the door-check shown and described in United States Letters Patent No. 289,380, granted to me December 4, 1883, said improvements securing greater simplicity of construction and entire certainty and efficiency of operation.

My invention will first be fully described in connection with the accompanying drawings, forming a part of this specification, and then pointed out in the claims hereto appended.

Of said drawings, Figure 1 is a plan view of the invention, shown as applied to a door and its casing, parts of the latter being pictured in section and the position of the parts being that which they will assume when the door is closed. Fig. 2 is likewise a plan view of the invention, partly in section, the parts being shown in the position they will assume when the door is opened to an extent that will bring it to a position nearly at right angles with its casing. Fig. 3 is a sectional view of the spring barrel or casing and its adjuncts, the view being taken on the line 3 3 of Fig. 1. Fig. 4 is a sectional detail view showing a modified form of cushioning cylinder or barrel. Fig. 4^a is an enlarged sectional detail view showing the form of packing employed.

The same letters designate the same parts in all of the figures.

In the drawings, *a* designates the spring barrel or casing, which is provided with a base-plate *b*, whereby it may be secured to the door-casing C over the door D, near the hinge-point of the latter. The spring barrel or casing *a* is also provided with a bracket or extension-piece *c*, upon which the rear end of the cylinder *d* is pivoted, so that it can oscillate, as hereinafter explained. The barrel *a*, base-plate *b*, and bracket *c* may be integrally connected or otherwise constructed, as may be most convenient or suitable.

e designates a spring coiled in the barrel *a*, and having its outer end secured to said barrel and its inner end attached to the arbor *f*, on the upper end of which arbor, outside of the cap *g*, is integrally connected or rigidly secured a ratchet-wheel *h*.

i designates an arm, here shown as forming an integral part of the cap *g*, though it might be made separate therefrom and be rigidly secured thereto. Upon the cap *g* is pivoted a pawl *j*, constructed and arranged to engage the teeth of ratchet-wheel *h*.

The lower end of arbor *f* is reduced in diameter and screw-threaded to receive a nut, which, when turned "home," holds the cap *g* down on the barrel *a*, and after the nut is turned home or against the shoulder formed by reducing the diameter of the arbor by further turning said nut the arbor will also be turned, thus winding up the spring in the casing, causing said spring, when the pawl *j* is engaged with the teeth of the ratchet-wheel *h*, to exert force on arm *i* through the medium of the connecting parts, so as to move said arm in the direction of the arrow, Fig. 1. Any other suitable means may, however, be provided for winding up the spring.

k designates the piston, constructed and arranged to operate in the cylinder *d*, which latter device is designed to contain glycerine or other suitable liquid. The piston *k* is provided with a check-valve *l*, which opens as the piston is moved forward or in the direction of the arrow, Fig. 2, and closes when the piston is moved in the opposite direction.

m designates the piston-rod, fulcrumed or pivoted at its outer end, as at *n*, on the periphery of the cap *g*, and "packed" at the point where it passes through the head of the cylinder by means of a thimble or collar *o* of suitable soft metal, having a narrow bearing at its inner end on the inclined seat *p* of the cylinder-head, and held pressed down to its seat by means of a spring *q*, operating at one end against said packing-thimble and at the other against the plug *r*, screwed into the outer end of the packing-box *r'*. With this construction an efficient packing may be secured between the piston-rod and cylinder-head, and as the packing-thimble *o* becomes worn the spring *q* will press it inward, so as to take up such wear.

It may here be explained that when the door is opened the parts will be moved from the position in which they are represented in Fig. 1 to that in which they are shown in Fig. 2, the piston *k* moving in the direction of the arrow, Fig. 2, from the rear end of the cylinder *d* to the forward end, and, as it is desirable that the liquid in the cylinder shall in this movement of the door offer but slight resistance to the described movement of the piston, the check-valve *l* is provided, which opens to permit the free flow of the liquid from in front of the piston *k* to the rear thereof. When the door is moved toward closed position, which movement is accomplished by the action of spring *e*, it is designed that the liquid in the cylinder *d*, resisting the movement of piston *k* in a direction opposite to the flight of the arrow, Fig. 2, will likewise resist such closing movement of the door, and hence the check-valve *l* is constructed and arranged to close as the piston moves rearward, the only escape for the liquid in the cylinder from the rear to the front of the cylinder being the means afforded by the space between the periphery of the piston and the cylinder, and in order that this resistance may be gradually increased as the door moves from full-open to closed position, so that it will move forward rapidly at first and gradually "slow up" as it approaches the last-mentioned position, I graduate the extent of space between the periphery of the piston and the cylinder from front to rear. This may be done by giving the interior of the cylinder a tapering form, as shown in Fig. 2, or by forming grooves of varying length on the interior of the cylinder, as shown in Fig. 4. By this means as the piston *k* moves from the front to the rear end of the cylinder the resistance offered to such movement by the liquid in the cylinder will gradually increase by reason of the diminishing means for the escape of the liquid from the rear to the front of the piston, thus insuring the closing of the door with a "slowing-up" movement.

It is manifest that the interior of the cylinder need not be tapering throughout, as in some instances it might be as well, or even better, that it should be of equal diameter for a portion of its length and tapering for the remainder of its length, and in practice some cylinders are constructed by me in this manner.

The arm *i* is connected with the door D by means of the toggle-jointed levers *s s'*, the former being pivoted at one of its ends, as at 2, to the forward end of arm *i*, and the latter pivoted by one of its ends, as at 4, to a lug or bracket *t*, secured to the door D, the other ends of said levers being pivotally connected, as at 5, as shown. As the axis of movement of the arm *i* is not coincident with that of the movement of the door, it follows that the pivotal point 4, at which arm *i* is through intermediate devices connected with the door, will move on a line eccentric to the arbor or stud *f*, and one reason for the employment of the toggle-jointed levers *s s'* for connecting arm *i* with the door is to compensate for this movement of the connecting pivotal point 4 away from and toward the axis of movement of arm *i*.

In order that in opening and closing the door the toggle-jointed levers *s s'* may not simply move on their pivotal points 2 4 5, but move and be moved by spring-actuated arm *i*, said arm and lever *s* are constructed and arranged to have a practically-rigid connection at the pivotal point 2 during the time that the door is being moved from closed position to a position substantially at right angles to its casing, as also from its last-mentioned position to closed position, during which time arm *i* and lever *s* will operate practically as one lever or arm.

To accomplish the foregoing end, a set-screw *u* is arranged and adjusted in a lug *u'* of arm *i*, so that when the door is closed the forward end of said set-screw will barely touch or rest against lever *s*, as shown in Fig. 1, and a lever *v* is pivoted upon arm *i* or to the barrel or casing *a* in such position that its forward end will just reach the rearward face of a finger *w*, projecting from lever *s*, as also represented in Fig. 1.

With this construction and arrangement of parts, as the door D is opened arm *i* and its connected cap *g* will be moved so as to draw the piston *k* from the rear to the front end of the cylinder, the parts moving from the position in which they are represented in Fig. 1 to that in which they are portrayed in Fig. 2. By pivoting the rear end of the cylinder to its supporting-bracket *c*, as described, the draft on the piston-rod *m* is maintained at all times in a direct or right line.

In order to prevent levers *s s'* from "buckling" at pivot-point 5, I provide a construction whereby lever *s'* may be held in a rigid manner and break the rigid nature of the connection of lever *s* with arm *i*, and this latter result is accomplished by causing the forward end of lever *v* to move out of contact with finger *w* of lever *s*. The rear end of lever *v* is constructed as a shoe *v'*, adapted to move in contact with the periphery of barrel *a*, upon which is formed a cam *x*, a spring *y*, interposed between the forward portion of lever *v* and arm *i*, serving to keep the shoe *v'* in contact with the periphery of the barrel. So long as the shoe *v'* is on the cam *x* the forward end of lever *v* will be maintained in position against the face of finger *w*; but as arm *i* and lever *v* are moved around, so as to bring the shoe *v'* off from cam *x*, spring *y* will operate to move lever *v* from contact with finger *w*, permitting lever *s* to turn on its pivotal connection 2 with arm *i*, as is clearly shown in Fig. 2.

In order to hold lever *s'* in a rigid manner, so as to avoid buckling of levers *s s'* after the door shall have been partially opened, as before mentioned, I provide bracket *t* with a

stop *z*, so arranged that lever *s'* will at the proper time come in contact with said stop, and the further movement of said lever *s'* on its pivot 4 in the opening of the door be thus prevented. The instant the door is released the stress of spring *e* will operate to draw it in the direction of the arrow, Fig. 1, carrying arm *i* around in the same direction, causing shoe *v'* to ride up on cam *x*, and, carrying the forward end of lever *v* against the face of finger *w*, re-establishing the nature of the rigid connection between the lever *s* and arm *i*.

The operation of the invention has been so fully explained in setting forth its nature and purposes as to make further description thereof unnecessary.

With the herein described improvements my patented door-check before mentioned is greatly simplified in structure, and is rendered entirely certain and efficient in its operations.

It is obvious that changes may be made in the form and arrangement of parts comprising my improvements without departing from their nature or spirit.

Having thus described my invention, I declare that what I claim is—

1. In a door-check, the spring-actuated cap *g* and its connected arm, combined with a pivoted cylinder, and a piston and piston-rod, said piston-rod being pivoted at its outer end upon the periphery of said cap, substantially as set forth.

2. The spring barrel or casing, spring, and arbor, said spring being secured at one end to said barrel and at the other end to said arbor, combined with a rotary cap and connected arm, a ratchet-wheel on said arbor, a pawl pivoted on said cap and engaging said ratchet-wheel, a pivoted cylinder, and a piston-rod and piston, said piston-rod being pivoted at its outer end on the periphery of said cap, substantially as set forth.

3. The spring barrel or casing provided on its periphery with a cam, combined with the spring-actuated arm, the door, toggle-levers connecting said arm with the door, a lever *v*, pivoted upon said arm and provided at one end with a shoe adapted to operate on the periphery of the barrel and be actuated by said cam, the other end of said lever *v* engaging a projecting finger of one of said toggle-levers, and a set-screw or stop connected with said arm on the side of the fulcrum of said lever opposite that of the aforesaid projecting finger, substantially as set forth.

4. The spring barrel or casing provided on its periphery with a cam, combined with a spring-actuated arm, the door, a lug or bracket on the door, toggle-levers *s s'*, connecting said arm with the door, a lever *v*, pivoted upon said arm and provided at one end with a shoe adapted to operate on the periphery of the barrel and be actuated by said cam, the other end of said lever *v* engaging a projecting finger of toggle-lever *s*, a set-screw or stop connected with said arm on the side of the fulcrum opposite that of the aforesaid finger, and said toggle-lever *s'* being constructed and arranged to engage the stop of the lug or bracket on the door, substantially as set forth.

5. In a door-check, the spring casing or support provided with a base-plate and its connected bracket *c*, and the spring-actuated cap *g* and its connected arm, combined with a cylinder pivoted on said bracket, and a piston and piston-rod, said piston-rod being pivoted at its outer end upon the periphery of said cap, substantially as set forth.

In testimony whereof I have signed my name to this specification, in the presence of two subscribing witnesses, this 1st day of December, A. D. 1888.

EUGENE I. BLOUNT.

Witnesses:
ARTHUR W. CROSSLEY,
W. C. RAMSAY.