(12) UK Patent Application (19) GB (11) 2 152 255 A

(43) Application published 31 Jul 1985

(21) Application No 8334616

(22) Date of filing 30 Dec 1983

(51) INT CL⁴
G05D 23/19

(52) Domestic classification
G4H 13D 14A 14D 1A NB
G3N 262 383A 404 G1A
G3R A32 A34 A623 B4724 B485 BQ46
U1S 1967 1976 1978 2185 G3N G3R G4H

(71) Applicant
Alexander Electronics Limited (United Kingdom),
Edward Street, Cambridge Industrial Estate, Salford,
Greater Manchester

(72) Inventors
Graham Harold Hall
Eric Simpson

(74) Agent and/or Address for Service
McNeight & Lawrence,
Regent House, Heaton Lane, Stockport, Cheshire
SK4 1BS

(56) Documents cited

GB A 2050662	GB 1601566	EP A2 0091715
GB A 2039402	GB 1520647	EP A1 0069470
GB A 2031200	GB 1338375	EP A2 0067011
GB A 2027961	GB 1304536	EP A1 0051325

(58) Field of search
G4H

(54) Control arrangement for central heating or cooling system

(57) A control system for a central heating or cooling system includes a microprocessor 30 adapted to send coded signals along a single electrical conductor 31 to actuate electrically operable devices such as zone control valves remotely (via 13a, 14a, 17a). Temperature sensing means 40 report to the microprocessor periodically.

The microprocessor can be programmed with start times, stop times and temperatures for each zone.

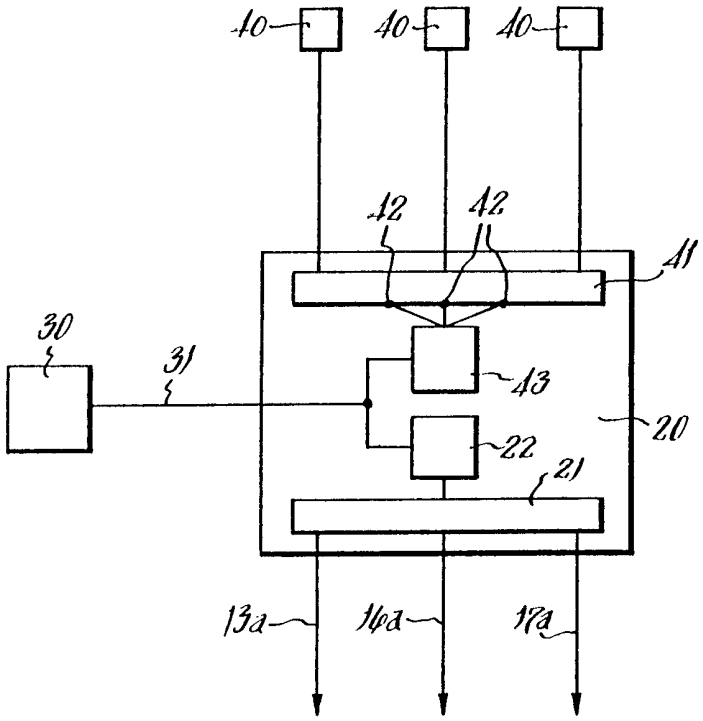

FIG. 2

GB 2 152 255 A

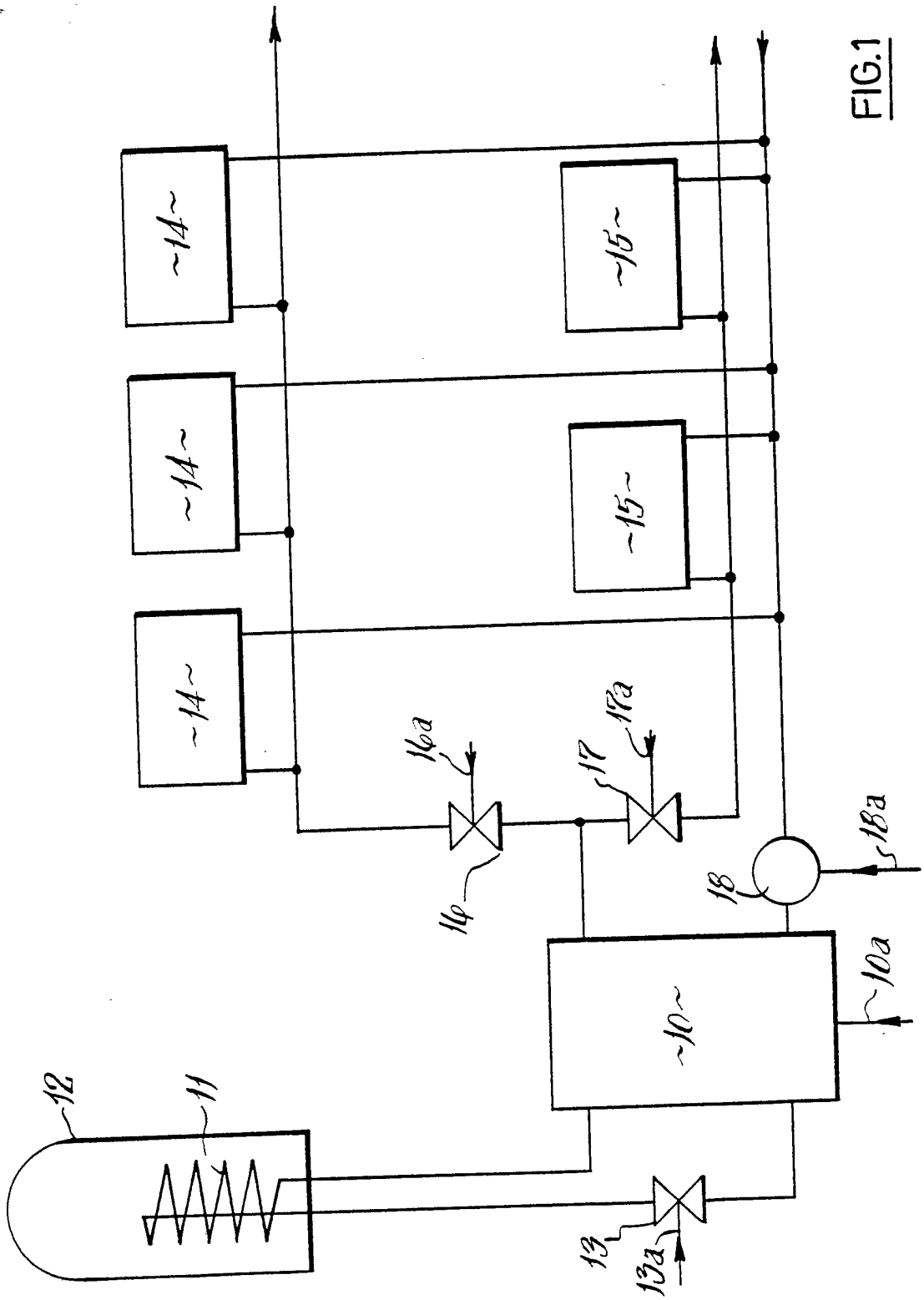

FIG.1

FIG.2

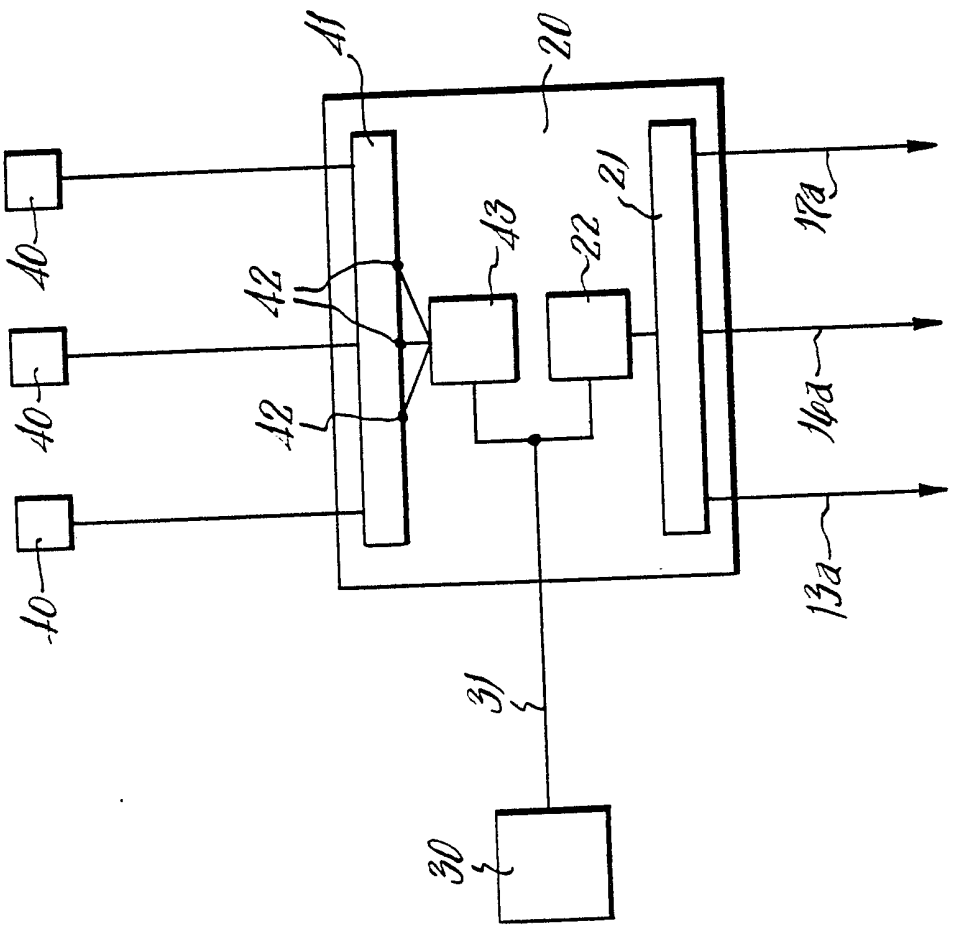

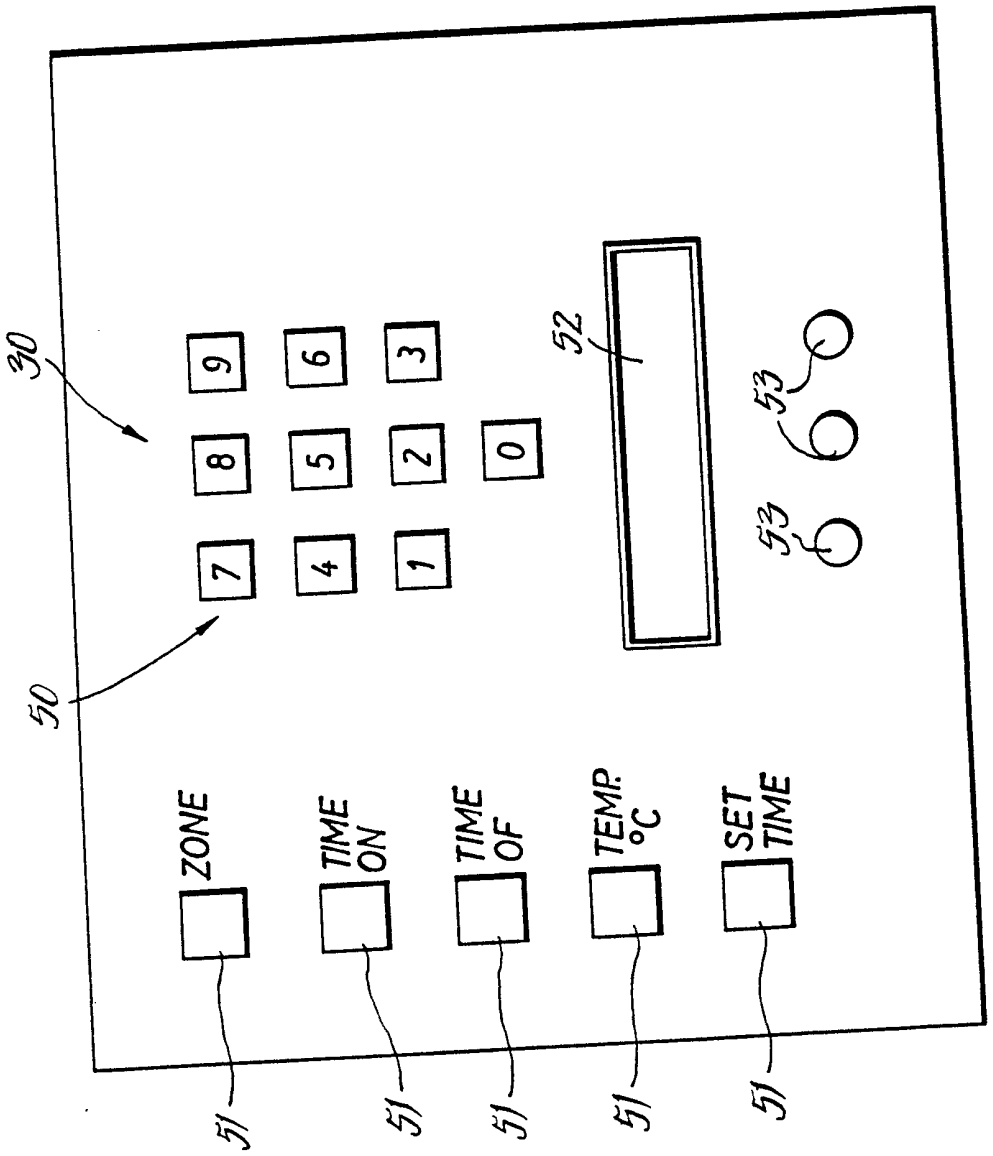
30
50
9
8
7
6
5
4
3
2
1
0
52
53
53
ZONE
TIME ON
TIME OF
TEMP. °C
SET TIME
51
51
51
51
51

FIG.3

SPECIFICATION

Control arrangement for central heating or cooling system

This invention concerns a control arrangement for a central heating or cooling system which may be domestic, commercial or industrial and of the kind (hereinafter termed "of the kind referred to") including at least one electrically operable component.

A typical system of the kind referred to comprises a domestic central heating system having an oil or gas-fired boiler adapted to supply heated water to three zones. The first and second zones each comprise a plurality of central heating radiators located on the ground floor and first floor of the house respectively whilst the third zone comprises the primary heating coil for a cylinder for domestic hot water supply. Each zone is connectable to receive heated water from the boiler by means of a motor driven zone control valve. A pump is provided for the forced circulation of heated water through the first and second zones whilst water circulation through the third zone is gravity dependent.

A typical control arangement for such a domestic central heating system will include an enabling time clock and temperature sensing means for each zone. When the time clock and temperature sensing means for any zone both call for heat the boiler is fired, the zone control valve opened and, if appropriate, the pump operated. The boiler is equipped with a thermostat to cause it to cut out should the water in the system exceed a safe operating temperature of say 82°C or thereabouts.

The use of microprocessors for the control of central heating systems is becoming increasingly popular, as they easily allow a user to enable each zone for as many chosen periods in the day as he wishes and to select different periods for different days of the week. Also the microprocessor may be fed with temperature data from each zone for comparison with stored data enabling the user to determine the required temperatures in each zone which can be varied from chosen period to chosen period.

In the domestic environment it is usual for the microprocessor to be located at a convenient position in the living room or kitchen enabling easy access for adjustment of times and temperatures. Such position will usually be remote from the boiler and the other electrically operated components of the system.

Hitherto it has been necessary to connect the microprocessor with circuitry in the vicinity of the boiler with a multi-core cable because of the numerous components to be monitored and controlled. This has had a number of disadvantages including cost and, most importantly, consumer resistance.

It is an object of the invention to provide a control arrangement for a central heating system of the kind referred to and which overcomes the disadvantages aforesaid.

According to the present invention there is provided a control arrangement for a central heating or cooling system of the kind referred to comprising a microprocessor or the like adapted to be located at a position remote from switch means for actuation of said electrically operable components and an electrical conductor extending from the microprocessor or the like to carry coded signals therefrom to decoding means adapted to operate said switch means as required by the microprocessor.

Preferably the control arrangement includes at least one temperature sensing device adapted to report to the microprocessor through said conductor at predetermined periods of time.

It will be understood that the microprocessor of the control arrangement could readily be installed in place of a conventional room thermostat and use existing cabling to the boiler house. Usually there will be a three core cable which will thus enable a power supply and provide the electrical conductor for data transmission.

The invention will be further apparent from the following description, with reference to the several figures of the accompanying drawings, which show, by way of example only, one form of control arrangement for a typical domestic central heating system embodying the invention.

Of the drawings:—

Figure 1 is a diagrammatic representation of the major components of the central heating system;

Figure 2 is a block circuit diagram of the control arrangement; and

Figure 3 is a plan view of the control panel to the microprocessor of the arrangement.

Figs. 1 and 2 generally show line wiring only and omit earth and return wiring in the interests of clarity.

Referring now to Fig. 1, it will be seen that the central heating system includes an oil or gas-fired boiler 10 which will fire whenever enabled by application of mains voltage on line 10*a* as long as water temperature is below a predetermined safety level of say 82°C set on a cut-out boiler thermostat (not shown). The boiler 10 can, under the influence of gravity, circulate heated water through a coil 11 to heat water for the domestic hot water supply contained within a cylinder 12 provided the zone control valve 13 is held open by application of mains volatage to

line 13*a*.

The boiler 10 can also supply heated water to an upstairs heating circuit comprising space heating radiators 14 and/or a downstairs heating circuit comprising space heating radiators 15 when zone control valves 16 and/or 17 are opened respectively by application of mains voltage to lines 16*a* and 17*a* respectively. Circulation of heated water through the upstairs and/or downstairs heating circuit is assisted by a pump 18 which is operated whenever mains voltage is applied on line 18*a*.

Turning now to Fig. 2 it will be seen that a control box 20 is provided which includes solid state switch means 21 adapted to apply or remove mains voltage to selected ones of lines 13*a*, 16*a* and 17*a* under the control of decoding circuitry 22 which receives coded pulses from a microprocessor 30 through line 31.

Transistorised temperature sensing devices 40 are provided for each zone. Two of the devices sense air temperature in desired positions in a downstairs and upstairs room of the house respectively, whilst the third is secured to the wall of the cylinder 12 to sense the temperature of the water therein. The devices 40 are connected to circuitry 41 adapted to give a digital output representative of the sensed temperatures to three ports 42 which can be interrogated in turn by the microprocssor 30 using again the line 31 and further decoding circuitry 43.

The microprocessor 30 will generally be located remote from the boiler house and control box 20 and be connected therewith by a cable containing three cores at most. Two cores are used as a power supply and the third comprises line 31 previously referred to. When the control arrangement is fitted to an existing central heating system, the microprocessor 30 may be conveniently installed at the site of a redundant room thermostat and utilise the existing cabling to the boiler house.

The microprocessor 30 is provided with both RAM and ROM in known manner and a battery reserve to ensure that stored data in RAM is not lost through temporary interruption of power supply.

The control panel of the microprocessor 30 is shown in Fig. 3 and includes a numeric keypad 50, five function buttons 51, an LCD display 52 and a number of LED indicators 53.

In use the user first presses the "set time" button and keys in current time. He then presses the "zone" button and keys in the identifying number of the first zone to be programmed. Next the "time on", "time off" and "temperature" buttons are pressed in turn and the start time, stop time and required temperature for the selected period keyed in. This process might be repeated to provide a plurality of such periods, some of which may commence and terminate simultaneously throughout the twenty-four hour day. The remaining zones are then programmed in similar manner.

All keyed in values are stored at predetermined addresses in RAM.

A typical programme might be as follows:—

Zone 1—Downstairs Heating

On 6.30	Off 23.00	Temp 20°C
On 23.00	Off 6.30	Temp 10°C

Zone 2—Upstairs Heating

On 22.00	Off 24.00	Temp 20°C
On 6.00	Off 8.30	Temp 20°C

Zone 3—Domestic Hot Water

On 6.30	Off 10.00	Temp 60°C
On 16.00	Off 23.00	Temp 60°C

The ROM of the microprocessor contains software to cause the microprocessor to perform the following operations:—

1. During each period of one second to send coded pulses through line 31 to actuate circuitry 43 to access ports 42 in turn to receive through line 31 temperature data from each of the three zones.
2. To compare the received data with the required data stored in RAM.
3. Whenever the programmed time settings and sensed temperature for each zone both call for heat to send a coded signal through line 31 to actuate circuitry 22 to operate switch means 21 to open at the associated zone control valve.
4. Whenever either the programmed time settings or the sensed temperature for each zone calls for no heat to send a coded signal through line 31 to actuate circuitry 22 to operate switch means 21 to close the associated zone control valve.

The zone control valves 13, 15 and 17 include switch means adapted and arranged to apply

mains voltage to line 10*a* to fire the boiler 10 whenever any one of them is open and also to apply mains voltage to line 18*a* to operate pump 18 whenever either valve 16 or valve 17 is open.

The LED indicators 53 can be illuminated to show which parts of the system are operating at any time, whilst the LCD display 52 can be used to allow the user to examine any of the preset values of time and temperature by actuation of the appropriate function buttons 51.

It will be appreciated that it is not intended to limit the invention to the above example only, many variations, such as might readily occur to one skilled in the art, being possible, without departing from the scope thereof.

Thus, for example, the microprocessor may use coded tones or other signals instead of the coded pulse signals referred to, and may have a more extensive user programming facility enabling different timings for different days of the week, for example.

Additional buttons may be provided on the control panel to set any zone to permanently on or permanently off conditions.

All systems should have overriding controls to call for heat in frost conditions.

CLAIMS

1. A control arrangement for a central heating or cooling system of the kind referred to comprising a microprocessor or the like adapted to be located at a position remote from switch means for actuation of the or each said electrically operable components and an electrical conductor extending from the microprocessor or the like to carry coded signals therefrom to decoding means adapted to operate said switch means as required by the microprocessor.

2. A control arrangement according to claim 1, including at least one temperature sensing device adapted to report to the microprocessor through said conductor at predetermined periods of time.

3. A control arrangement according to claim 2 wherein the heating or cooling system comprises at least one zone having a zone control valve, such valve comprising or being included amongst said electrically operable cevices, there being one temperature sensing device associated with each said zone control valve.

4. A control arrangement according to claim 3, wherein said microprocessor is equipped with communication means enabling a user to programme desired operational periods and temperatures for each said zone.

5. A control arrangement according to any preceding claim wherein said microprocesor is equipped with both ROM and RAM facilities.

6. A control arrangement according to claim 5, wherein battery means is available to preserve RAM in the event of power failure.

7. A control arrangement according to any one of claims 3–6, wherein there are a plurality of zones.

8. A control arrangement according to claim 7 wherein said system is a domestic central heating system having a zone for hot water supply and at least one zone for space heating purposes.

Printed in the United Kingdom for Her Majesty's Stationery Office, Dd 8818935, 1985, 4235.
Published at The Patent Office, 25 Southampton Buildings, London, WC2A 1AY, from which copies may be obtained.