Jan. 3, 1933. S. COHN 1,893,197

METHOD OF AND APPARATUS FOR TREATING TUBULAR TEXTILE FABRICS

Filed May 31, 1930

Fig. 1.

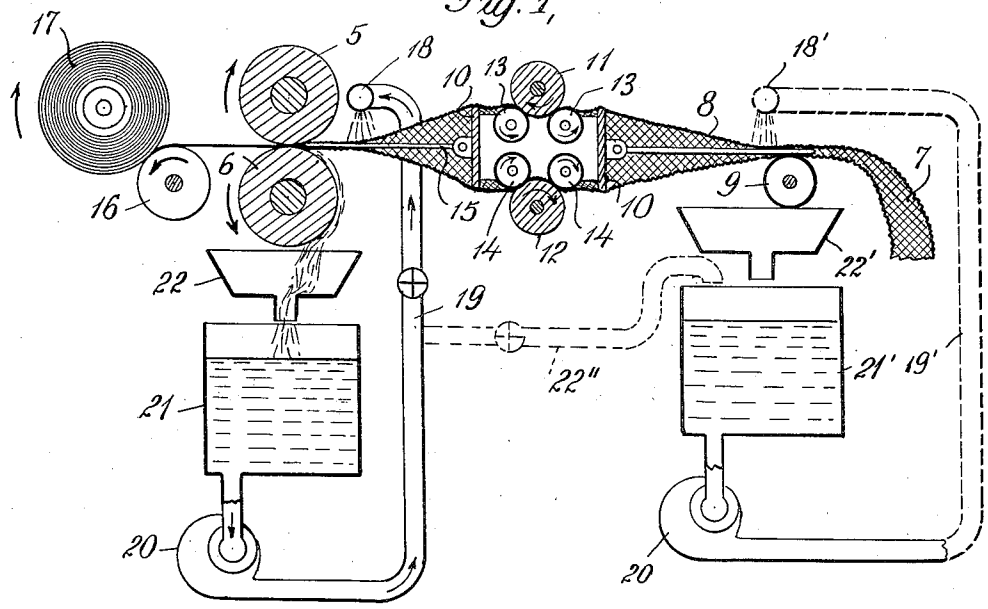

Fig. 2.

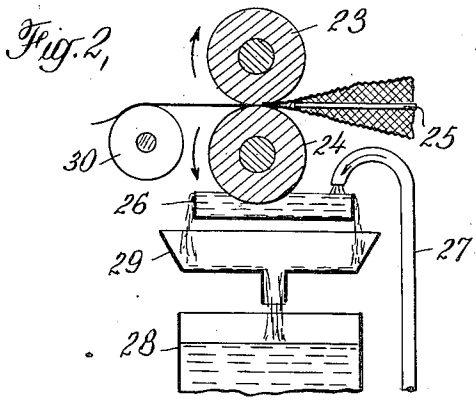

Fig. 3.

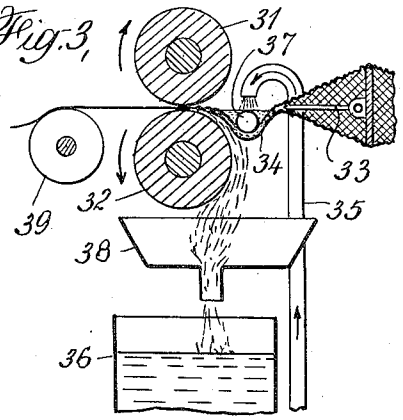

Fig. 4.

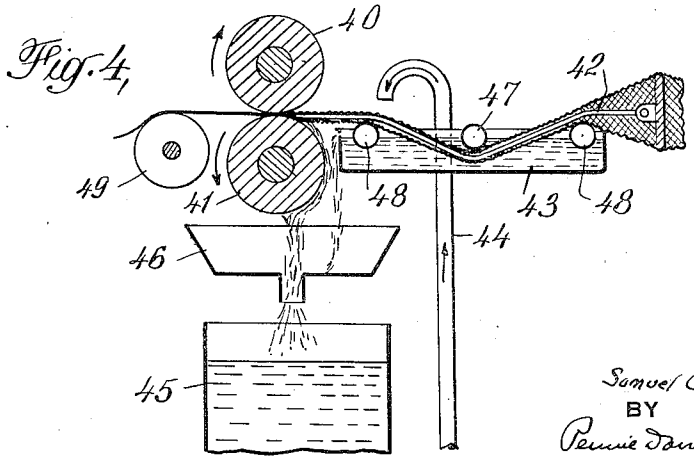

INVENTOR
Samuel Cohn
BY
Pennie Davis Marvin & Edmonds
ATTORNEYS

Patented Jan. 3, 1933 1,893,197

UNITED STATES PATENT OFFICE

SAMUEL COHN, OF NEW YORK, N. Y., ASSIGNOR TO SAMCOE HOLDING CORPORATION, OF NEW YORK, N. Y., A CORPORATION OF NEW YORK

METHOD OF AND APPARATUS FOR TREATING TUBULAR TEXTILE FABRICS

Application filed May 31, 1930. Serial No. 458,159.

This invention relates to the treatment of tubular fabrics and particularly to the application thereto of liquids for the purpose of delustering, weighting, dyeing, softening, or otherwise modifying the character of the fabric.

The application of solutions and liquids to tubular fabrics for the purpose of modifying the characteristics of the fabric has been accomplished, heretofore, in vats or tanks in which the fabric is treated in rope form. Owing to the condition of the fabric it has been impracticable to secure uniform action of the solutions used, for example in dyeing such fabrics the color rarely presents a uniform appearance when the fabric is dried. Furthermore, it is not practicable in vats to employ chemicals which are insoluble in water, that is to say, the fabric cannot be treated with a chemical agent in suspension in accordance with the practice heretofore in vogue.

It is the object of the present invention to provide a simple and effective method permitting the uniform application of chemical agents to tubular fabrics for the purposes indicated, and a simple apparatus whereby the procedure is facilitated. Various liquids including chemicals in solution or suspension can be applied thus uniformly to the tubular fabric with the minimum of effort and maximum assurance of a uniform and satisfactory product.

In carrying out the invention, I apply the liquid treating agent to the fabric by dipping or spraying and then remove the surplus liquid by passing the fabric through a wringer. Preferably the fabric is distended laterally when the liquid is applied and it is advantageous also to maintain the fabric under longitudinal tension. After the fabric leaves the wringer rolls it may be rolled in a damp condition and thereafter treated by any suitable drying and finishing operation, or it may be conveyed directly to the drying and finishing apparatus.

In applying the liquid to the fabric, various means may be employed. For example, the fabric may be dipped into a bath of the liquid. It may be distended then and conveyed through the wringer. Or, the liquid may be sprayed upon the distended fabric before it enters the wringer rolls. The surplus liquid which is squeezed from the fabric may be collected and returned to spray the fabric as it passes through the apparatus. Alternatively the lower wringer roll may dip into a bath of the treating liquid. The film of liquid collected on the lower roll will be carried to the fabric as it enters the bight of the rolls and will be forced into the fabric so that the latter is thoroughly impregnated, the surplus, if any, being returned to the receptacle in which the liquid is maintained. Similarly a bath of the liquid may be maintained in front of the wringer rolls and the fabric may be directed through the bath and thence into the wringer rolls where the surplus is removed. This surplus may be collected and returned to the bath.

In practising the invention, I preferably employ mechanism for distending the fabric such as is illustrated and described more particularly in Patent No. 1,790,655. The apparatus embodies spaced rolls driven at a predetermined rate and co-operating with a floating stretcher frame enclosed within the tubular fabric and having rolls which are rotated by contact through the fabric with spaced driven rolls. The tubular fabric is distended to the desired amount depending upon the initial and desired width, by lateral adjustment of complementary parts of the frame. Rollers, which are positively driven to afford a peripheral speed preferably slightly higher than that of the spaced driving rolls, co-operate with idler rolls outside the fabric at the lateral edges of the frame. Hence both the top and bottom as well as the sides of the tubular fabric are propelled positively at a predetermined rate. The fabric is opened initially by a spreader which is sized in accordance with the width of the fabric treated and is interchangeable with spreaders of varying dimensions to cooperate properly with the propelling mechanism. The spreader offers substantially no resistance to the fabric, the friction being easily overcome by the uniform pull of the propeller.

From the propeller the fabric is fed to wringer rollers which are positively driven. Suitable means are provided to maintain the fabric in a laterally stretched condition between the propelling mechanism and the wringer rollers. To effect the stretching of the fabric in the direction of its length, a suitable tension is maintained in the fabric between the propeller mechanism and the wringer rollers. The tension is maintained by a differential in the speed of the fabric at the rolls of the propeller mechanism and at the wringer. This is effected by driving the wringer rolls to give the fabric a definite linear speed at the bight of the rolls and by similarly driving the rolls of the propeller so that the fabric is fed at a slightly lower speed. The tension must be varied depending upon the particular fabric which is treated, and should be adjusted to give the required stretch to the fabric. Provision may be made, therefore, to vary the speed of the propeller rolls, for example. Thus any desired differential may be maintained with a corresponding longitudinal tension on the fabric.

The fabric which is positively fed by the propeller in a distended condition is brought to the wringer under tension with the two opposite layers in contact, and the double thickness of fabric passes between the wringer rolls, is subjected to pressure and is substantially freed from water. Because of the tension on the fabric as it enters the wringer rolls, it is impossible for any wrinkle to form in either the upper or lower layer. The fabric leaves the wringer as a flattened tube, free from wrinkles and nearly dry. It may be folded or preferably rolled on a mandrel, and thereafter subjected to further treatment to dry and finish the fabric, or it may be delivered directly to the drying and finishing machine.

The invention will be described in further detail by reference to the drawing, in which

Fig. 1 is a diagrammatic view of an apparatus embodying the propeller and wringer rolls with means for spraying a liquid upon the fabric;

Fig. 2 is a similar view illustrating the application of the liquid by means of the lower wringer roll;

Fig. 3 is a diagrammatic view illustrating the dipping of the fabric in a suitable receptacle containing the liquid; and

Fig. 4 is a diagram illustrating the application of the principle shown in Fig. 3 in a slightly different form of apparatus.

Referring to the drawing, 5 and 6 indicate co-operating wringer rolls preferably having a hard surface. It is to be understood that such rolls may be driven positively by suitable mechanism and that provision may be made for adjusting the pressure of the rolls upon the fabric.

The fabric 7 enters the apparatus in the form of a rope which may be either wet or dry, and is distended by a spreader 8 disposed within the fabric and supported by a roll 9. The spreader is connected to the frame 10 of the propeller mechanism. The latter is supported between rolls 11 and 12 which are positively driven through any suitable mechanism. Provision may be made to adjust the speed of either of the rolls 5 and 6, or the rolls 11 and 12, to afford the proper differential in the speed of the fabric in order to maintain longitudinal tension therein.

Rollers 13 and 14 are supported on the frame 10 and co-operate with the rolls 11 and 12 to maintain the fabric in stretched relation and laterally stretched condition and to propel it at the desired speed. End rollers (not shown) are provided, as disclosed in the application aforesaid, to facilitate the movement of the fabric. The fabric as it is propelled is maintained in laterally stretched condition by arms 15 which may extend to the bight of the wringer rolls 5 and 6. After passing through the wringer rolls the fabric engages a roll 16 and may be wound upon a mandrel 17.

The application of the liquid is accomplished by a spray nozzle 18 extending across the width of the fabric in advance of the wringer rolls 5 and 6. Liquid is supplied to the spray nozzle through a pipe 19 by a pump 20 which is connected to a receptacle 21 in which the liquid is collected. A pan 22 beneath the wringer rolls deflects the liquid which is squeezed from the fabric into the receptacle 21. As indicated in dotted lines in Fig. 1, the spray nozzle 18′ may be disposed ahead of the propeller and the liquid may be circulated through pipe 19′, pump 20′, receptacle 21′ and pan 22′. The liquid may be delivered to the receptacle 21′ by a pipe 22″.

The operation will be understood readily from the foregoing description. The liquid containing, for example, chemical agents adapted to deluster, weight, dye, soften or otherwise modify the fabric, either in solution or suspension, is sprayed uniformly over the fabric and readily saturates it before the fabric enters the bight of the wringer rolls 5 and 6. The surplus liquid is removed by the wringer rollers and returns to the receptacle 21, whence it is recirculated through the spray nozzles. The application of the liquid in the manner described results in uniform impregnation of the fabric. The amount of the chemical agents thus added to the fabric may be regulated easily by varying the concentration of the solution, the speed of travel of the fabric, the pressure of the rolls, etc. The procedure and apparatus af-

ford, therefore, an effective means for modifying the characteristics of tubular fabrics.

In Fig. 2 of the drawing, I have illustrated a modification of the apparatus in which wringer rolls 23 and 24 are mounted and driven in accordance with the preceding embodiment of the invention. The fabric is propelled similarly by the propeller mechanism (not shown) and is maintained in laterally distended condition by arms 25. The desired longitudinal tension may be maintained through a differential in the speed of the wringer rolls and of the propeller mechanism. The wringer roll 24 dips into a pan 26 containing a supply of the treating solution which is maintained by a pipe 27 through which the liquid is circulated from a receptacle 28 by a pump (not shown). The overflow of liquid is collected by a pan 29 and returns to the receptacle 28. A film of the liquid is carried upwardly by the wringer roll 24 and is forced into the fabric as it enter the bight of the rolls 23 and 24 with the result that the fabric is uniformly impregnated with the liquid, the surplus of which is immediately separated as the fabric passes between the wringer rollers. The impregnated fabric may pass then over a roll 30 and may be wound on a mandrel (not shown) or otherwise treated.

In Fig. 3 another modification of the apparatus is illustrated, in which wringer rolls 31 and 32 are supported and driven as in the preceding embodiments. The fabric is propelled similarly by the propeller mechanism as illustrated in Fig. 1, and longitudinal tension is maintained in the fabric by a differential in speed between the wringer rolls and the propeller. Arms 33 hold the fabric in laterally distended position.

A transversely disposed receptacle 34 is provided for the treating liquid which is supplied thereto by a pipe 35 through a pump (not shown) from a receptacle 36 in which the liquid collects. A roller 37 in the receptacle 34 causes the fabric to dip into the liquid before it enters the bight of the wringer rolls 31 and 32. The surplus liquid is removed by the wringer rolls and is collected in a pan 38, whence it descends into the receptacle 36. From the wringer rolls the fabric passes over a roll 39 and may be wound upon a mandrel (not shown) or may be otherwise treated. As in the preceding embodiment of the invention, the fabric is impregnated with the liquid as it passes through the receptacle 34.

A slightly modified form of the apparatus is illustrated in Fig. 4 in which wringer rolls 40 and 41 are supported and driven as in the preceding embodiments of the invention, and the fabric is propelled by a propeller mechanism (not shown) as illustrated in Fig. 1. The fabric is maintained in laterally distended condition by arms 42 and suitable longitudinal tension is maintained on the fabric by a differential in speed between the propeller and the wringer rollers. A receptacle 43 is disposed between the propeller and the wringer rollers and is adapted to be supplied with the treating liquid by a pipe 44 which is connected through a pump (not shown) with a receptacle 45. The surplus liquid is separated by the wringer rolls 40 and 41 and is collected in a pan 46, whence it returns to the receptacle 45.

Rollers 46, 47 and 48 are disposed in the receptacle 45 and are adapted to guide the fabric in its distended condition into the liquid which is maintained in the receptacle whereby the fabric is impregnated uniformly with the desired agent. After passing through the wringer rolls 40 and 41, the fabric may engage a roll 49 and may be wound on a mandrel (not shown) or may be treated otherwise.

The procedure as described is most effective in applying various liquids, including solutions and suspensions of chemical agents to both dry and wet fabrics. The application of pressure to the fabric particularly while it is in a distended condition tends to distribute the impregnating material uniformly throughout the fabric, thus ensuring a product of uniform and satisfactory appearance. Furthermore the application of the liquid in the manner described is most economical in respect to labor, time required, and simplicity and consequent low cost of the apparatus employed. Instead of large vats with complicated stirring mechanism and the various types of apparatus heretofore required to impregnate and subsequently dry the fabric, I am able to complete the treatment in the manner described and with the simple and inexpensive apparatus which delivers the fabric as a flattened tube free from wrinkles and substantially free from moisture, so that the drying and finishing of the fabric is easily accomplished.

Various changes may be made in the procedure, particularly with respect to the liquid employed, and in the details of the apparatus used, without departing from the invention or sacrificing any of the advantages thereof.

Where the words "distended" or "distending" are used in the appended claims, they are intended to have their broad meaning, and unless otherwise qualified refer either to a spreading of the fabric or stretching thereof; thus the fabric when in the form of a flattened tube is "distended"

I claim:

1. The method of treating continuous lengths of tubular textile fabric while the fabric is traveling which comprises progressively opening the fabric to its tubular proportions, converging the tube into flat distended form with a simultaneous longitudi-

nal tension, applying a treating liquid to the fabric and subjecting the distended fabric immediately to rolling pressure to remove the surplus liquid.

2. The method of treating tubular textile fabric which comprises progressively distending a traveling web of the fabric to its tubular proportions, converging the tube into flat distended form, applying a liquid containing a treating agent to the distended fabric and removing the surplus liquid from the fabric.

3. The method of treating tubular textile fabric which comprises progressively distending a traveling web of fabric to its tubular proportions, converging it into a flattened tube and conveying the flattened tube through a bath of liquid containing the treating agent and removing the surplus liquid.

4. The method of treating tubular textile fabric which comprises feeding the fabric progressively in its tubular form and then as a flattened distended tube under lateral tension, applying a liquid containing the treating agent to the fabric while distended and removing the surplus liquid from the fabric.

5. The method of uniformly impregnating tubular textile fabric with a predetermined amount of chemical liquid which comprises progressively opening the fabric to its tubular proportions, converging the fabric into flat distended form while subjected to longitudinal tension, conveying the flat distended fabric through a bath of liquid containing a treating agent and removing the surplus liquid from the fabric.

6. The method of uniformly impregnating tubular textile fabric with a predetermined amount of chemical liquid which comprises progressively opening the fabric to its tubular proportions, converging the fabric into flat distended form while subjected to longitudinal and lateral tension, conveying the flat distended fabric through a bath of liquid containing a treating agent and removing the surplus liquid from the fabric.

7. The method of treating tubular textile fabric which comprises progressively distending a traveling web of fabric to its tubular proportions, converging the fabric into flat distended form while subjecting it to regulated and uniform longitudinal tension and conveying the flat distended fabric through a bath of liquid containing the treating agent and removing the surplus liquid.

8. The method of impregnating a traveling web of tubular textile fabric which comprises progressively distending the traveling web of fabric applying a liquid treating agent to a cylindrical surface, causing the distended fabric progressively to contact with the surface carrying the liquid and continuously removing the surplus liquid from the traveling fabric by rolling pressure.

9. In an apparatus for treating tubular textile fabric, means for progressively distending and propelling the fabric, said means adapted to be inside the traveling tubular fabric, means for applying a liquid treating agent to the distended fabric, and wringer rolls spaced from the propelling means.

10. In an apparatus for treating tubular textile fabric, means for progressively distending and propelling the fabric, said means adapted to be inside the traveling tubular fabric, means for applying a liquid treating agent to the distended fabric, wringer rolls spaced from the propelling means, and means for returning the surplus liquid removed by the wringer rolls to the liquid applying means.

11. The method of impregnating a travelling web of tubular textile fabric which comprises spreading the fabric progressively to a flattened tube, applying a liquid treating agent to the flat distended fabric as it advances and subjecting the fabric to pressure to remove the surplus liquid.

12. The method of uniformly treating tubular textile fabrics which comprises progressively spreading the fabric into flat distended form, applying an excess of a treating liquid to the flat distended fabric and subjecting the fabric with its two layers in contact to rolling pressure to remove the surplus liquid.

In testimony whereof I affix my signature.

SAMUEL COHN.