United States Patent [19]

Fletcher et al.

[11] **3,809,049**

[45] **May 7, 1974**

[54] **APPARATUS FOR CUTTING ROUGH-SURFACED STONE BODIES**

[75] Inventors: **Ralph A. Fletcher**, Bedford, N.H.; **Joseph R. Oliver**, Lowell, Mass.

[73] Assignee: **H. E. Fletcher Co.**, Westford, Mass.

[22] Filed: **Dec. 1, 1971**

[21] Appl. No.: **203,527**

[52] **U.S. Cl.** ..... **125/23 C**

[51] **Int. Cl.** **B28d 1/32**

[58] **Field of Search** ..... 125/23 R, 23 C, 23 T; 145/62, 61 J

[56] **References Cited**

UNITED STATES PATENTS

1,541,078	6/1925	Sudweeks	195/62 X
3,424,144	1/1969	Giconi	125/23 R
3,559,631	2/1971	Mangis	125/23 C
3,692,370	9/1972	Hasz	51/169 X

Primary Examiner—Harold D. Whitehead
Assistant Examiner—Nicholas P. Godici
Attorney, Agent, or Firm—Munroe H. Hamilton

[57] **ABSTRACT**

Rough-surfaced blocks of stone are cut into a number of smaller pieces of a desired thickness by means of specially designed guillotine cutting apparatus in which isostatically held cutting elements are engaged against an upper side of a block and cooperate with a lower set of cutting elements of conventional form engageable with the underside of the block to apply hydraulically actuated cutting forces. The invention method and apparatus provides for the isostatically held cutting elements being removably contained in a vertically adjustable retaining structure. Each of the cutting elements is specially designed to work against a very rough-surfaced block, for example, one having a top side presenting sloping surfaces and projections whose deviations from a plane surface exceed the capacilities of conventional guillotine cutters. Spring means are combined with the cutting elements to provide rapid cutter positioning both during and after a cut is made and sides of the cutting elements are yieldably supported to absorb lateral displacement forces when angularly engaged against the sloping surface portions of the block.

4 Claims, 8 Drawing Figures

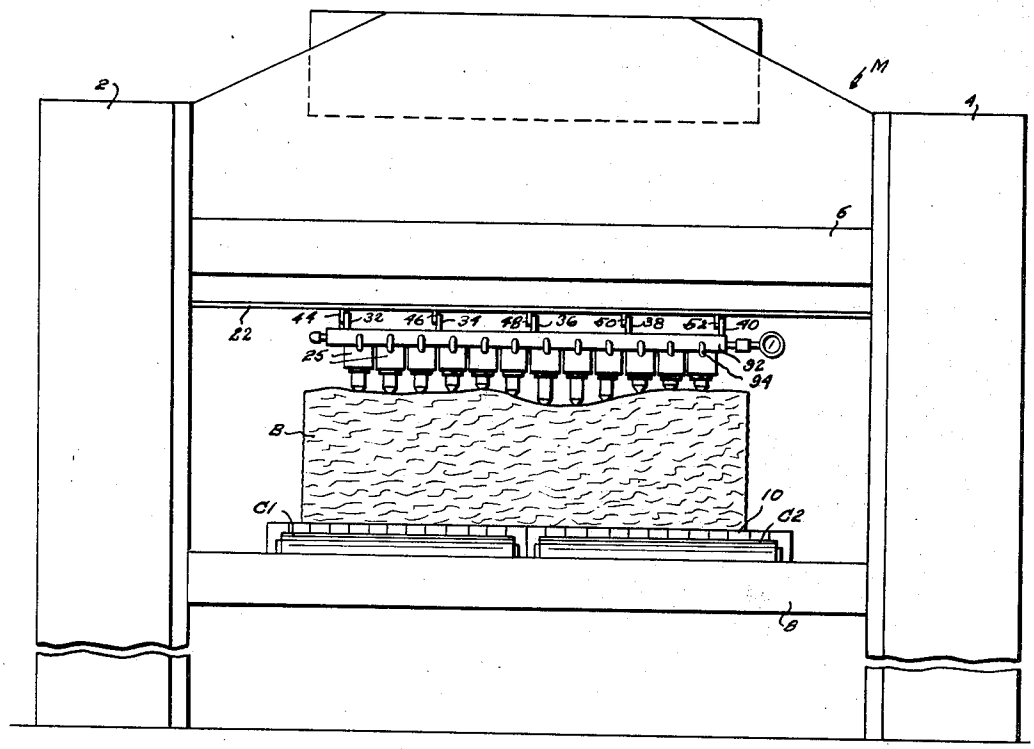

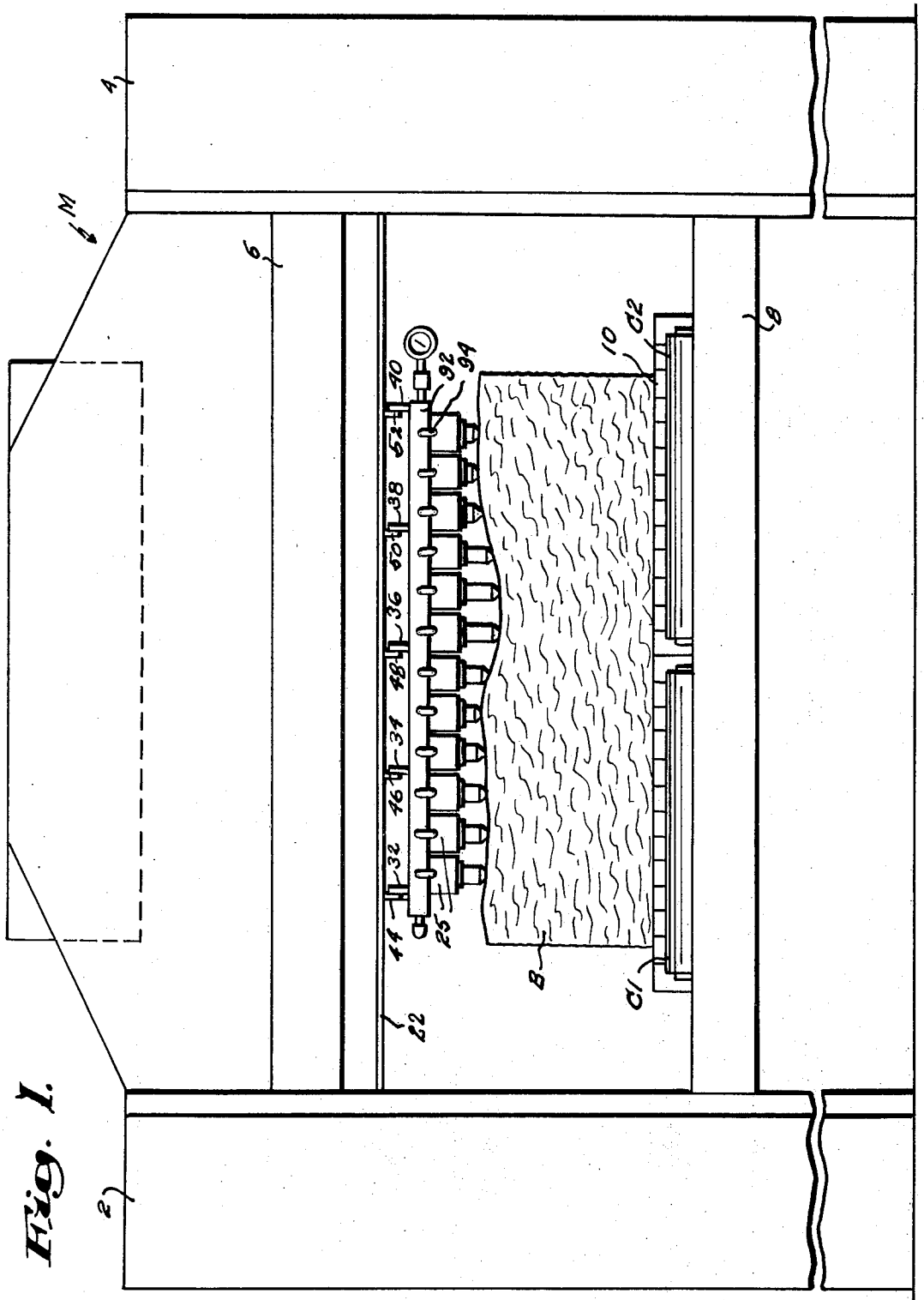

Fig. 1.

Inventors:
Ralph A. Fletcher,
Joseph R. Oliver,
by Thomas H. Hamilton Attorney

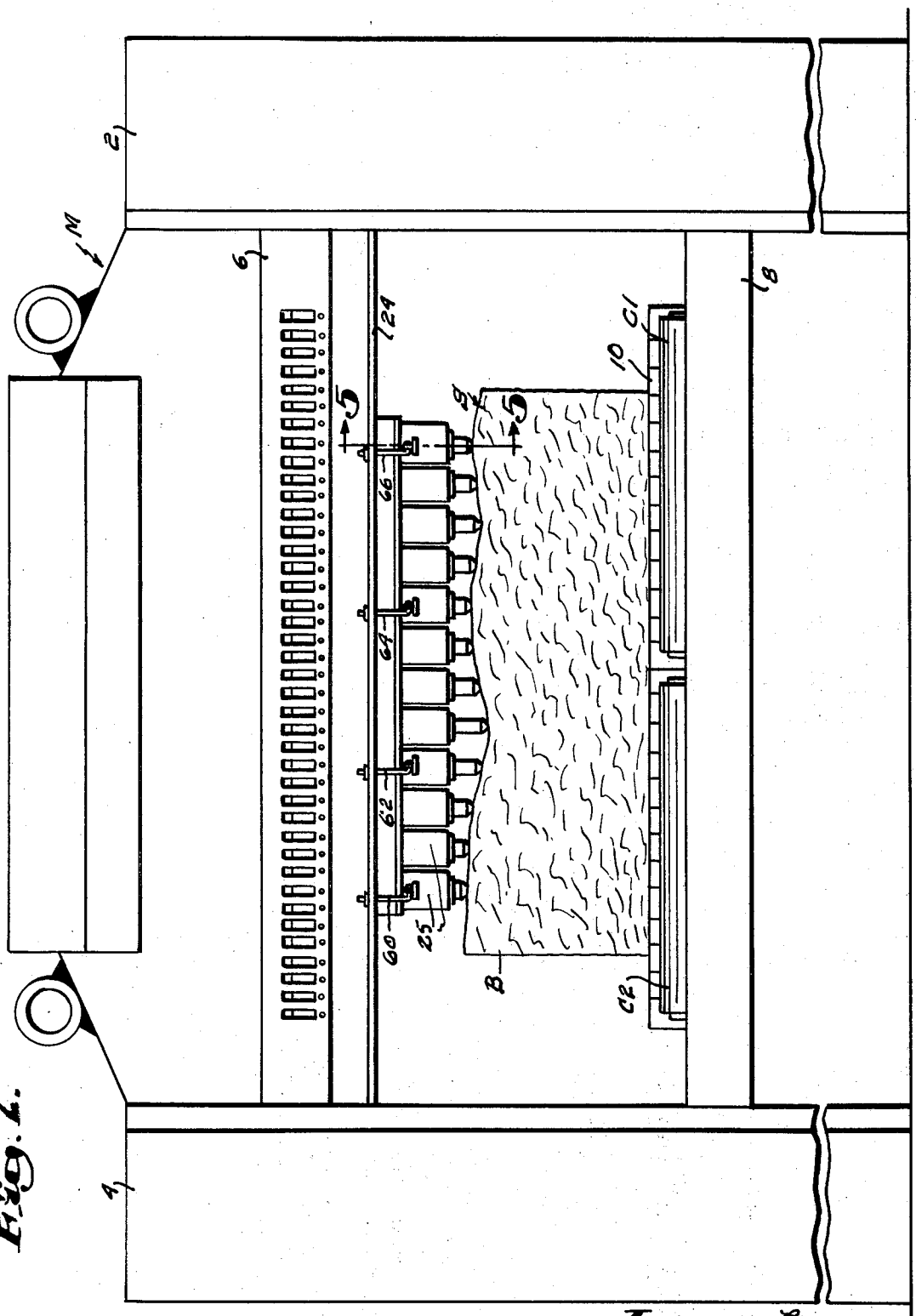

Fig. 2.

Inventors:
Ralph A. Fletcher,
Joseph R. Oliver,
by Munn & Hamilton Attorney

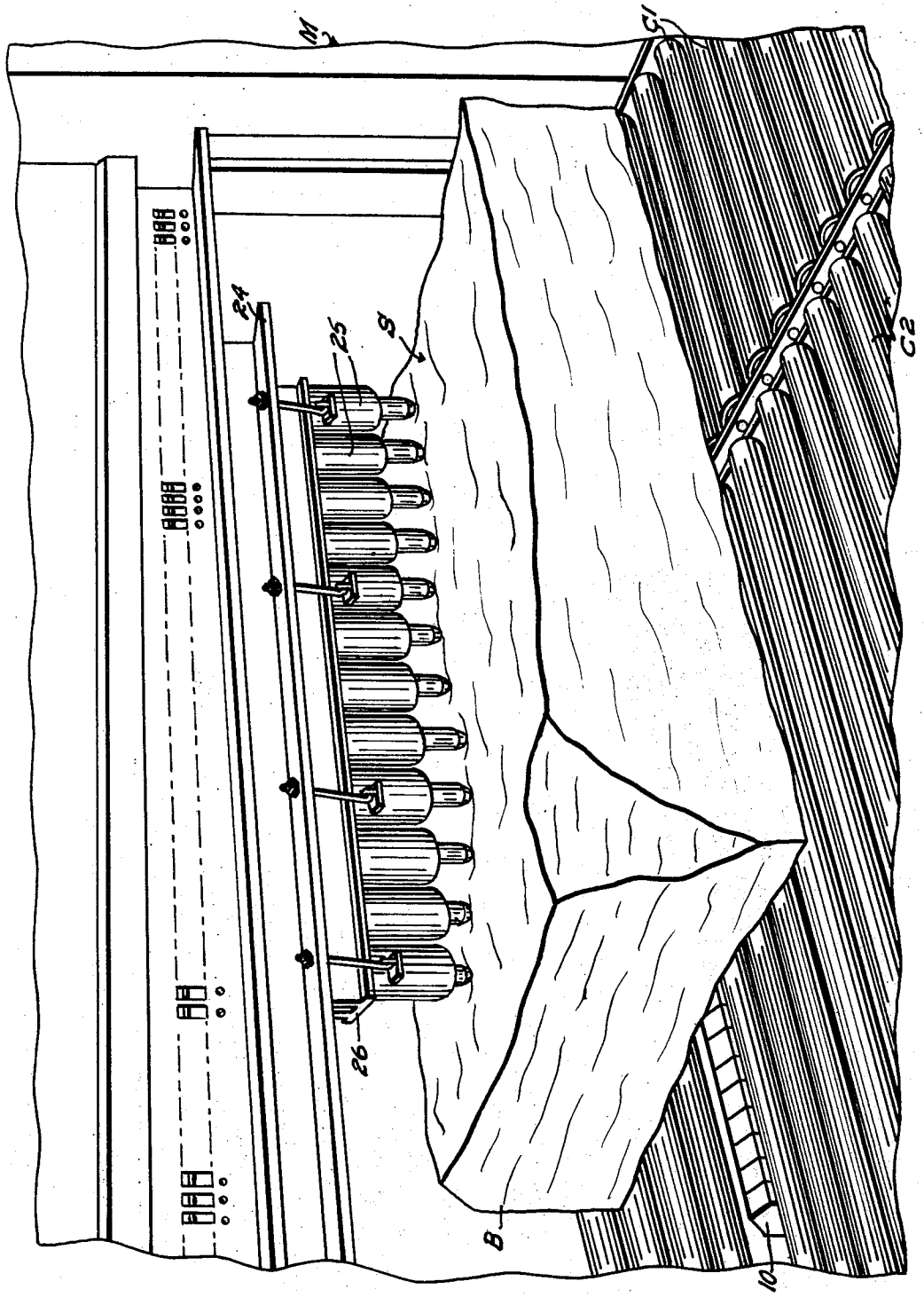

Fig. 3.

Inventors:
Ralph A. Fletcher,
Joseph R. Oliver,
by Munn & Hamilton
Attorney

Fig. 4.

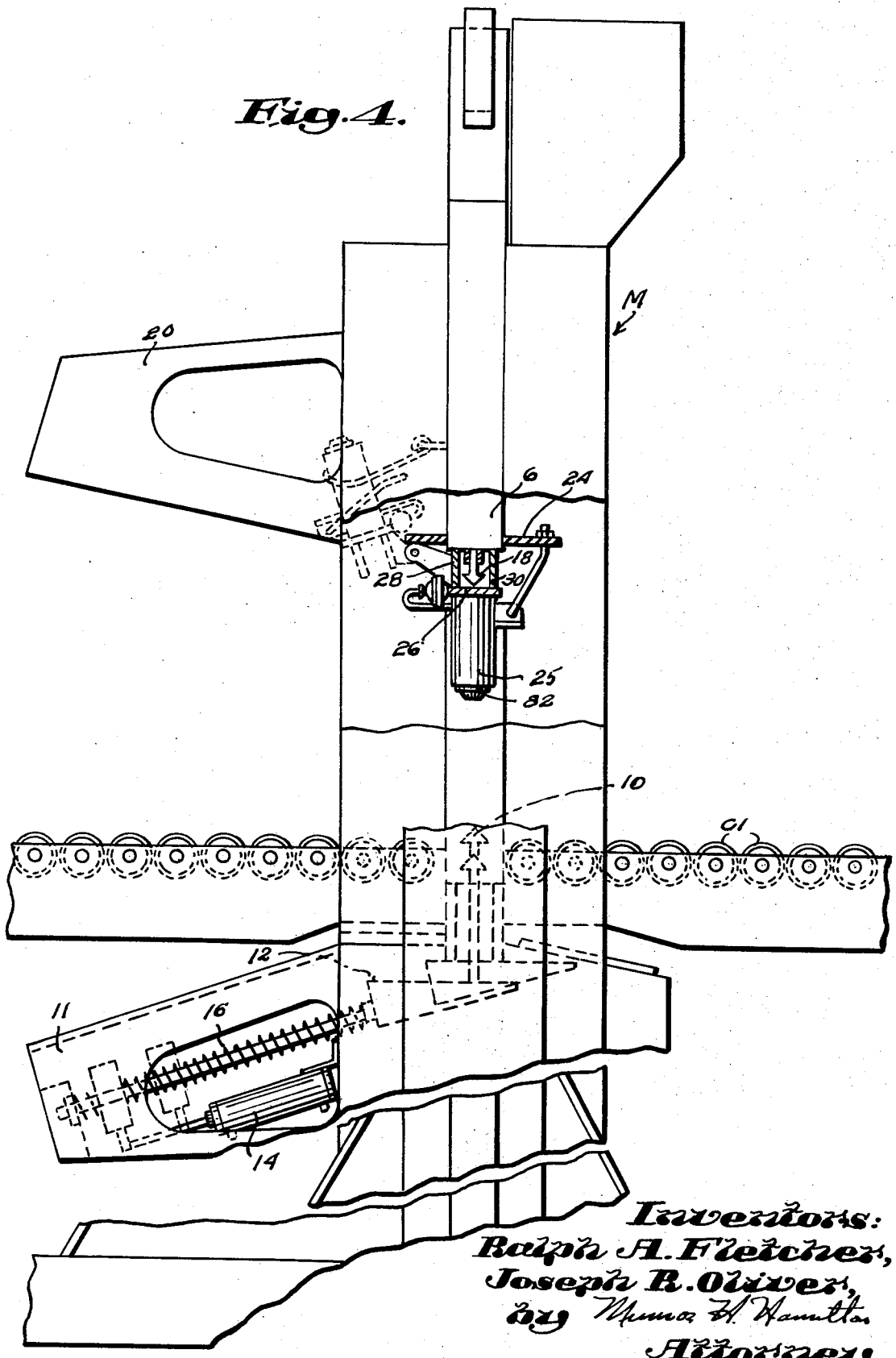

Inventors:
Ralph A. Fletcher,
Joseph R. Oliver,
by Munn & Hamilton
Attorney

Fig. 5.

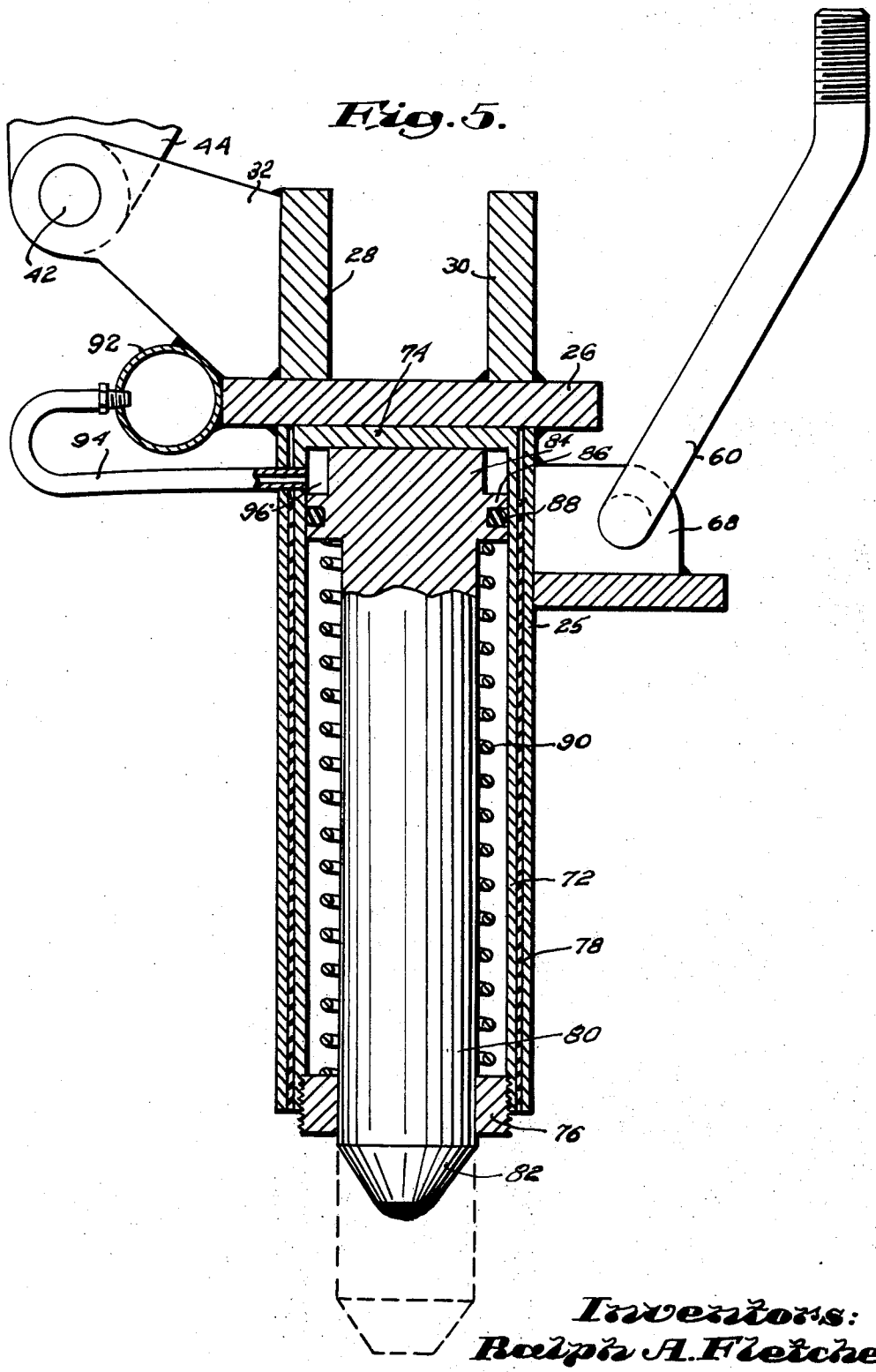

Inventors:
Ralph A. Fletcher;
Joseph R. Oliver,
by Thomas V. Hamilton
Attorney

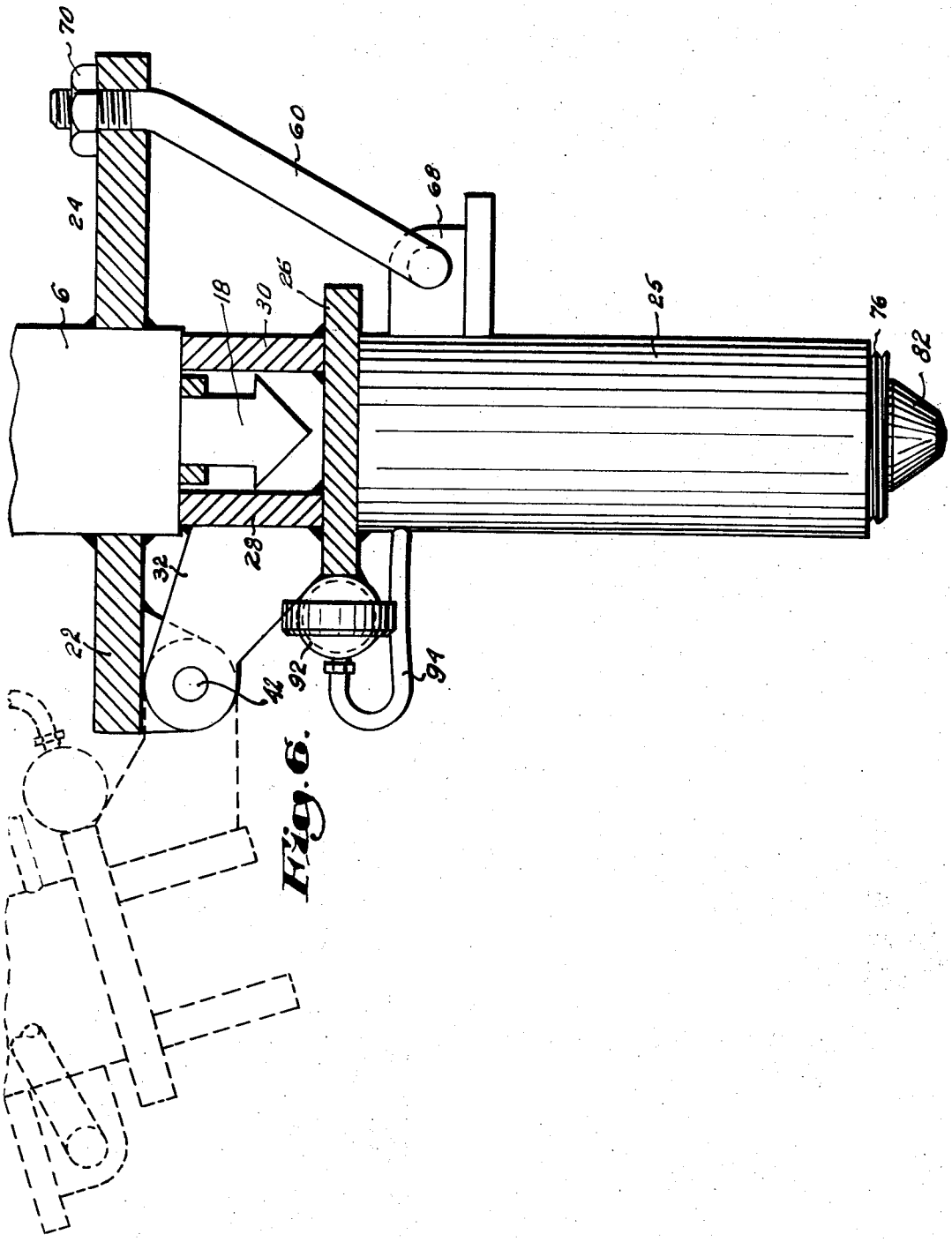

Fig. 6.

Inventors:
Ralph A. Fletcher,
Joseph R. Olivet,
by Munn & Hamilton
Attorneys

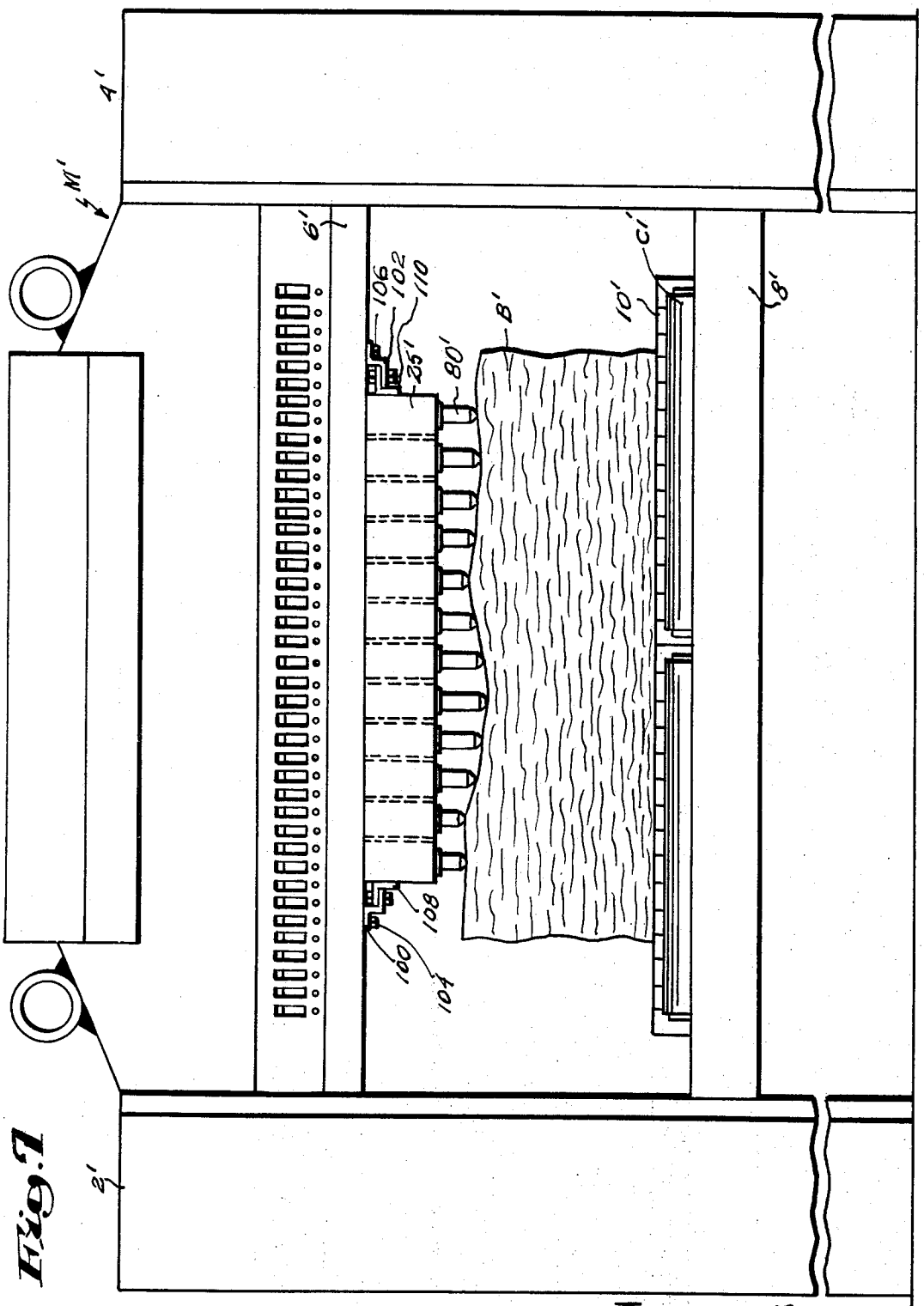

Fig. 7

Inventors:
Ralph A. Fletcher,
Joseph R. Oliver,
by Munn & Hamilton Attorney

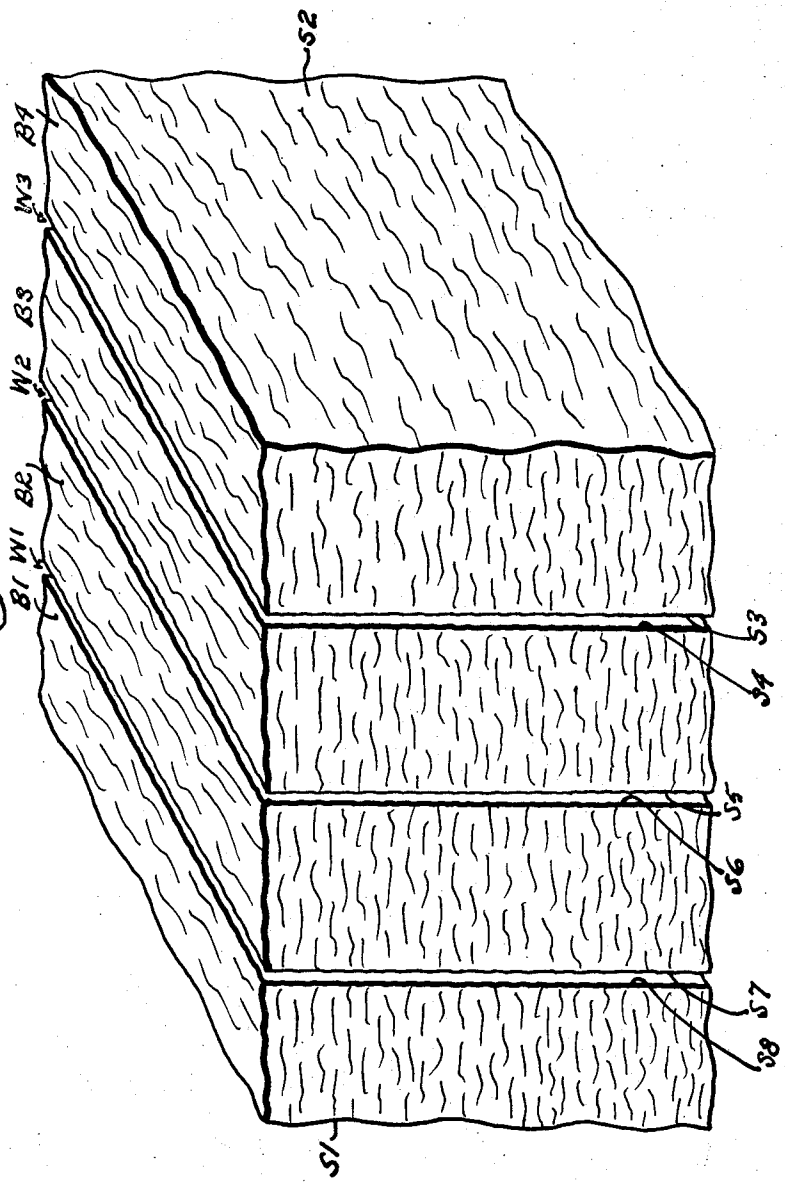

Fig. 8.

Inventors:
Ralph A. Fletcher,
Joseph R. Oliver,
by Thomas H. Hamilton
Attorney

APPARATUS FOR CUTTING ROUGH-SURFACED STONE BODIES

This invention relates to a method and apparatus for cutting a block of stone with a machine of the type generally referred to as a guillotine machine in which the block is supported between upper and lower sets of hydraulic pressure-operated cutting elements and the block is cut into a number of smaller pieces of a desired thickness.

In one specific aspect, the invention is concerned with a method and apparatus for cutting into usable form waste pieces of granite resulting from flame channelling and other granite quarrying operations. These waste pieces are commonly referred to in granite working as "rough-backs." The rough-back pieces usually have one side relatively smooth as a result of wire sawing and an opposite side presenting a rough exterior characterized by sloping surfaces and projections extending outwardly, for example, throughout a range of from 2 to 5 inches or more. It is found that rough-back blocks and similar rough-surfaced mineral bodies cannot be handled satisfactorily by conventional sets of cutting elements employed in guillotine machines as presently used. A chief difficulty arising in working rough-back blocks or other very rough-surfaced blocks is due to limitation in the distance through which conventional cutting elements may be moved in adjusting to the surface to be engaged. For example, in using a guillotine machine such as a Hydrasplit Machine, manufactured and sold by Park Tool Company of St. Cloud, Minnesota, the wedge adjusting mechanism utilized to permit individual chisel blocks to be retracted or lowered in accordance with the contour of an irregular surface against which the set of chisels is applied cannot accommodate many rough-surfaced blocks. Up to the present time, therefore, substantial quantities of stone pieces such as rough-backs and the like have not been regarded as usable and have been treated as waste, thus increasing cost of quarrying generally.

It is a chief object of the invention to cope with the problems indicated and to devise improved methods and means for cutting rough-surfaced blocks of stone such as rough-backs and the like into usable form in a practical and economical manner.

Another object of the invention is to devise an improved method of engaging individually adjusting cutting elements along a rough-surfaced block of stone having a relatively large deviation from a plane surface.

Still another object is to provide a method of applying hydraulic cutting pressure utilizing a set of isostatically held cutting elements to engage an upper rough-surface of a block in cooperation with a lower set of cutting elements of conventional nature engageable against the underside of the block.

Another object is to devise an attachment for a guillotine machine by means of which a set of isostatically held cutting elements may be detachably received to a guillotine type machine to take the place of an upper set of conventional wedge operated chisel blocks.

Still another object is to provide a set of isostatically held cutting elements combined with spring means to provide for rapid cutter positioning both during and after a cut is made so that a minimum of operative time is required and cutting may proceed at a much faster rate than has heretofore been possible.

The nature of the invention and its other objects and novel features will be more fully understood and appreciated from the following description of a preferred embodiment of the invention selected for purposes of illustration and shown in the accompanying drawings, in which:

FIG. 1 is a front elevational view of a guillotine type machine having combined therewith adjustable cutting means of the invention;

FIG. 2 is another elevational view of the apparatus shown in FIG. 1 as viewed from an opposite side thereof;

FIG. 3 is a perspective view further illustrating the adjustable cutting means of the invention in a typical operative position;

FIG. 4 is a fragmentary side elevational view of the machine showing the cutting means of the invention partly in cross section;

FIG. 5 is an enlarged cross-sectional detail view of an adjustable cutting means of the invention further illustrating its use as an attachment to a conventional stone cutting machine;

FIG. 6 is a detail view, partly in cross section, illustrating in dotted lines a position assumed by the adjustable cutting means of the invention when the machine is used in the conventional manner.

FIG. 7 is an elevational view illustrating a modified form of the cutting means of the invention;

FIG. 8 is a diagrammatic view of a block of stone having rough surfaces of the nature dealt with in the invention.

Referring more in detail to the drawings, attention is directed to FIGS. 1–5 in which we have illustrated one preferred embodiment of our invention constructed in the form of an attachment for use with a conventional guillotine machine of the general class indicated above. It should be understood that the method and apparatus disclosed hereinafter in the detailed description of the FIGS. 1–5 is not intended to be taken as limiting the invention to use in the form of an attachment only, and the basis concept and mode of operation together with the isostatic holding principle may be desired to be employed as a permanently constructed part of guillotine machines of various types.

The principal parts of the apparatus of the invention include a set of individually contained cutting elements; fluidically controlled means for isostatically holding the cutting elements in varying positions of adjustment with respect to an irregular surface of a block of stone; and an adjustable retaining structure for moving the set of cutting elements and the fluidically controlled means into and out of an operative position.

One desirable form of adjustable retaining structure is illustrated in FIGS. 1–6. FIG. 7 illustrates another desirable form. Indicated in the arrangement shown in FIGS. 1–6 is a rotary frame secured in hinged relationship to a transverse beam component of the guillotine machine in a position to be swung into and out of an operative position immediately below upper cutting elements conventionally employed in the machine. The rotary frame is of rugged construction and specially designed with bearing means capable of receiving heavy loads and large pressures normally exerted by the hydraulic rams mechanism of a guillotine machine. In combination with the rotary frame is provided a set of cutting elements isostatically held in cylindrical enclosure bodies secured at one side of the rotary frame.

Each of the enclosure bodies is in sealed communication with a fluid body of a constant volume confined in a manifold member which is also mounted at one side of the rotary frame.

Considering these parts in greater detail, FIGS. 1 and 2 illustrate a guillotine type machine of the class used in cutting stone and generally denoted in the drawings by arrow M. As shown therein, the machine M is constructed with spaced vertical sides 2 and 4 in which are contained hydraulic ram means of a type well known in the art. Located between the vertical sides 2 and 4 are upper and lower transverse beam members 6 and 8 which are vertically adjustable in response to movement of the hydraulic rams in the well-known manner. Two sets of conveyor rolls, C1 and C2 are arranged between the sides 2 and 4 for receiving a block B of granite or other mineral and moving the block along a longitudinal path of travel.

The block B is intended to be illustrative of a very rough-surfaced stone body which is normally classified as a waste piece. Such a waste piece results from the operations indicated diagrammatically in FIG. 8. As shown in FIG. 8, a relatively large section of granite is obtained from a granite quarry by means of quarrying operations such as flame channelling, splitting and wire sawing. In the granite body indicated in FIG. 8, the outer sides S1 and S2 have been formed by flame channelling and present roughened surfaces of pronounced irregularity. Wire saw cuts have been made to separate the mass into blocks B1, B2, B3 and B4. The block B1 is thus formed at one side with a relatively uniform wire-sawed surface S8, while the opposite outer side of this block presents a roughened surface S1.

It will be observed that with three of the cuts having been made to produce the blocks B1, B2, B3 and B4, there are obtained two blocks B2 and B3 which do not have a roughened surface, however, both blocks B1 and B4 do have roughened surfaces as S1 and S4, and this has in the past resulted in two pieces of stone not usable in a guillotine machine and thus regarded as waste. It will be understood that the invention is particularly suited to handle the type of rough-surfaced blocks represented by blocks B1 and B4.

FIG. 1 illustrates the conveyor mechanism and the block B as viewed from the entering side of the machine, and FIG. 2 illustrates the same apparatus as viewed from the discharge side. FIG. 3 also illustrates the assembly described and further shows diagrammatically a roughened top surface S which is characteristic of rough-back blocks of granite as described above having sloping surfaces and projections whose deviation from a plane surface are of a substantial nature varying from at least 2 to 4 inches and more.

Midway of the conveyors C1 and C2 is provided a cleared space through which a set of cutting elements 10 are vertically adjustable when actuated by hydraulic ram means located in the lower section of the sides 2 and 4. The cutting elements are designed to be first raised into a position of engagement against the bottom of the block B as shown in FIGS. 1–3 and thereafter very large hydraulically exerted pressure may be transmitted through the cutting elements.

As shown in FIG. 4, each of the cutting elements 10 are conventionally adjusted by means of a spring-loaded wedge mechanism moved in bracket means 11 indicated at the lower left hand side of FIG. 4 and including wedge means 12 operated by cylinder means 14 and spring means 16 to raise and lower the cutting elements 10 as suggested in dotted lines in FIG. 4.

This arrangement provides for locating cutting elements through a range of travel of from one to two inches and allows the cutting elements to engage against a bottom side of the block whose surface irregularity is at a minimum, as occurs with a wire sawed surface of the type described above and noted at S3–S8 in FIG. 8.

Arranged to cooperate with the lower set of cutting elements described is an upper set of cutting elements of the class conventionally employed to engage against an upper side of a wire sawed block. As shown in FIG. 4, the cutting elements indicated by numeral 18 are adjustably supported in the transverse beam 6 and each cutting element is individually positioned against an irregular surface by means of spring loaded wedge adjusting mechanism contained in the bracket part 20 as shown at the left hand side of FIG. 4, and similar to the wedge adjusting mechanism 12.

In accordance with the present invention, we provide an adjustable cutter attachment which is readily combined with the conventional cutting mechanism above-described and which is capable of handling large deviations of the order of from 2 to 5 inches relative to a plane surface. In use, the cutter attachment replaces the upper set of conventional cutting elements.

FIGS. 1 and 2 illustrate the attachment located in an operative position immediately below the conventional cutting elements 18, as viewed from front and back sides of the machine M. As shown in these FIGURES, the attachment includes retaining plates 22 and 24 rigidly secured as by welding at opposite sides of the transverse beam member 6 and movable vertically with the beam member. Secured in hinged relationship to retaining plate 22 is a rotary frame structure 26 indicated in further detail in FIGS. 3, 4, 5 and 6, and having suspended from the bottom sides thereof a plurality of cylindrical cutter elements occurring in spaced relation to one another.

The rotary frame structure comprises an elongated cutter supporting base which has fixed to its upper side a pair of separated bearing walls 28 and 30. The bearing walls are spaced apart a distance suitable for forming a cutter enclosure within which the upper set of conventional cutters 18 are protectively housed as suggested in FIG. 6. Upper bearing edges of the bearing walls 28 and 30 are constructed and arranged to lie in abutting relationship against adjacent bottom surfaces of the member 6 in which position it will be appreciated that very large pressures may be contained.

Hinging arms 32, 34, 36, 38 and 40 are welded or otherwise anchored to the bearing wall 28 as shown in FIG. 6 and at their opposite extremities the hinging arms are pivotally supported on pivot pins as 42 in hinge brackets 44, 46, 48, 50 and 52 welded to the underside of retaining plate 22. By means of this hinging arrangement, the rotary frame may, as suggested in dotted lines in FIG. 6, be swung in a clockwise direction and held in a non-operative position which allows the cutters 18 to be used in the conventional manner.

When in use, however, the rotary frame may be solidly held in the abutting position shown in FIGS. 4, 5 and 6 by means of adjustable holding rods as 60, 62, 64 and 66 which are attached to lug portions as 68 on adjacent cutting units as shown in FIG. 2. Upper ends of

the holding rods are detachably fastened in some suitable manner as by threaded fastenings **70.**

The rotary frame, as earlier noted, serves to support isostatically held cutting elements of the invention, and an important feature of the invention resides in the construction and operation of a set of spaced apart cutting units **25** in which the cutting elements of the invention are contained. As shown in more detail in FIG. **5,** each of the cutter units comprises piston and cylinder means for isostatically holding cutting elements in a suitably adjusted position. As will be observed from an inspection of FIG. **5,** each cutter unit **25** includes an outer cylindrical enclosure body rigidly secured to frame base **26,** an inner cylinder body **72** and an elongated cutting element **80,** formed with a piston head portion **84.** Each cylinder **72** is closed by upper end walls **74** which solidly abut against the frame base **26.** Located around the lower end of each cutting element **80** is a threaded cap as **76** which normally contains a lower end of a coiled spring **90** located around the cutting element **80,** as shown, in a lightly compressed position. The upper end of the coiled spring **90** is yieldably contained by means of an annular shoulder portion **86** formed as an integral part of the piston head portion **84.** The annular shoulder is further formed with a ring groove for securing a sealing ring member **88** in sealing relationship with an inner peripheral wall of the cylinder **72.**

It will be observed that each annular shoulder is so located as to define an upper fluid-containing chamber as **96.** In combination with this fluid-retaining chamber **96** we further provide a manifold member **92** which is mounted along one side of the frame base **26** as indicated in FIG. **5** and which is connected to a supply source for a hydraulic fluid. Connected between the manifold member **92** and respective fluid containing spaces **96** and the several enclosure bodies **25,** are connecting pipes **94,** which provide a passageway through which hydraulic fluid may be moved into and out of the spaces **96** in accordance with positioning of the cutting elements **80** when engaging against an irregular surface such as shown in FIGS. **1, 2** and **3.** It should be understood that the manifold member **92** is completely filled with a volume of hydraulic fluid which is large enough to also fill all of the fluid containing chambers **96** when the cutting elements are in a position of uniform horizontal alignment. The manifold is then closed off and there is thus produced a confined volume of fluid of constant volume. When there occurs movement of one or more of the cutting elements downwardly into a position such as the dotted line position shown in FIG. **5,** with other cutting elements moving upwardly, portions of the constant volume of fluid will be displaced through the connecting pipes **94** and manifold **92** and into adjoining spaces **96** which become larger or smaller, as the case may be.

There is thus realized a means of isostatically holding the cutting elements so that regardless of the relative position of the lower ends of the cutting elements, they will all be held by the constant volume of hydraulic fluid and each of the cutting elements can thereafter transmit very large loads hydraulic pressures against the rotary frame base **26.**

It will also be seen that with the arrangement of parts described, movement of the cutting element from one position to another changes the tension of the springs **90** normally set to maintain all of the cutting elements in a horizontally aligned position. As a result, immediately upon a cutting operation taking place, as suggested in FIGS. **1** and **2,** pressure against the cutting elements is discontinued and the springs instantaneously return the cutting elements to their normal position of horizontal alignment.

Attention is further directed to the cutting elements **80.** These members, in order to deal with large deviations from a plane surface in a rough-surfaced block, are required to be of an elongated nature. For example, in dealing with deviations in a range of from 2 to 5 inches or even more, we have found that the cutting elements may be made with a length of approximately 8 inches and are required to be of heavy construction of solid steel cylindrical section having an outer diameter of approximately 2 to 2½ inches. Such a cutting element construction when contained in the manner described above is found to provide a stroke or travel distance of from 6 to 6½ inches, thus adequately accommodating the type of deviation earlier described. It will be further appreciated that extremely heavy loads in the 8,000 to 10,000 pound range is exerted in the cylinder units and the inner cylindrical sleeve units **72** are also required to be of relatively heavy construction and may be an outer diameter of from 3 to 3½ inches.

Another important feature has to do with the shape of the cutting elements and the manner in which they are held when applied against a sloping or angled surface. In one preferred form the cutting elements **80** of the 8-inch length and 2½ inches outer diameter noted, may be formed at their lower ends with rounded extremities as **82.** These rounded extremities are designed to most effectively engage against a sloping surface of stone and transmit pressure thereto. It will also be understood that some slight lateral displacement may result from a rounded cutting element extremity engaging at an angle to a sloping surface and to contain such lateral displacement forces, we have further provided cushioning sleeves as **78** formed of rubber or rubber-like material. These sleeves are snugly fitted between each cylinders **72** and its outer cylindrical enclosures **25.** This arrangement of parts is most clearly illustrated in FIG. **5** of the drawings.

It has been found in actual working conditions over a period of time that replacement of springs and sealing ring means may become necessary and for this purpose, it is pointed out that each cutting element with its piston head portion and sealing ring, together with coiled spring, may be readily removed from the enclosure body **25** by unthreading the sealing cap **76** and replacing the entire unit with new units. Thus the time and expense of replacement or repairs is greatly minimized.

FIG. **7** illustrates a modified form of attachment of the same general nature as that shown and described in connection with FIGS. **1–6,** inclusive. Conventional frame parts having the same numbers, but primed, of those in FIGS. **1** to **6** are again present and likewise a set of cutting elements are mounted for engagement with a block **B1.** The set of cutting elements include a series of cylindrical bodies **25'** which adjustably contain elongated cutting elements **80'.** Manifold means for providing a constant volume of fluid in communication with the upper ends of the cutting elements is also used in the same manner as already described.

In place of the rotary frame structure **26,** however, we provide channel brackets **100** and **102** which are solidly fastened by bolts **104** and **106** to the underside

of a beam section 6'. A slidable frame having rail portions 108 and 110 containing the set of cutting elements 25' in a position such that the frame may be slidably adjusted along a horizontal path of travel to provide for locating bearing members and cutting elements at a desired point of register with the lower set of cutting elements 10'. In other respects this modified form of the invention operates in the manner already disclosed.

In carrying out a typical guillotine cutting operation in accordance with the invention, a block of stone having a rough surfaced top side is loaded on to the conveyor mechanism C1, C2 and advanced into the guillotine machine until it is located in a position to undergo a cut of a required thickness. This usually is accomplished by moving the block against stop means arranged to provide for desired gauging and to arrest the block in a short interval of time of about 2 to 5 seconds. The machine operator then moves the top section downwardly and the isostatically held cutting elements engage against sloping or angled surfaces of the block B as shown in FIGS. 1, 2 and 3. The cutting elements are variably displaced in accordance with the surface irregularity of the top side S1 and almost immediately assume adjusted positions as the constant volume of confined fluid is displaced in accordance with changes in volume of the fluid-containing chambers 96. This operation can be accomplished in from 1 to 2 seconds by a single operator.

With the isostatically held cutting elements in suitable positions of adjustment, the lower set of cutting elements is moved upwardly to engage the underside of the block. Thereafter hydraulic pressure in a range of from 8,000 to 10,000 p.s.i. is exerted and a cut is made.

The cut takes place almost explosively with the block being suddenly displaced on the conveyor. As this occurs, the cutting elements, in response to spring loading forces of the coiled springs in the cylinder units, quickly move into their normal horizontal position of alignment and thus adequate time is provided for the machine operator to turn the block into a squared position and advance it against a stop so that a series of cuts can be made in rapid succession and at a rate which is economically feasible. A typical rate of cutting, for example, may be one cut every 12 to 15 seconds.

It is intended that cutting with isostatically held cutting elements resiliently contained by a confined body of fluid of constant volume may also be utilized in the manner described above to adjust cutting elements against various other forms of blocks such as one with a lower side having a very rough surface and in some cases cutting may be desired to be carried out against blocks having vertical or angularly disposed rough sides, and this may be done either separately or in conjunction with top and bottom side cutting.

We claim:

1. A machine for cutting a rough-surfaced block of a mineral body, said machine including spaced vertical sides, upper and lower transverse frame members mounted between the sides in vertically spaced relation, a set of cutting elements adjustably supported in the lower frame member and movable into contact with the block, a second set of cylindrically shaped cutting elements attached to the upper transverse frame member and movable into an opposite side of the block, hydraulic ram means for forcing the sets of cutting elements toward one another, said cutting elements being formed with ring retaining ribs and sealing rings received therein, cylindrically shaped chamber means for independently supporting each of the upper cylindrically shaped cutting elements for vertically reciprocating movement to define fluid retaining spaces of varying volume, a supply manifold, a quantity of fluid for filling the manifold and fluid retaining spaces, and spring means located around the cylindrical cutting elements and cooperating with the cutting elements and their sealing rings to normally hold the cutting elements in a position of horizontal alignment.

2. In a stone cutting machine of the class which includes a conveyor for moving a block of stone along a desired path of travel, upright support members located at opposite sides of the conveyor, hydraulic rams received in the upright support members, upper and lower transverse frame elements vertically adjustable between the upright support members and responsive to movement of the hydraulic rams, and upper and lower sets of cutting means mounted in respective frame elements, the combination of an auxiliary cutting apparatus usable in place of the said upper set of cutting means, said cutting apparatus including a cutter-retaining body (formed at its upper side with a channel-shaped bearing section), means for rotatably securing the cutter retaining body to the upper transverse frame element and moving the channel-shaped bearing section into and out of abutting relationship with an underside of said upper frame element to enclose the said upper set of cutting elements in protectively housed relationship, means for detachably holding the cutter-retaining body in said abutting relationship with the frame member, a fluid containing manifold mounted along one edge of the cutter-retaining body, a plurality of spaced tubular enclosures solidly mounted on the retaining body and having cylindrical retainers detachably secured therein, cylindrical cutter elements sealably received in the cylindrical retainers, each of the cutter elements being formed with annular sealing means arranged to define a fluid-containing chamber which is connected to the fluid-containing manifold, means for supplying a volume of fluid under pressure to the manifold and to the fluid containing chambers of the enclosures, and spring means disposed around the cylindrical cutter elements for engaging the annular sealing means externally of the fluid-containing chambers and maintaining said chambers of normally equal volume.

3. In a stone cutting machine of the class which includes a conveyor for moving a block of stone along a desired path of travel, upright support members located at opposite sides of the conveyor, hydraulic ram means received in the upright support members, upper and lower transverse beams vertically adjustable between the upright support members and responsive to movement of the hydraulic ram means, a set of cutting elements mounted in the lower transverse beam, said upper transverse beam including a depending frame structure, a second set of cutting elements supported for vertical adjustment in said frame structure, said frame structure presenting a horizontally disposed base member, a plurality of separated cylindrical enclosure bodies rigidly suspended from the underside of the base member and having cylindrical chambers therein, respective cylindrically shaped cutting elements received in the cylindrical chambers for vertically reciprocating

movement, each of said cutting elements being formed at an intermediate part with an annular rib occurring in spaced relation to an adjacent end wall of a respective cylindrical chamber to define a variable fluid retaining space, each of said annular ribs being formed with a ring groove and a sealing ring located therein to retain fluid in respective fluid retaining spaces, a fluid supply manifold supported at one side of the frame structure, conduit means connecting the manifold with each of the said variable fluid retaining spaces in the cylindrical chambers, each of said cylindrical chambers at a lower end thereof being provided with a threaded closure member through which a respective cutting element may be slidably adjusted, coiled spring members located around each of the cylindrically shaped cutting elements, and each coiled spring member being compressibly contained between a respective threaded closure at a lower end and a respective annular rib of a cutter element at an upper end, a quantity of fluid confined in the manifold and fluid retaining spaces and being of a volume corresponding to the combined volume of the manifold and the fluid retaining spaces, and said coiled springs being of a uniform size and compressibility to yieldably maintain each of the said fluid retaining spaces of uniform volume when the cutting elements are in horizontally aligned relationship to one another.

4. A structure according to claim **3** in which the upper transverse beam is recessed to receive a third set of cutting elements which project downwardly, and said frame structure is supported for rotation about a horizontal axis into and out of a horizontally disposed position below the said downwardly projecting cutting elements and said frame structure further including a channel shaped bearing portion which is operative to enclose the said third set of downwardly projecting cutting elements when the frame is held in a horizontally disposed position.

* * * * *