(No Model.) 2 Sheets—Sheet 1.

N. C. BASSETT.

ELEVATOR OPERATING MECHANISM.

No. 456,108. Patented July 14, 1891.

Fig. 1.

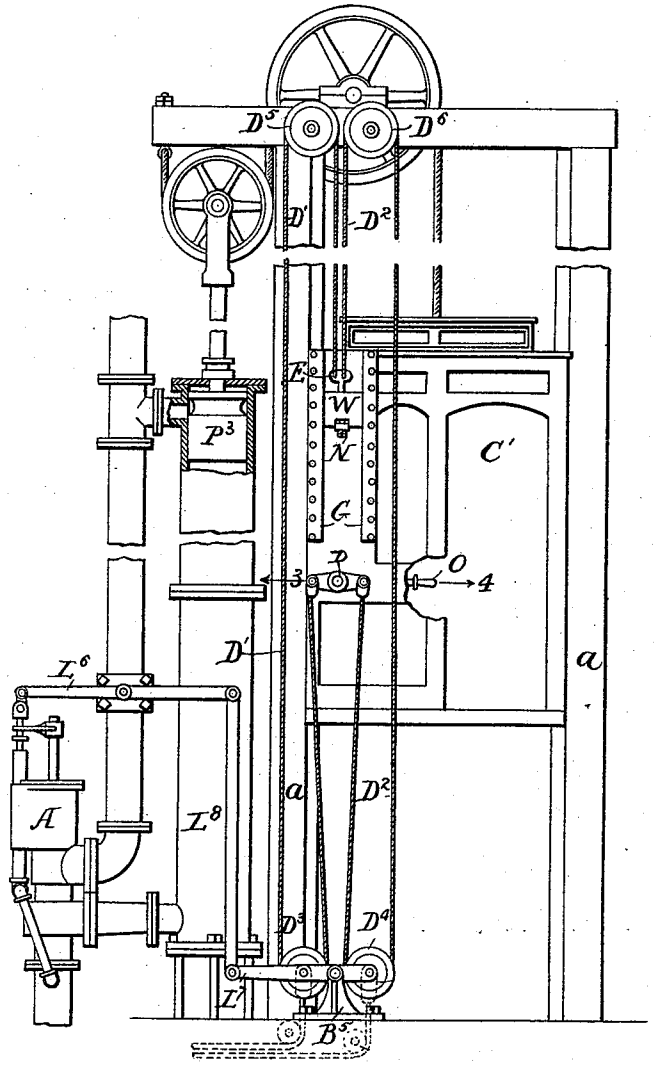

Witnesses
Jno. J. Hinkel
H. S. McArthur

N. C. Bassett
Inventor
By Dyer & Freeman
Attys.

THE NORRIS PETERS CO., PHOTO-LITHO., WASHINGTON, D. C.

(No Model.) 2 Sheets—Sheet 2.

N. C. BASSETT.

ELEVATOR OPERATING MECHANISM.

No. 456,108. Patented July 14, 1891.

Fig. 2.

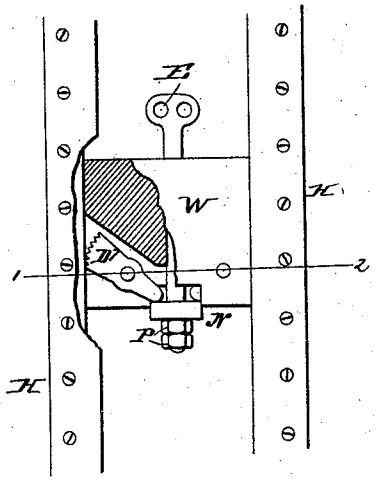

Fig. 5.

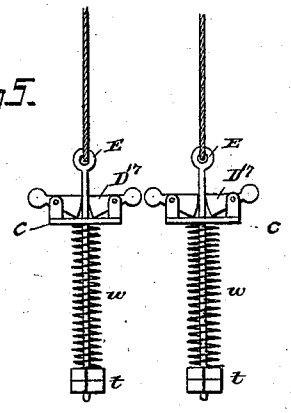

Fig. 3.

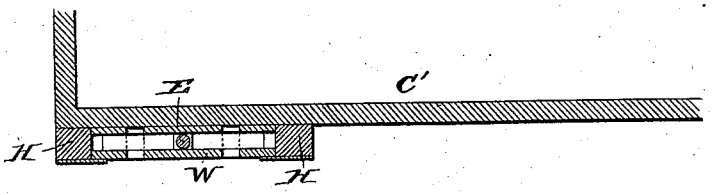

Fig. 4.

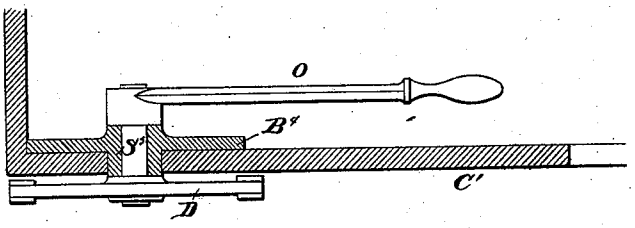

Attests:
John G. Hinkel Jr.
Wm. J. Sayers.

N. C. Bassett
Inventor:
By Foster Freeman
Attys.

THE NORRIS PETERS CO., PHOTO-LITHO., WASHINGTON, D. C.

UNITED STATES PATENT OFFICE.

NORMAN C. BASSETT, OF CHICAGO, ILLINOIS, ASSIGNOR, BY MESNE ASSIGNMENTS, TO THE NATIONAL COMPANY, OF ILLINOIS.

ELEVATOR-OPERATING MECHANISM.

SPECIFICATION forming part of Letters Patent No. 456,108, dated July 14, 1891.

Application filed March 11, 1885. Serial No. 158,462. (No model.)

To all whom it may concern:

Be it known that I, NORMAN C. BASSETT, a citizen of the United States, residing at Chicago, in the county of Cook and State of Illinois, have invented certain new and useful Improvements in Valve-Operating Mechanism for Elevators, of which the following is a specification.

My invention consists of means fully described hereinafter for taking up the slack of and maintaining taut the cable connection between the stopping and starting device of an elevator-engine and the operating device in the cage.

In the drawings, Figure 1 is a side view in part section showing a hydraulic elevator with my improvements. Fig. 2 is an enlarged sectional elevation of the take-up and catch device illustrated in Fig. 1. Fig. 3 is a section on the line 1 2, Fig. 2. Fig. 4 is an enlarged section on the line 3 4, Fig. 1. Fig. 5 is a view illustrating a modification of the take-up device.

The elevator-cage C′ is shown as moving between suitable guides *a a* and connected by flexible suspensories in the ordinary manner with the piston P^3 of a hydraulic elevating-engine, the main valve of which in the construction shown is operated by an auxiliary engine A, and the valve of the latter is controlled from the cage through the medium of a lever L^6 and devices hereinafter set forth. I have illustrated this form of elevating-engine only as one form which may be employed in carrying out my invention. The latter, however, is applicable to elevating-engines of various constructions, and may be employed to operate the main valve directly.

The cage is provided with a suitable bearing B^4 for a spindle S^5, which extends through said bearing to the outside of the cage, where it is provided with a double-armed lever D, and to the inside of the cage, where it is provided with an operating-lever O, and to the ends of the lever D are connected the ends of operating ropes or cables D′ D^2, which pass around pulleys D^3 D^4, carried by a lever L^7, pivoted to a bracket B^5 at the bottom of the well, and also around pulleys D^5 D^6 at the top of the well, the opposite ends being attached to an eyebolt E, which is acted upon by a weight W, or its equivalent, moving between guides H H upon the cage. The lever L^7 is connected through the medium of connecting-bar L^8 with the lever L^6, or in any other suitable manner with the valve-operating appliances and elevator-engine.

The weight W is of such proportions that it will maintain the ropes D′ D^2 taut, taking up any slack or extensions thereof without interfering with the operations of the valve-moving devices, so that the valve is raised or lowered as the operating-lever O is moved in one direction or the other by the attendant in the cage. Thus the lever O is normally in a horizontal position, as shown in Fig. 1, and when its end is raised the pulley D^4 will be lifted and the pulley D^3 is depressed, thereby depressing the outer end of the lever L^7 and lifting the valve, the movement of which is reversed when the end of the lever O is depressed, the weight W during these movements holding the ends of the ropes connected therewith in practically firm connection with the cage with the same effect as if they were directly attached thereto so far as the operation of the valve is concerned; but in case of any extension or slackening of the ropes taking up the slack portion so as to maintain them taut.

To prevent the weight or other take-up device from rising under the tension of the cable-connections I make use of a retaining means, as dogs, cams, or pawls D^7, pivoted to the weight, so as to permit the latter to descend freely, but biting against the guides H to prevent any upward movement of the weight, this biting being insured either by the weight of the dogs or by springs acting thereon or by causing a loose block or shoulder N upon the bolt E to bear against the outer end of each dog, as shown in Fig. 2. The said end is brought to bear upon the shoulder by the downward pressure of the weight. The block N is loose upon the screw-bolt to permit its adjustment by means of nuts P.

Instead of a weight, a spring may be used in such manner as to draw down the screw-bolt E, or there may be two such bolts, each passing through a bracket *c* upon the cage, and provided with a spring *w* and nuts *t*, as

shown in Fig. 5, and dogs D^{17} are hung to ears upon the brackets, so as to permit the descent of the screw-bolts but prevent them from being carried upward. Other means than the lever L^7 may be employed for communicating the motion from the pulleys D^3 D^4 to the operating devices connected with the valve.

My above described improvements may be used in connection with any kind of starting devices—as, for instance, the main or auxiliary valve of a hydraulic elevator or the valve of a steam-elevator or with the shifting or reversing mechanism of an elevator run by belts, and the take-up device for taking up the slack in the cable may be used in connection with elevators where but one cable is employed, and different connections than the arm D and lever O may be used for moving the operating-cables from within the cage and for connecting them with the starting devices, so as to permit two cables to rise or descend simultaneously, traveling with the cage without moving said starting devices.

I do not here claim any features claimed in my Letters Patent Nos. 359,551 and 377,346, dated March 15, 1887, and January 31, 1888, respectively.

Without limiting myself to the precise construction and arrangement of parts shown and described, I claim—

1. The combination, with the cage, engine, stopping and starting device, of a cable-operating lever on the cage, a traveling cable connected at one end to said lever and also to the stopping and starting device, and a take-up constructed to move in one direction only between the other end of the cable and the cage, substantially as described.

2. The combination, with the starting and stopping device and the cable of an elevator, of a take-up device connected with said cable, and a dog or catch arranged to prevent the movement of said device in one direction, substantially as described.

3. The combination, with the starting device, substantially as described, a cage, a double-armed lever D, and pulleys D^3 D^4 D^5 D^6, of cables D' D^2, a weight connected with each cable, guides between which the weight moves, a catch preventing the movement of the weight in one direction, and connections between the lower pulleys and the starting device, substantially as specified.

4. The combination, with the cage, starting and stopping cables, operating-lever, and weight W, of pawls or catches D^7, substantially as specified.

In testimony whereof I have signed my name to this specification in the presence of two subscribing witnesses.

NORMAN C. BASSETT.

Witnesses:

ALFRED E. BARR,

WILLIAM E. MORTIMER.