Sept. 13, 1949. M. G. WHITFIELD 2,481,962

MANUFACTURE OF LAMINATED ARTICLES

Filed Feb. 29, 1944

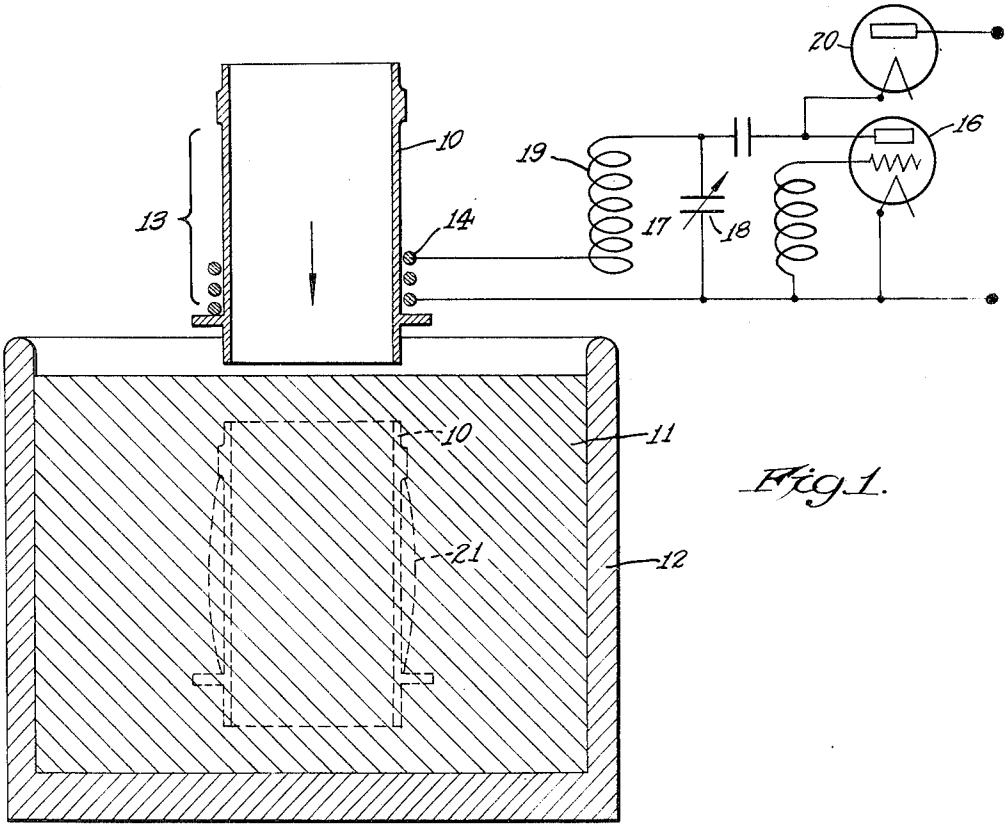

Fig. 1.

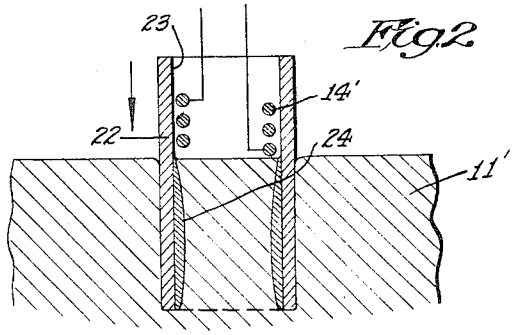

Fig. 2

Fig. 3.

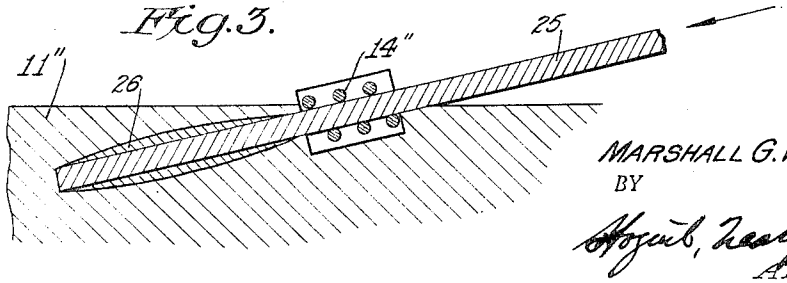

INVENTOR:
MARSHALL G. WHITFIELD
BY
Hoguet, Newton & Campbell
ATTORNEYS

Patented Sept. 13, 1949

2,481,962

UNITED STATES PATENT OFFICE

2,481,962

MANUFACTURE OF LAMINATED ARTICLES

Marshall G. Whitfield, Garden City, N. Y., assignor, by mesne assignments, to Fairchild Engine and Airplane Corporation, New York, N. Y., a corporation of Maryland

Application February 29, 1944, Serial No. 524,395

5 Claims. (Cl. 117—51)

1

This invention relates to the manufacture of laminated articles, and has particular reference to metallic articles having applied thereto a layer of a dissimilar metal which is bonded to the surface of the article by an alloy of the two metals under such conditions that the union is permanent.

It is now known that many metals, when dipped in a bath of a compatible but dissimilar molten metal, alloy with the bath metal at the interface, which provides a substantially permanent bond between the two metals but which in many instances is brittle or otherwise weak or inferior to the physical properties of either or both of the primary metals, so that the composite or laminar article thus formed has limited utility. Accordingly, while it is desirable to provide alloying at the interface in order to obtain the unitary bond, it is equally desirable, and in many instances necessary, to limit the depth or thickness of the alloy in order to obtain a physically strong bi-metallic structure. One way of limiting the alloy thickness is to reduce the time of immersion of the article in the molten bath, and in some instances to quench the article immediately after immersion, but these methods are often difficult to control, particularly in the case of small articles that are quickly heated in the bath and accordingly such methods, while generally satisfactory, are not universally applicable.

In accordance with the present invention, the article to be coated, in the cold state, that is, at room temperature or substantially below the temperature of the molten coating bath, is subjected before immersion to induction heating at high frequency so that the surface of the article to which the dissimilar metal is to be applied is heated to a depth of a few thousandths of an inch, and then the article is immediately immersed in the molten metal bath. Owing to the high temperature of the surface of the article, resulting from the induction heating, instant bonding between it and the molten metal takes place as the result of the alloying action at the interface, but the alloying action is immediately arrested by reason of the cooling of the alloying surface by the mass of cold metal constituting the remainder of the article, and this cooling action also causes the molten metal to freeze on the surface of the article under such conditions that a layer of the bath metal of substantial thickness is obtained.

It will be seen that in accordance with the process of this invention, the necessary alloy bond between the dissimilar metals in order to

2

obtain a unitary bi-metallic structure is precluded from attaining a thickness which would impair the strength of the bi-metallic article, and consequently the method is admirably adapted to the manufacture of articles which are subjected to wide temperature fluctuations, such as steel engine cylinders coated with cooling fin aluminum or other high conducting metal, articles subjected to substantial loads and varying stresses such as machine bearings, and articles formed of or precoated with a metal which tends to dissolve in the molten metal, such as copper or copper-clad articles to be coated with aluminum, silver, tin, and the like.

For a more complete understanding of the invention, reference may be had to the accompanying drawings, in which:

Figure 1 illustrates apparatus for conducting the method of inductively heating a steel engine cylinder barrel preparatory to applying an aluminum cooling fin muff thereto;

Fig. 2 illustrates the method of inductively heating and coating the interior of a tubular member preparatory to forming a bearing thereof; and

Fig. 3 illustrates the method of inductively heating and coating bar stock or a similar elongated solid article according to the method of this invention.

Referring to Fig. 1 of the drawings, numeral 10 designates an engine cylinder barrel as an example of an article which may be coated according to the present invention with an aluminum coating of substantial thickness, which may in itself serve as a heat-conducting medium for dissipating the heat in the cylinder or which may serve as a base for applying a thick wall of aluminum in which cooling fins are cut or formed. The cylinder barrel 10 or other article is first cleaned at the area to be coated to remove such materials as would preclude bonding, although the surface need not be chemically clean. The areas that are not to be coated, i. e., the inside, flange and ends, are preferably painted with a suitable stop-off solution, such as lime, or the like, to prevent bonding at those points.

Prior to immersion in the molten aluminum bath 11 within crucible 12, the area 13 of the barrel 10 to be coated with the aluminum is surface-heated by high frequency induction which may be provided in any suitable way, preferably by passing the barrel 10 downwardly through an insulated helical coil 14, having a diameter slightly larger than the outside diameter of the barrel 10, as shown. Only a few turns

of the helical coil 14 are necessary, since the barrel is moved downwardly through it and is "scanned" by the coil, although the coil 14 may have more or less turns, depending on requirements.

For supplying high frequency electrical energy to the coil 14, an oscillating circuit of any suitable design is provided which, in the embodiment shown, comprises an oscillating space discharge tube 16 having a tank circuit 17 comprising a variable condenser 18 and an inductance 19, said elements being connected to the tube 16 to provide an oscillating circuit of well known character, only so much thereof being shown herein as is necessary to an understanding of the present invention. The inductance 19 is connected in series with the helical coil 14 and forms part of the oscillating circuit. Plate power is supplied to the tube 16 from a suitable source, such as a three-phase power line through a plate transformer, not shown, and through a rectifier tube 20. In order to preclude heating of the barrel 10 at the area 13 to a substantial depth, but rather to limit the depth of heat to several thousandths of an inch, frequencies on the order of megacycles are employed, preferably between about five and about fifteen megacycles, more or less, depending upon requirements.

In operation of the method with the apparatus of Fig. 1, the barrel 10 is placed within the coil 14, located near the surface of bath 11, and moved slowly through coil 14, meanwhile being heated by the eddy currents set up adjacent surface 13 by the field of the coil, whose length may be less than that shown. It will be understood that the major mass of the metal constituting barrel 10 remains at or about room temperature, i. e., "cold," with respect to the temperature of the inductively heated area 13 and the molten bath 11. When the temperature of the area 13 has reached a point 100 to 300° F. above the melting point of the molten bath 11, which, in the case of commercially pure aluminum is about 1220° F., the barrel 10 is immediately immersed in the molten bath 11 as indicated in dotted lines in Fig. 1. Because of the high temperature at the surface 13 resulting from the inductive heating thereof, instant bonding between the aluminum and the steel takes place at that point, accompanied by the formation of a ferro-aluminum alloy, as is described in greater detail in copending application Serial No. 416,328, filed October 24, 1941, now Patent No. 2,396,730, March 19, 1946, by applicant and Victor Sheshunoff.

However, because the temperature of the remainder of the barrel opposite and adjacent to the area 13 is materially lower than the aluminum bath 11, not having been heated prior to immersion therein, the heat is instantly conducted away from the area 13 into the mass of metal constituting the remainder of the barrel, with the result that at the area 13 the temperature drops immediately below the alloying temperature and consequently the alloying action is immediately arrested. Thus, the area 13 is provided with a ferro-aluminum alloy coating at the interface which is extremely thin, on the order of only a few thousandths of an inch.

At the same time, because of the relatively wide temperature gradient between the steel constituting the barrel 10 and the molten aluminum, the aluminum in contact with the alloy layer at area 13 quickly freezes on the barrel to a substantial depth indicated at 21, whereby an exceptionally heavy deposit of aluminum on area

13 is obtained. The barrel 10 is then withdrawn, the whole operation occupying a period of less than one minute, which, however, is variable, depending upon the steel volume of the barrel and the heat-conductivity or composition thereof. In general, the larger the article the longer it may safely remain in the bath, whereas with a smaller article or more highly conducting article, the sooner it must be removed because it heats up more rapidly, and the undesirable alloying action will be resumed in the latter case.

The same procedure may be conducted in connection with tubular steel articles, such as bearing sleeves, that are to be coated on the interior surface with bearing metal such as aluminum or its alloys, or the like. As shown in Fig. 2, the induction coil 14' is positioned close to the surface of the molten bath 11' of aluminum or other coating material, and a steel bearing sleeve or tube 22 is passed slowly over the coil 14' so that the inner surface 23 of the tube 22 lies in the high frequency field of the coil and consequently is heated to a slight depth by the eddy currents induced therein by electrical induction in the manner described. Consequently, when the steel tube 22 is immersed in the molten aluminum bath 11', the instantaneous bond between the aluminum and the steel is formed on the inner surface 23 of the tube 22 but the concurrent alloying action is substantially immediately arrested by reason of the cooling effect of the mass of steel constituting the remainder of the tube 22.

At the same time, the aluminum opposite the alloy on the surface 23 of the tube 22 freezes and forms a layer on the inner surface of the tube 22, which layer is designated 24 in Fig. 2. It will be understood that the ends and outer surface of the tube 22 are coated with suitable stop-off material to preclude coating thereof unless that is expressly desired. In many instances, the layer of aluminum 24 which is thus formed on the inner surface 23 of the tube 22 is of sufficient thickness to serve as the bearing surface and the bearing accordingly requires merely machining for completion.

In view of the normally relatively small volume of steel constituting tube 22, its cooling capacity is less than that of a larger steel article, such as the cylinder barrel 10 of Fig. 1. Consequently, in most instances, the steel tube 22 is allowed to remain in the bath 11' for a matter of seconds in order to preclude resumption of the alloying action, which would take place if the tube 22 were allowed to remain in the bath for a sufficient time to attain the temperature of the bath 11'.

Solid articles, such as bars, rods, or strips of any length, one of which is designated 25 in Fig. 3, may also be treated according to the present invention, either by being passed continuously through a coil, or merely inserted and then withdrawn. Assuming bar 25, which may be ferrous metal, is to be so treated, it is first passed through a high-frequency energized induction coil 14'', so that the surface of the bar 25 is heated by induction as described, to a depth of several thousandths of an inch whereupon the bar is immediately passed into the molten bath 11'', which in this case may also be aluminum. The instantaneous bond between the bar 25, which may be of steel, and the aluminum, takes place, accompanied by the formation of the ferro-aluminum alloy at the interface, in the manner described, which, however, is immediately arrested by reason of the cooling action provided by the mass

of material constituting the remainder of the bar 25. Also, the molten aluminum in contact with the bar 25 freezes thereon to a substantial thickness, as indicated at 26. The time of immersion of the bar 25 in the bath 11' again depends upon the volume and conductivity of the bar, which in turn largely determines the time necessary to heat the bar to the temperature of the bath. In any case, the bar 25 should be removed from the bath before that time in order to preclude the resumption of the alloying action.

Although the invention is admirably adapted to coating ferrous articles with aluminum, the coating material may be aluminum alloys, magnesium, its alloys, or any other dissimilar metal which is chemically compatible with the metal of which the article is made in order that the alloying may be effected. Likewise, the article itself may be of metal other than steel, or it may be a metal-coated article. For example, steel articles coated with copper, tin, silver, or the like, or articles composed of such metals or alloys thereof, or articles other than ferrous articles coated with such metals, may also be treated according to the invention.

It will be observed that the non-ferrous metals just named are those which normally tend to dissolve rapidly in one another or in aluminum in the molten state, with the result that hot dipping is not feasible. However, when such solution is arrested according to the present invention, as soon as the cooling of the interface is effected by the mass of the cool article being coated in the manner described, such coating practice becomes entirely feasible and practical. Thus, special alloy bonding conditions at the interface may be obtained with the present invention, which were not heretofore obtainable by reason of the solution of the surface of the article in the molten coating metal. Likewise, the minimization of the depth of the alloy in cases where the alloy is brittle and otherwise has little physical strength, that is obtainable with the present invention, permits the article to be worked or subjected to rigorous temperature changes without rupture or other impairment of the bond. In the case of aluminum-coated steel articles, this minimization of the depth of the alloy is extremely important in many instances, since the ferro-aluminum alloy is brittle and is otherwise of low physical strength.

To preclude the oxidation of the surface of the article, while it is being heated inductively and before it is immersed in the molten metal bath, the inductive heating may be carried on in a non-oxidizing or reducing atmosphere. For example, in the case of ferrous articles, the heating may be conducted in a hydrogen atmosphere which may be confined within a chamber containing the coil and article or within a suitable hood over the crucible 12, in a manner readily understood.

The depth to which the article to be coated is heated is determined by requirements and the heat capacity of the metal of the article, and may be regulated by adjusting the frequency at the oscillator, but in any case the depth of heating is small compared to the thickness of the article or of the wall thereof opposite the surface to be coated. The article may be heated to the desired depth at a temperature higher than that desired therefor in the bath, and allowed to cool before being immersed in the molten bath, but the time interval between heating and immersion must be short to preclude conduction of the heat from the heated surface to the remainder of the article, so that said remainder may be effective to cool the ensuing bond and thus arrest continuance of the alloy formation or mutual solution, as well as to induce freezing of the molten metal to the surface of the article to be coated.

Although several preferred embodiments of the invention have been illustrated and described herein, it is to be understood that the invention is not limited thereby but is suceptible of changes in form and detail within the scope of the appended claims.

I claim:

1. A method of coating a metal surface article with a compatible dissimilar metal, which comprises introducing that portion of the article to be coated into a high frequency electric field to thereby heat said portion to a temperature at least as high as the melting point of said dissimilar metal and to a predetermined depth substantially less than the thickness of the article at that point while the remainder of the article remains at a temperature substantially lower than said first named temperature, forthwith contacting said dissimilar metal and said heated portion of the article at a temperature inducing mutual solution coaction between the surface metal of the article and said dissimilar metal, the volume and temperature of said remainder of said article in comparison with the volume and temperature of said heated portion of the article being such as to immediately arrest said coaction by cooling said portion by abstraction of heat therefrom and from the molten metal overlying the same by conduction into the said low temperature remainder of the article to thereby provide a layer of said dissimilar metal bonded to said article, and then separating the resulting unitary composite metal-to-metal structure of said article and said dissimilar metal layer from any remaining molten metal.

2. A method of coating a metal surface article with a compatible dissimilar metal, which comprises heating that portion of the article to be coated to a temperature at least as high as the melting point of said dissimilar metal and to a predetermined depth substantially less than the thickness of the article at that point and while the remainder of the article remains at a temperature substantially lower than said first named temperature, forthwith applying said dissimilar metal in a molten state to said heated portion, the volume and temperature of said remainder of said article in comparison with the volume and temperature of said heated portion of the article being such as to immediately arrest said coaction between the surface metal of said article and said molten metal and the molten metal engaging said portion being simultaneously congealed into a layer of substantial thickness by cooling the said portion by conduction of heat therefrom into the said low temperature remainder of the article, and separating said article and congealed layer from said molten dissimilar metal before said remainder of the article is heated to the melting point of said dissimilar metal, whereby said congealed layer of said dissimilar metal remains adhered to said portion of said article.

3. A method of coating a ferrous metal surface article with aluminum-base metal, which comprises heating that portion of the article to be coated to a temperature at least as high as the

melting point of said aluminum-base metal and to a predetermined depth substantially less than the thickness of the article at that point while the remainder of the article remains at a temperature substantially lower than said first named temperature, forthwith immersing said portion of the article in a bath of molten aluminum-base metal to cause an alloying action to take place between said portion and said molten metal, the relation between the volume and said remainder of said article being sufficiently high and the temperature of said remainder being sufficiently low in comparison with the volume and temperature of said portion of said article that the resulting alloying action between said portion and said molten metal is arrested and part of said molten metal on said portion is sumultaneously congealed by cooling said portion by abstraction of heat therefrom by conduction into the said low temperature remainder of the article, and then separating said article and said bath to thereby provide a unitary composite metal-to-metal structure of said article and said aluminum-base metal before said congealed part again becomes molten.

4. A method of coating at least one surface of a tubular ferrous metal article with a compatible dissimilar aluminum-base metal, which comprises introducing that portion of the article including said surface into a high frequency electric induction field, regulating the frequency in the field to limit the resulting eddy current heating of said portion to a depth less than the thickness of the wall of the article including said portion, forthwith contacting said heated surface with said aluminum-base metal in molten state, the relation between the volume and said remainder of said article being sufficiently high and the temperature of said remainder being sufficiently low in comparison with the volume and temperature of said portion of said article that the resulting alloying action between said contacting metals is arrested and the contacting part of said molten metal on said portion is simultaneously congealed by abstraction of heat therefrom by conduction into the said low temperature remainder of the article adjacent said portion, removing said article with the congealed part of said molten metal thereon before said congealed part again becomes molten to thereby provide an article having a coating of said compatible aluminum-base metal bonded on said surface of the tubular article and further cooling the same out of contact with molten metal.

5. A method of coating a metal surface article with an aluminum-base metal, which comprises heating that portion of the article to be coated to a temperature at least as high as the melting point of said aluminum-base metal and to a predetermined depth substantially less than the thickness of the article at that point while the remainder of the article remains at a temperature substantially lower than said first named temperature, maintaining said portion of said article in a reducing atmosphere while so heated, forthwith contacting said aluminum-base metal and said heated portion of the article at a temperature inducing mutual solution coaction between the surface metal of the article and said aluminum-base metal, the relation between the volume of said remainder of said article being sufficiently large and the temperature of said remainder being sufficiently low in comparison with the volume and temperature of said portion of said article that said coaction is arrested by cooling said portion by abstraction of heat therefrom by conduction into the said low temperature remainder of the article, and further cooling the same to thereby provide a unitary composite metal-to-metal structure of said article and said aluminum-base metal.

MARSHALL G. WHITFIELD.

REFERENCES CITED

The following references are of record in the file of this patent:

UNITED STATES PATENTS

Number	Name	Date
1,726,431	Fourment	Aug. 27, 1929
2,135,388	Dellgren	Nov. 1, 1938
2,197,622	Sendzimir	Apr. 16, 1940
2,216,519	Quarnstrom	Oct. 1, 1940
2,235,729	Schon	Mar. 18, 1941
2,237,309	McMinn	Apr. 8, 1941