(No Model.)

T. J. REID.

BALL BEARING.

No. 590,627. Patented Sept. 28, 1897.

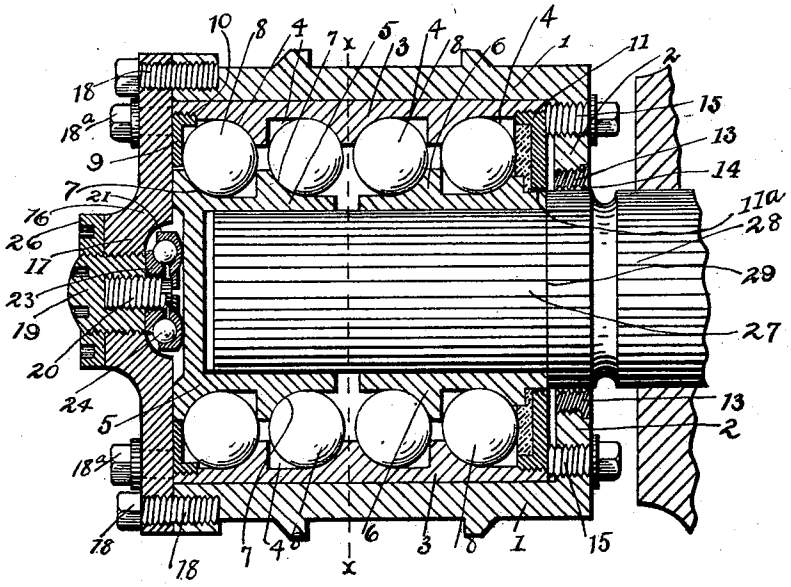

Fig 1

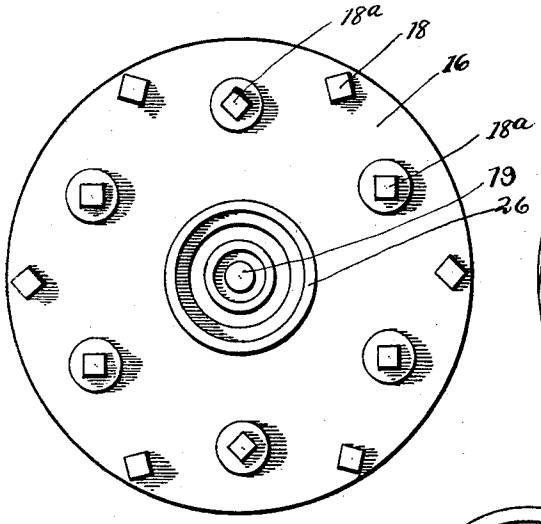

Fig 2

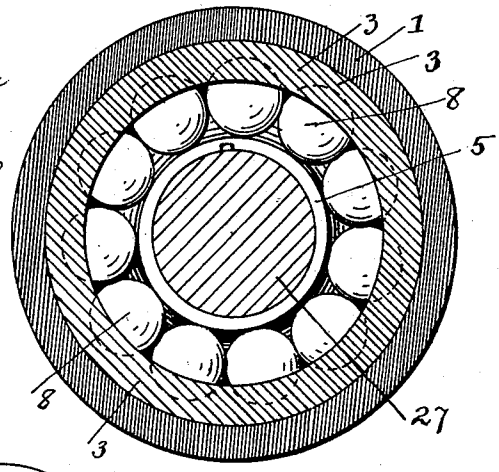

Fig 3

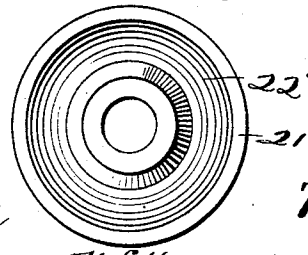

Fig 4

WITNESSES:

Laurence L. Barnard

A. L. Phelps

INVENTOR

Thomas J. Reid

BY

C. C. Shepherd

ATTORNEY

THE NORRIS PETERS CO., PHOTO-LITHO., WASHINGTON, D. C.

UNITED STATES PATENT OFFICE.

THOMAS J. REID, OF WASHINGTON COURT-HOUSE, OHIO.

BALL-BEARING.

SPECIFICATION forming part of Letters Patent No. 590,627, dated September 28, 1897.

Application filed August 14, 1896. Serial No. 602,727. (No model.)

To all whom it may concern:

Be it known that I, THOMAS J. REID, a citizen of the United States, residing at Washington Court-House, in the county of Fayette and State of Ohio, have invented a certain new and useful Improvement in Ball-Bearings, of which the following is a specification.

My invention relates to ball-bearings for car, vehicle, or other journals; and the objects of my invention are to provide an improved construction of adjustable bearings; to so construct and arrange the bearing parts of my device as to admit of the balls being readily removed; to provide improved means for the longitudinal adjustment of the casing; to provide improved means for adjustment of the balls in every direction and for taking up the wear of balls and raceways; to provide an improved outer end cap and to combine therewith improved means for adjusting the sleeve; to provide an improved antifrictional bearing for the outer end of the outer sleeve-section, and to produce other improvements the details of construction of which will be more fully pointed out hereinafter. These objects I accomplish in the manner illustrated in the accompanying drawings, in which—

Figure 1 is a central longitudinal section of my improved boxing. Fig. 2 is a front end view of the same. Fig. 3 is a transverse section on line *x x* of Fig. 1; and Fig. 4 is a face view of the ball-bearing ring or disk, which is combined, as hereinafter described, with the outer end adjusting-screw.

Similar numerals refer to similar parts throughout the several views.

In the construction of my improved boxing I employ an external boxing-case 1, which may be of a cylindrical or other form, said external casing being provided at its inner end with an inturned flange portion 2. Within the boxing-casing 1 I provide an internal cylinder or casing 3, which may have a key, pin, or other similar connection with said external casing to prevent its rotation therein, but which will admit of longitudinal motion. On the inner surface of the casing 3 I form a series of parallel grooves or raceways 4, these raceways being formed with bearing depressions or surfaces, which are on those sides thereof which are toward the center of the length of the boxing. On the inner side of the internal casing 3 I provide a journal or spindle sleeve, which is formed, as indicated in the drawings, of two slightly-separated sleeve-sections 5 and 6, the outer section 5 being substantially cup-shaped, as shown, and having its tubular portion extending inward. Each of these sleeve-sections 5 and 6 has formed in its periphery ball-raceways 7, which are arranged opposite the raceways 4 of the casing 3. Each of these ball-races 7 is as prescribed for the races 4 provided with a ball-bearing surface toward one side thereof, these bearing-surfaces being, however, arranged diagonally opposite those of the casing 3. The races thus formed are designed to have interposed between them suitable bearing-balls 8.

9 represents a gate or retaining-ring, which is provided with an inturned outer flange 10, the latter being threaded on its periphery and having a threaded engagement with the internally-threaded outer end of the casing 3.

11 represents an inner retaining-ring or follower, which corresponds in general form with the ring 9, and the inturned flange portion of which has a threaded engagement with the inner end of the casing 3. The inner surface of this ring 11 may be provided with conveying-threads, as indicated at 11^a. Between the inner circle of balls 8 and the ring 11 I provide a packing-ring of absorbent felt or similar material.

13 represents a bushing-ring, preferably of steel, which has formed on its inner surface conveyer-threads, (indicated at 14,) these threads being so turned as to convey outwardly and thereby resist the entrance of dirt or water.

15 represents set-screws, which at desirable intervals are made to pass through screw-holes formed in the boxing-flange 2, and the inner ends of which are adapted to bear against the inner end of the casing 3 and against the outer portion of the retaining-ring or follower 11.

16 represents the outer end cap of the boxing, which, as indicated in the drawings, is provided with an outwardly-projecting central portion or boss 17 and which has its outer edge portion secured by bolts 18 to the outer

end of the boxing 1. Within the circle of bolts 18 I provide at intervals set-screws 18ª, which pass through threaded holes in the cap and have their inner ends bearing partially against the retaining-ring 9 and partially against the outer end of the casing 3. Into the central threaded opening of the cap 16 is screwed an adjusting and end-thrust screw 19, the inner end of the latter being provided with a threaded socket adapted to receive the threaded stem of an internal adjusting-screw 20. The inwardly-projecting head portion of the screw 20 has mounted loosely thereon the central portion of a ball-bearing ring or disk 21. This ring or disk has formed in its outer face a continuous ball race or groove 22. Between this ball-bearing disk and the inner end of the adjusting-screw 19 and about the screw 20 is arranged a cone bearing-block 23, which has a threaded engagement with the screw 20.

24 represents bearing-balls, which are arranged to bear partially within the cone bearing-surface of the block 23 and partially within the race or groove 22 of the disk 21. As indicated in the drawings, the inner surface of the ring 21 has a bearing against the outer end of the sleeve-section 5. On the outwardly-projecting end portion of the adjusting-screw 19 I provide a locking-nut 26.

27 represents the spindle or journal of the axle 28, the latter being provided with the usual shoulder 29, against which the inner end of the sleeve-section 6 may abut. Although connected with the spindle, the sleeve-sections are permitted a desirable longitudinal movement thereon for the purpose of adjustment in the manner hereinafter described. As a result of this longitudinal movement of the sleeves it is obvious that the section 6 may not at all times be in contact with the shoulder of the axle. It will be observed that the casing 3, sleeves 5 and 6, and retaining-rings 9 and 11 produce an independent ball-cage, which is formed before it is put into the boxing or on the axle-spindle. In order to produce a separation of these parts, the cap 16 is first removed and the cage above described drawn off the axle-spindle and out of the box or external casing at the same time. The retaining-ring 9 is next removed, after which the sleeve-section 5 may be drawn outward, together with the outer circle of balls 8, which results in a dropping of the next circle of balls 8. In the same manner the inner retaining-ring 11 is next removed and the sleeve-sections 6 drawn outward. In assembling the above parts it is obvious that the two inner rows of balls must enter the cage at the point where they were released therefrom.

In operation the external boxing is supported in a suitable manner, while the rotation of the axle spindle or journal and its sleeve results in the latter traveling against the balls 8. The frictional contact between the outer end of the sleeve-section 5 and the bearing disk or ring 21 results in a rotation of said ring about the head of the screw 20 without contact therewith, the head of said screw being so countersunk within said ring as to prevent contact with the sleeve-section. In this operation it is evident that the balls 24 operate as antifrictional bearings. It is evident that an inward and outward or longitudinal adjustment of the casing 3 and sleeve-section 6 may readily be attained by an inward-and-outward movement of the screws 15 and 18ª.

The novel means which I employ for the adjustment of the sleeve-section 5 consists in turning the screw 19 inward or outward, thereby moving the ball-bearing ring 21 to such position as will limit the outward movement of the sleeve-section 5. In thus moving this sleeve-section 5 inward it is obvious that those balls 8 which are in front of the central dotted line $x\,x$ (shown in Fig. 1) will be adjusted diagonally upward and inward and the balls back of it downward and inward, and all simultaneously adjusted by the same movement. In this connection it will be observed that all the adjustments of the balls 8 or the bearing-surfaces of their raceways are toward the center of the boxing.

It is obvious that the various adjusting-screws may be employed separately or in such combinations as may be found necessary. The entire construction within the box forms an independent cage that may be removed in whole from the box and axle when the box-cap is removed and when other retaining parts are detached from the cage, thus admitting of the balls and raceways being cleaned or new parts substituted for defective ones.

Owing to the fact that the hard-metal bushing-ring 13 is provided with the internal thread 14 means are provided for the rejection of dirt or water, while comparatively little, if any, oil can escape from the box.

It is obvious that the central screw 19, its ball-bearing inner end attachment, and set-screws 18 will receive the end thrust, thereby greatly reducing the friction which might otherwise be caused.

From the construction and operation herein shown and described it is obvious that a simple, durable, and effective ball-bearing construction is provided which will be of great utility not only on cars, but on other constructions which employ a rotating journal shaft or axle.

Having now fully described my invention, what I claim, and desire to secure by Letters Patent, is—

1. In a ball-bearing journal-box the combination with the external boxing-case, an internal casing therein, raceways in said internal casing, a spindle, a sleeve surrounding said spindle and ball-races in said sleeve, of a cap-plate 16 on the outer end of said boxing, a central adjusting-screw 19 threaded therein, a screw 20 threaded in said screw 19, a cone bearing-ring about said screw 20, a

bearing-disk 21 and balls 24 between said disk and bearing-ring, said disk having a contact with the outer end of said sleeve, substantially as and for the purpose specified.

2. In a ball-bearing journal-box the combination with an external casing, an internal casing having raceways therein, a sleeve, and raceways in said sleeve and balls in said raceways, of an outer end cap 16, rings 9 and 11 connected with the end portions of said internal casing and set-screws 18^a and 15 having an adjustable bearing against said rings 9 and 11 and against the ends of said internal casing, substantially as and for the purpose specified.

3. In a ball-bearing journal-box the combination with the external casing, an internal casing connected therewith, said internal casing having ball-raceways formed at intervals therein, of a sleeve having ball-raceways in its periphery, said casing and sleeve-raceways having ball-bearing surfaces arranged diagonally opposite each other, balls within said raceways, and retaining-rings having as described threaded engagements with the ends of the ball-cage, substantially as and for the purpose specified.

4. In a ball-bearing journal-box the combination with the external casing 1, inner casing 3 and ball-races in said inner casing, ball-bearing surfaces in said races on those sides thereof which are toward the center of the length of the boxing, of separated sleeve-sections 5 and 6, ball-bearing races therein, bearing-surfaces in said races diagonally opposite the bearing-surfaces in said inner casing, retaining-rings detachably connected with the ends of the internal casing, a cap on the outer end of the boxing and set-screws adjustably supported in said cap and the inner end of the boxing, said set-screws having their inner ends bearing against said retaining-rings, substantially as and for the purpose specified.

THOMAS J. REID.

In presence of—
A. L. PHELPS,
J. L. DAREN.