March 13, 1934. M. F. PARKER 1,951,107

OIL CAN

Filed Nov. 21, 1931

Fig. 1.

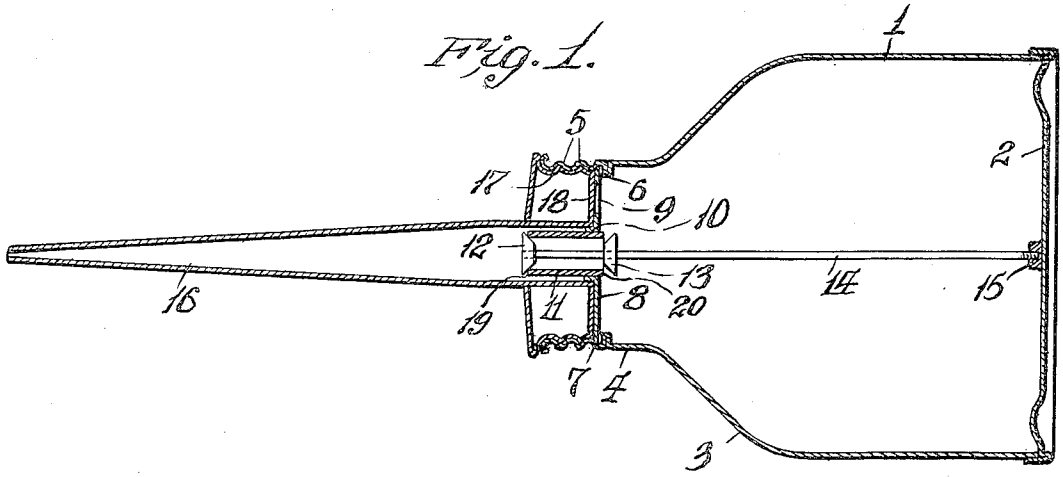

Fig. 2.

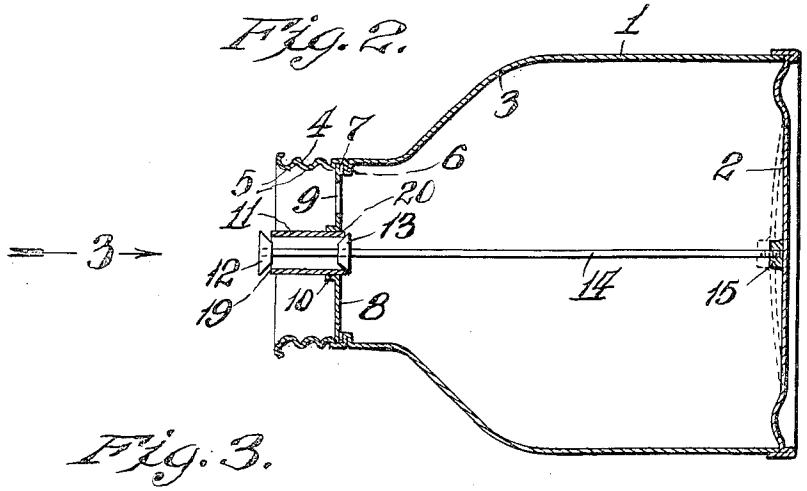

Fig. 3.

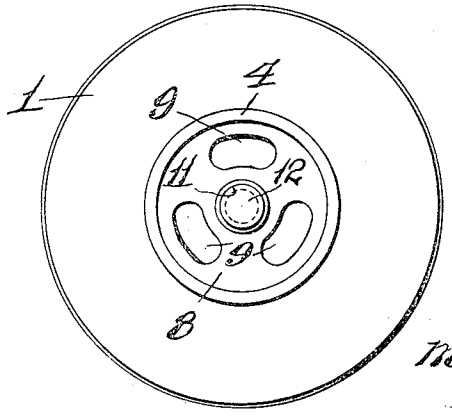

Inventor:
Marion F. Parker:
By H. G. Fletcher
atty.

Patented Mar. 13, 1934 1,951,107

UNITED STATES PATENT OFFICE

1,951,107

OIL CAN

Marion F. Parker, St. Louis County, Mo.

Application November 21, 1931, Serial No. 576,513

3 Claims. (Cl. 221—43)

This invention relates to an improvement in oil cans and has for its primary object to provide the can with improved means for preventing leakage of oil therefrom when the can is accidentally disposed in an inverted or laying down position.

Another object of the invention is in providing the oil can with improved means for discharging oil into the spout.

A further object of the invention is in providing the oil can with means for the discharge of regulated quantities of oil therefrom.

A still further object of the invention is in providing the oil can with valve means in or adjacent the spout of the can which is actuated by means extended to the diaphragm bottom of the can.

Other and further objects will appear in the specification and be specifically pointed out in the appended claims, reference being had to the accompanying drawing, exemplifying the invention, and in which:—

Figure 1 is a longitudinal vertical section taken through an oil can showing the improvements of this invention applied thereto, the oil can being shown in a horizontal position.

Figure 2 is a view similar to Fig. 1 with the discharge spout of the can removed.

Figure 3 is an end view of Fig. 2 taken in the direction of the arrow 3 in Fig. 2.

Referring by numerals to the accompanying drawing, 1 designates an oil can having the diaphragm bottom 2, the opposite end of said can having a shoulder 3 which terminates into a neck 4, said neck having the threads 5 formed thereon. An annular seat 6 is formed or located on the inner end of the neck 4 adjacent the shoulder 3 of the can and engaged on said shoulder against a packing 7 is a wall 8 having a plurality of elongated apertures 9 formed therein.

Concentrically formed in the wall 8 is an opening 10 and secured in said opening in a seal tight manner is a tube 11 which extends into the neck 4 of the can.

For cooperation with the tube 11 is a pair of valves 12 and 13, said valves being securely fixed to a rod 14 which has one end extending into the tube and the other end extending to the bottom 2 of the can and is secured to the can bottom on its inner surface by soldering or other suitable means as shown at 15.

A discharge spout 16 having a threaded base 17 is threadingly engaged in the neck 4, said base 17 having a seating end 18 which engages against the wall 8 and serves as a closure for the apertures 9 of said partition when the spout 16 is properly fixed to the neck 4 of the can.

The valve 12 is engaged on the rod 14 outwardly of the tube 11 for cooperation wtih the outer end 19 of the tube, the valve 13 being secured on the rod 14 inwardly of the tube 11 for cooperation with the inner end 20 of said tube and, when the bottom 2 of the can is flexed, the rod 14 is reciprocated by the flexing action of the can bottom for actuating the valves 12 and 13 for seating or unseating them with respect to the ends of the tube 11 with which they are cooperable.

In the use of an oil can having the unique construction as aforedescribed, the normal position of the valves 12 and 13 with respect to the tube 11 is as shown in Fig. 1 in which the valve 12 is in seating engagement with the outer end of the tube and the valve 13 is unseated from the inner end of the tube. This seated position of the valve 12 with the tube 11 will seal the can against leakage in the event that the can is reposing in an overturned position as the normal outwardly flexed position of the diaphragm bottom 2 of the can will cause the rod 14 to hold the valve 12 in seated position against the tube 11.

In the use of the can during oiling, obviously as the valve 13 is normally away from the inner end of the tube 11, the oil in the can will have access to the tube 11 particularly when the oil can is held in an inclined position; therefore when the diaphragm bottom 2 is pressed inwardly by the thumb of the operator, the rod 14 carrying the valves 12 and 13 will be inwardly moved and as the valve 13 is moved into seating position with the inner end of the tube 11, the valve 12 is simultaneously unseated from the outer end of the tube as shown in Fig. 2, the inward movement of the valve 13 with respect to the tube forcing the oil charge contained in the tube outwardly therefrom into the spout 16 from where it is discharged. The release of pressure from the bottom 2 by the operator will cause a withdrawing action on the rod 14 thereby simultaneously seating the valve 12 on the outer end of the tube 11 and simultaneously unseating the valve 13 from the inner end of the tube so that the tube 11 will automatically become filled with another oil charge.

The tube 11 and the cooperation of the valves 12 and 13 therewith in the manner described provides for regulated quantities of oil to be discharged into the spout 16 as it is obvious that the amount of discharge from the tube can only be that of the amount entered into the tube as the valve 13 automatically cuts off further entry of

oil from the can during the forcing and cutting off operation of the valve 13 with respect to the tube.

For filling the oil can, the discharge spout is removed from the neck 4 of the can 1 and the oil upon being poured into the neck, will enter the can through the apertures 9 provided in the wall 8. When the can is filled, the threaded base 17 of the spout 16 when engaged in the neck 4 will seal the apertures 9 by the seating end 18 of the base 17 of the spout being tightly engaged against the partition 8.

Obviously constructional modifications of the device are possible without departing from the spirit of the present invention and therefore it is to be understood that it is not necessary to limit the invention by the terms used in the foregoing description, excepting such as the state of the art may require.

What I claim is:—

1. A liquid dispenser comprising a container having a neck, a wall in said neck having apertures therein, a removable discharge spout secured to said neck having a part for closing the apertures of said wall, a tube concentrically disposed in said wall, and a discharge valve cooperable with said tube.

2. A liquid dispenser comprising a container having a neck, an apertured wall in said neck, a discharge spout extending from said neck, a tube secured to and extending from said apertured wall into said spout, a diaphragm wall, a member secured to said diaphragm wall extending into said tube, and a valve cooperable with respective ends of said tube secured to said member.

3. A liquid dispenser comprising a container having a neck and a discharge spout, a tube extending from the container into said spout, a supporting member having openings therein located in said neck, said tube being secured to said supporting member, a pair of valves each being cooperable with a respective end of said tube, and a rod to which said valves are secured extending to one of the walls of the container.

MARION F. PARKER.