June 26, 1928. 1,674,804

J. C. STEARNS

CONNECTING PLUG

Filed Nov. 16, 1925

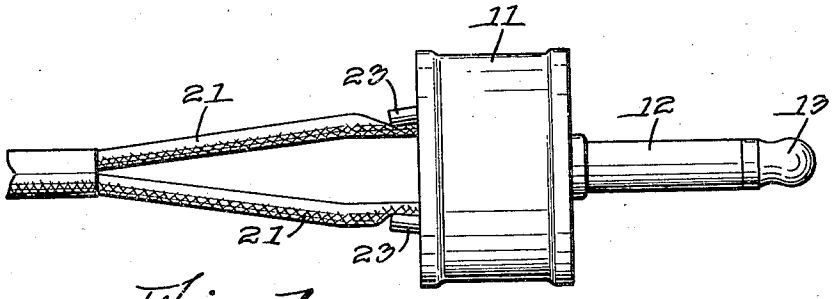

Fig. 1

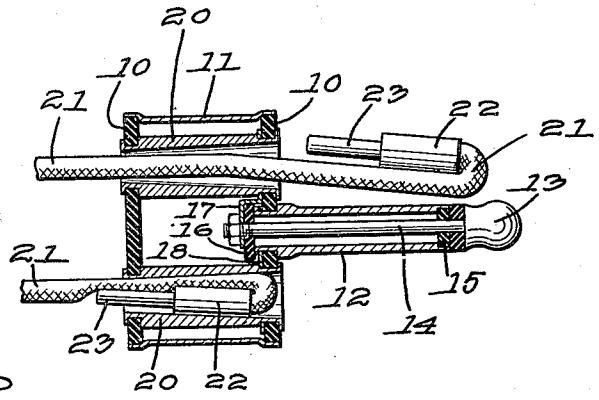

Fig. 2.

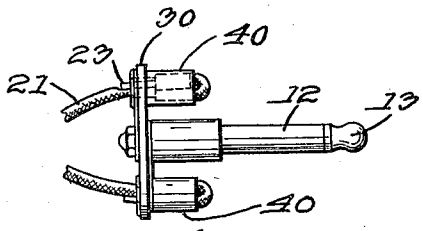

Fig. 4.

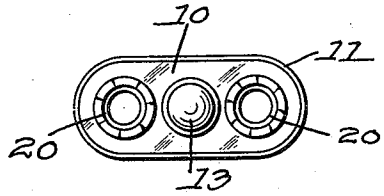

Fig. 3.

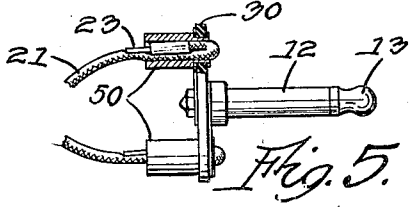

Fig. 5.

Inventor
Jason C. Stearns
By Attorneys
Southgate Fay & Hanby.

Patented June 26, 1928. 1,674,804

UNITED STATES PATENT OFFICE.

JASON C. STEARNS, OF WORCESTER, MASSACHUSETTS.

CONNECTING PLUG.

Application filed November 16, 1925. Serial No. 69,362.

This invention relates to an electric connecting plug for radio or telephone work and other purposes. The invention relates largely to the way of connecting the leading in wires with the plug. The principal object of the invention is to provide a very simple means for connecting the contacting end or terminal pieces of the leading in wires with the plug so as to secure a firm contact which will be sure to conduct electricity and which will be put into place with a rubbing electrical contact; also to add to the simplicity of the construction.

Other objects and advantages of the invention will appear hereinafter.

Reference is to be had to the drawings in which

Fig. 1 is a side view of a preferred form of connecting plug made according to this invention and shown in operative condition;

Fig. 2 is a sectional view of the same with one of the terminals in place and the other just ready to be put into position;

Fig. 3 is an end view;

Fig. 4 is a side view of a simpler form of the invention, and

Fig. 5 is a similar view, partly in section of another form.

So far as I know, the ordinary method of securing electrical contact between the hole in the plug and the terminal piece is to make these both cylindrical and fitting each other. In this way after the terminal has been used a long time, looseness develops so that the contact is poor and the terminal is easily disconnected. By my invention no amount of wear will reduce the efficiency of the electrical contact or the efficiency of the mechanical connection. The device is very simple and the wear comes at varying places so that it is widely distributed. The electrical contact is perfect and the parts are of such a nature that the terminal cannot be pulled out directly by the operator and therefore the tendency of the lead wires to break is practically eliminated.

Referring to the drawings, it will be seen that I have provided an electrical connection involving a body made up of two insulating discs 10 which can conveniently be of the shape indicated in Fig. 3 and a surrounding wall 11 which may be of metal or insulating material as desired. The wall 11 is recessed to receive the edges of the discs 10. One of these discs 10 is centrally perforated and through it passes a tubular metallic contact pin 12 held in position by a metallic head 13 and central rod 14 which has a nut on the inner end inside the body 10—11. The head 13 and shank 14 are separated and insulated from the hollow pin 12 by an insulating collar 15 which surrounds the rod and separates the end of the pin from the head. This has a reduced neck to fit into a recess in the inside of the end of the contact pin 12 so as to hold the parts at that end.

At the other end, there is an insulating washer 16 extending over the inner end of the pin 12 and the nut bears on that indirectly, as will appear, to hold these parts together. The rod 14 is provided with a rigid electrical contact 17 which surrounds the rod and comes under the nut and projects outwardly at one side so that it is in firm electrical contact with the rod and constitutes one of the terminals or connectors. The other contact 18 is secured to the pin 12 under a shoulder at the end and projects outwardly at the other side. These two contacts 17—18 are both of metal, preferably sheet brass, and they are both rigid and very simple to construct and assemble. Each one has a circular perforated end extending outwardly from it through which extends a brass or other conducting tube 20. These two tubes are flanged over on their ends and pass through and are held in perforations near the ends of the two discs 10. They thus serve to hold the two discs firmly together. They are made preferably cylindrical outside but conical inside.

This constitutes the plug or connector. The lead wires 21 are each provided with a metal terminal piece 22 of well known form but they can be made of smaller size than usual. In order to apply them, each one is put through one of the tubes 20 and then the lead wire is bent over on itself so as to bring the terminal piece back parallel with

it as shown at the top in Fig. 2. Then the end of this is inserted in the large end of the conical passage through the tube 20 and pulled part way through as shown at the bottom of Fig. 2.

The lead wire is provided with a soft insulation as usual. Therefore when it is drawn in as shown at the bottom of Fig. 2 the terminal piece is forced against the slightly conical surface of the tube as shown and forms a connection all along its surface at one side which constitutes a perfect electrical contact. By drawing the terminal in in this way, this contact is completed with a rubbing action which insures intimate engagement of the two metallic surfaces. As it is wedged in it will not come out accidentally. As the position of the terminal piece 22 in the tube 20 depends on the way in which the operator bends over the lead wire as shown at the top of Fig. 2, the terminal piece will come into contact with various parts of the inside surface of the tube 20 at different times and therefore it is capable of practically indefinite use without much wear at any one point. It is wedged in by the soft and yielding surface of the lead wire just as well after use as it is at first.

To remove the terminal piece, even when it is pushed in hard, it is usually necessary only to push on the lead wire grasping it at a point close to the plug, but I have made the ends 23 of the terminal pieces long enough so that they extend all the way through and beyond the plug 20 the operator can push on them to release the lead in wires.

This construction avoids the tendency to injure the lead-in-wires at a point just at the end of the terminal piece and avoids the breaking of the lead wires by pulling directly on them. It also avoids the use of all springs for the contacts 17 and 18 so that all parts within the plug are firm and rigid at all times. The outside parts of the plug are connected together in a very simple and complete way by the heading over of the two tubes 20 and the whole device is simple, durable and easy to manufacture and it is also convenient for the operator to use.

In Fig. 4 the same principles are used but there is only one disc 30 and a pair of tubes 40 are supported by it alone. In Fig. 5 two tubes 50 are supported on the other side of the disc 30. The disc may be of the same shape as the disc 10 in Fig. 3. The passage through the tube is not tapering in Fig 4.

Although I have illustrated and described only three forms of the invention, I am aware of the fact that other modifications can be made therein by any person skilled in the art without departing from the scope of the invention as expressed in the claims. Therefore, I do not wish to be limited to all the details of construction herein shown and described, but what I claim is:—

1. In an electric connecting plug, the combination with a main body and a contact pin projecting therefrom and having two conducting parts provided with two contacts of rigid construction, with a tube extending through the plug having a passage therethrough and connected with one of said contacts, a lead wire, and a terminal piece therefor each having a materially smaller diameter than the passage through the tube, said terminal adapted to be bent over and inserted, with the lead wire, in the passage in the tube.

2. In an electric connecting plug, the combination with a tubular pin, a rod inside it insulated from it, and contacts connected therewith, of a conducting tube having a tapering passage through it in electrical connection with one of said contacts, a lead wire and a terminal piece therefor, the passage through the tube being large enough to receive the terminal piece and the lead wire in addition.

3. The combination with an electric connecting plug having a passage therethrough of a lead wire having a metal terminal piece, the passage being of such size as to receive the terminal piece with the lead wire alongside.

4. In an electric connecting plug, the combination with a casing comprising a pair of insulating discs at each end and a wall all around the plug connecting said discs, of a pair of tubes extending through from one disc to the other and arranged to hold the two discs together, said tubes each having a tapering passage extending longitudinally therethrough, a tubular contact pin connected with one tube, a rod inside and a head on the rod connected with the other tube, and a lead wire having a metallic terminal piece of such size as to be received in either tube with the lead wire parallel to and in contact with one side of the terminal piece.

5. In an electric connecting plug, the combination with a casing, of a pair of tubes extending through it each having a tapering passage extending longitudinally therethrough, a lead wire having a metallic terminal piece of such size as to be received in either tube with the lead wire parallel to and in contact with one side of the terminal piece, said terminal piece having a smaller metallic tip on the end of sufficient length to extend out through the smaller end of the passage through the tube when in position so that it can be used for disengaging the terminal piece from the plug.

6. In an electric connecting plug, the combination with a casing comprising a pair of insulating discs at each end and a wall all around the plug connecting said discs, of a pair of tubes extending through from one

disc to the other and arranged to hold the two discs together, said tubes each having a tapering passage extending longitudinally therethrough, a tubular contact pin connected with one tube, a rod inside, a head on the rod connected with the other tube, a lead wire having a metallic terminal piece of such size as to be received in either tube with the lead wire parallel to and in contact with one side of the terminal piece, said terminal piece having a smaller metallic tip on the end of sufficient length to extend out through the smaller end of the passage through the tube when in position so that it can be used for disengaging the terminal piece from the plug.

In testimony whereof I have hereunto affixed my signature.

JASON C. STEARNS.