Nov. 19, 1946. W. R. LE PAGE 2,411,440

LIGHT SOURCE FEEDBACK SYSTEM

Filed April 30, 1943

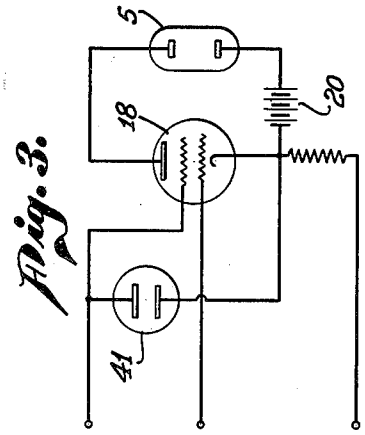

Fig. 3.

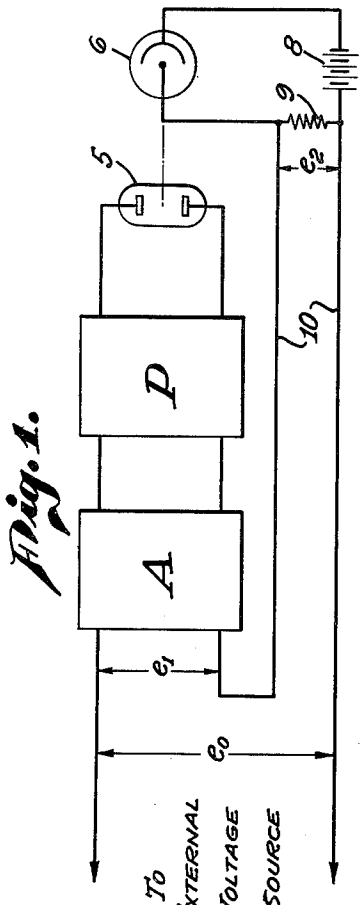

Fig. 1.

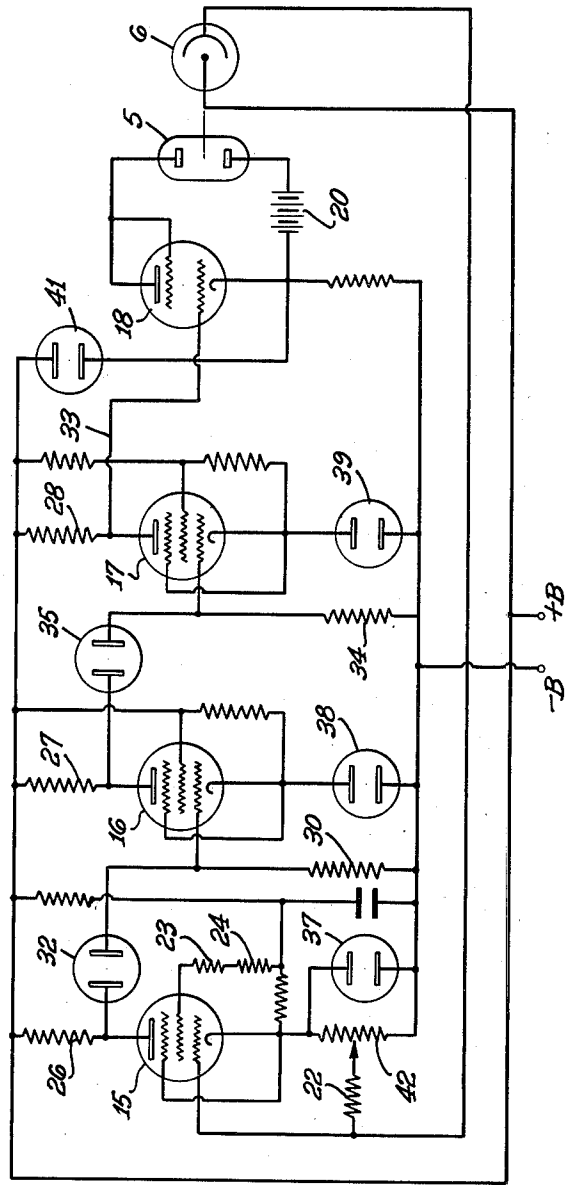

Fig. 2.

WILBUR R. LE PAGE,
INVENTOR.

BY Carl R. Gosnew

ATTORNEY.

Patented Nov. 19, 1946

2,411,440

UNITED STATES PATENT OFFICE

2,411,440

LIGHT SOURCE FEED-BACK SYSTEM

Wilbur R. Le Page, Pikesville, Md., assignor to Radio Corporation of America, a corporation of Delaware

Application April 30, 1943, Serial No. 485,255

5 Claims. (Cl. 250—41.5)

1

This invention relates to photographic sound recording and reproducing systems, and particularly to a system for stabilizing the light sources used in such systems or any system in which the light output should vary linearly with an applied signal, voltage or current which may consist of oscillations of audio frequencies and unidirectional components.

It is well known that in photographic sound recording systems, light sources or lamps are employed to produce light beams which may be either directly modulated by varying the energy supplied to the lamps in accordance with the variations of sound waves to be recorded, or which may be modulated by vibrating the beam in accordance with the sound waves. Light sources of constant intensity are used for recording both variable area and variable density sound tracks, the light being modulated by the vibrations of a galvanometer mirror. Light sources, such as glow lamps, which vary in intensity are also employed for recording variable density records. For reproducing either type of record, a light source of constant intensity is used to produce the scanning beam.

When a light of constant intensity is employed for recording, it is necessary that it be maintained accurately constantly to prevent undesired variations in the sound levels or modulations and the introduction of distortion in the recorded or reproduced sound. Unwanted light variations may be produced by fluctuations in the lamp energizing source, by deterioration of the light-producing elements, by the blackening of the lamp envelope and other reasons. When the recording is done by causing a variation of the light source, this variation must be linear with the applied signal, voltage or current, and the linearity must be maintained for frequencies up to the highest frequency of sound to be recorded while the average light remains constant or at a controllable value. That is, the light must follow an average value which is determined by the noise reduction voltage and also the sound signal frequencies and thus linearly respond to voltage or current of any frequency in the band to be recorded and a direct current or voltage. The invention further provides a feedback system which requires very little light to produce the necessary stabilization, modulation, and control.

The present invention, therefore, is directed to a system for stabilizing and providing linearity of light variation with an applied alternating and direct current signal. This is accomplished by detecting a portion of the light and regulating the

2

energy supplied to the lamp in accordance with the variations in the detected light for stabilization, and in accordance with an applied signal for modulation and ground noise reduction. The general principle of such an optical feedback stabilizing system is known in the art. In certain of these prior systems which provide both direct current and alternating current feedback, the impedance of an electronic device connected in series with the lamp and the primary power source is varied in accordance with the light fluctuations. The amount of feedback in such a system depends on the gain of the amplifier, the efficiency of translation of the light sensitive device and the amount of light collected for control purposes. For a fixed amount of amplification and a fixed amount of light received by the photocell, the feedback can only be increased by increasing the cell load resistance, or for a fixed number of stages of amplification, the feedback may be increased by increasing the interstage coupling resistors. However, these methods of increasing feedback have the disadvantage of causing phase shift and loss of gain at high frequencies.

The principal object of the invention, therefore, is to improve light source stabilizing, modulating, and controlling systems.

Another object of the invention is to provide an optical feedback stabilizing, modulating, and controlling system which has minimum distortion and a high sensitivity to the controlling light, making it unnecessary to appreciably reduce the useful light, to obtain sufficient control light.

A further object of the invention is to provide an optical feedback system which is capable of responding to rapid changes in light output, as well as to slow variations therein.

Although the novel features which are believed to be characteristic of this invention are pointed out with particularity in the claims appended hereto, the manner of its organization and the mode of its operation will be better understood by referring to the following description, read in conjunction with the accompanying drawing, in which:

Fig. 1 is a block diagram showing the general arrangement of the system embodying the invention.

Fig. 2 is a schematic diagram of the feedback amplifier of the invention, and

Fig. 3 is a schematic detail diagram of a modification of the last stage of the system shown of Fig. 2.

Referring now to Fig. 1, block A is an amplifier

which is capable of amplifying both direct current and alternating current, and P is a power supply and other circuit elements necessary for controlling a glow lamp 5 upon which the output of the unit P is impressed. A portion of the light from lamp 5 is detected by a photosensitive device 6 energized by battery 8. The energization of the cell 6 generates a voltage across a load resistor 9, which voltage is indicated as e_2. The voltage across load resistor 9 is impressed over conductors 10 upon the input of amplifier A in series with an external voltage which may be considered as e_0, the total voltage thus appearing across the input to amplifier A being e_1. The phase of the voltage e_2 is such as to decrease the energizing lamp current with an increase in light output.

The entire system just described can be considered as a feedback amplifier with 100 per cent feedback. Without feedback, the gain G of the amplifier may be considered as e_2/e_1. It is evident that e_2 is considered the output voltage, in order to deal with the circuit as an amplifier. Actually, the light is the useful output, but since the light is proportional to e_2 the discussion is valid. Thus, in the usual notation in which the feedback factor β equals (-1), the well known formula $G/(1-G\beta)=G/(1+G)$ for the gain of a feedback amplifier applies in this case. If G is large, the gain is nearly unity, and this is the condition desired. In this analysis the numerical value of the overall gain is based on the assumption that $\beta=1$. Now, the optimum condition of operation is that the value of G be sufficiently large so that the net gain is very nearly equal to unity.

In a single stage feedback system, the amount of feedback is limited by the size of the photocell and amplifier load resistors and any increase therein increases the effects of stray capacity with the associated difficulties. Of particular concern in this application is the resulting phase shift at the higher frequencies, which may contribute to a tendency to oscillate. This phase shift disadvantage may be more acute with the use of a glow lamp since the light modulation lags the current modulation by a considerable angle at high audio frequencies.

The present invention overcomes the above difficulties by the use of more stages of amplification in combination with low coupling resistances and a low photocell load resistance. Referring now to Fig. 2, four stages 15, 16, 17, and 18, of amplification are shown, the first three tubes 15, 16, and 17 being comparable to amplifier A of Fig. 1, and tube 18 being comparable to power unit P of Fig. 1. The three tubes 15, 16, and 17 may be amplifier tubes, such as the RCA type 6J7, while tube 18 may be of the RCA type 6L6. The lamp 5 of Fig. 1 is shown connected in the plate circuit of tube 18, energy for the lamp and tube being supplied by a battery 20. The photoelectric cell 6 of Fig. 1 is shown connected back to a low value load resistor 22 in the input of tube 15.

The external voltage represented by E_0 in Fig. 1 may be impressed across either resistors 23 or 24, one of which may be used for introducing a modulating signal voltage and the other for introducing a noise reduction voltage. A potentiometer 42 is an intensity control for the lamp 5 which may also be obtained, if desired, by a voltage applied across either resistor 23 or resistor 24. A common source of B potential is supplied to the plates of tubes 15, 16, and 17 over resistors 26, 27, and 28. The effective plate loading resistance of tubes 15 and 16 is produced by resistor 26 and resistor 30 in parallel for tube 15 and by resistors 27 and 34 in parallel for tube 16. The constant voltage drops across gas-filled voltage regulator tubes 32 and 35 produce the proper biases on the tubes 15 and 16, respectively, and effectively provide a direct coupling between tubes 15 and 16 and between tubes 16 and 17, a direct connection 33 being provided between tubes 17 and 18. Regulator lamps 37, 38 and 39 are for the purpose of obtaining a negative bias on the grids of the respective tubes, while lamp 41 regulates the bias potential on tube 18.

Since a sustaining current of about 5 mils is necessary in the glow tube, the coupling resistors cannot be very large, and this is particularly desirable in order to provide the low coupling between the amplifying stages. The above-mentioned circuit operated satisfactorily to provide a flat frequency response characteristic up to 10,000 cycles per second with negligible distortion. To obtain 20 db. of feedback with resistor 22 having the small value of 10,000 ohms, only one microampere of photocell current is necessary for each ten milliamperes of lamp current. More photocell current, (i. e. more detected light) will give more feedback. The system may thus supply a considerable amount of feedback with a very feeble photocell current, and therefore has a high sensitivity to detected light. The modulating signal and noise reduction voltages may also be introduced in the control grid circuit of tube 15 instead of across resistors 23 and 24 as mentioned above.

In Fig. 3, an alternate method of connecting the 6L6 into the circuit is shown, a method in which the screen grid of the tube is separately utilized. The same low coupling resistances between tubes is obtained wherein the amount of feedback is more nearly constant as a function of frequency.

I claim as my invention:

1. A feedback amplifier system for stabilizing a light source comprising a photocell, a potential source for said photocell, an input stage of amplification having its input connected to said photocell, a light source to be controlled, an output stage of amplification having its output connected to said light source, coupling means between said amplifying stages, said coupling means having a low value of resistance, and coupling means intermediate said photocell and said input stage of amplification, said last mentioned coupling means including a resistor in series with said photocell and said potential source, said resistor having a resistance value of the order of 10,000 ohms, said low value of resistance minimizing phase shift and loss of gain at high frequencies.

2. A feedback amplifier system for stabilizing a light source comprising a photocell, an input stage of amplification having its input circuit connected to said photocell, a coupling resistor in said input circuit, a light source to be controlled, an output stage of amplification having its output connected to said light source, coupling means between said amplifying stages, said coupling means having a low value of resistance, a polarizing source of voltage for said photocell and the anodes of the tubes in said amplifying stages, and a degenerative feedback series circuit from said polarizing source of voltage through said photocell through said coupling resistor and back to said polarizing source for cou-

pling said photocell to said input stage of amplification.

3. A feedback amplifier system for stabilizing a light source comprising a photocell, an input stage of amplification having its input circuit connected to said photocell, a coupling resistor in said input circuit, a light source to be controlled, an output stage of amplification having its output connected to said light source, coupling means between said amplifying stages, said coupling means having a low value of resistance, a polarizing source of voltage for said photocell and the anodes of the tubes in said amplifying stages, and a series circuit from said polarizing source of voltage through said photocell through said coupling resistor and back to said polarizing source for coupling said photocell to said input stage of amplification, the value of said coupling resistor being of the order of 10,000 ohms.

4. A feedback amplifier system for stabilizing a light source comprising a light source to be stabilized, a photoelectric cell for detecting a portion of the light from said source, a plural stage amplifier including at least three stages intermediate said photocell and said light source, glow lamp coupling means between said amplifying stages, a high potential source for said photocell and the anodes of the tubes in said amplifier stages, said coupling means having a low value of resistance, and coupling means between said photocell and said first stage of amplification, said last-mentioned coupling means including a resistor in series with said high potential source and said photocell to provide a degenerative feedback circuit, the variations in voltage across said resistor being amplified by said amplifier stages.

5. A feedback amplifier system for stabilizing a light source comprising a light source to be stabilized, a photoelectric cell for detecting a portion of the light from said source, a plural stage amplifier including at least three stages intermediate said photocell and said light source, glow lamp coupling means between said amplifying stages, a high potential source for said photocell and the anodes of the tubes in said amplifier stages, said coupling means having a low value of resistance, and coupling means between said photocell and said first stage of amplification, said last-mentioned coupling means including a resistor in series with said high potential source and said photocell, the variations in voltage across said resistor being amplified by said amplifier stages, the value of said resistor being of the order of 10,000 ohms.

WILBUR R. LE PAGE.