Oct. 16, 1951 J. WALKER 2,571,974

GOLF TRAINING DEVICE

Filed Nov. 18, 1946 3 Sheets-Sheet 1

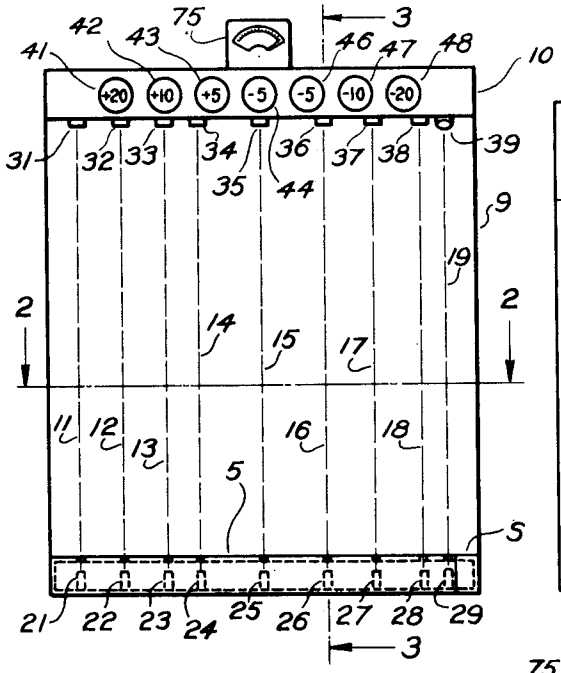

Fig. 1

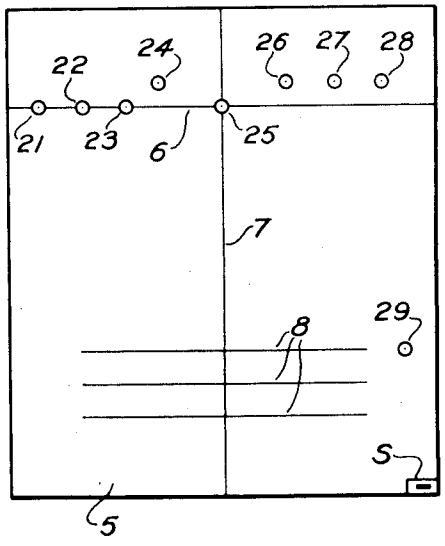

Fig. 2

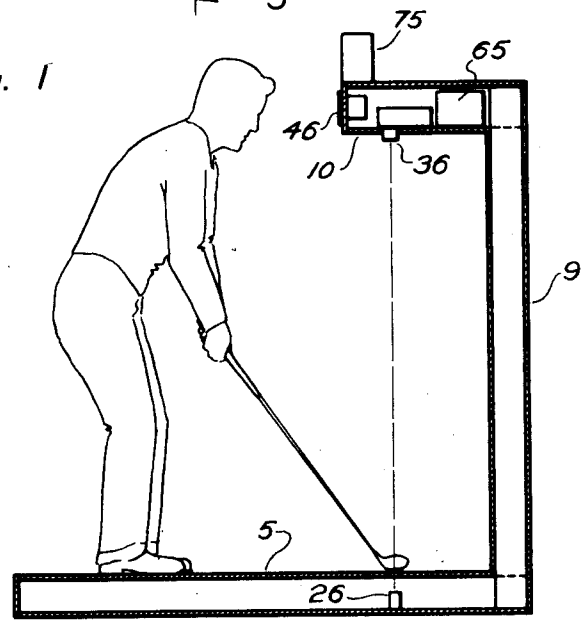

Fig. 3

John Walker
INVENTOR

Oct. 16, 1951 J. WALKER 2,571,974

GOLF TRAINING DEVICE

Filed Nov. 18, 1946 3 Sheets-Sheet 2

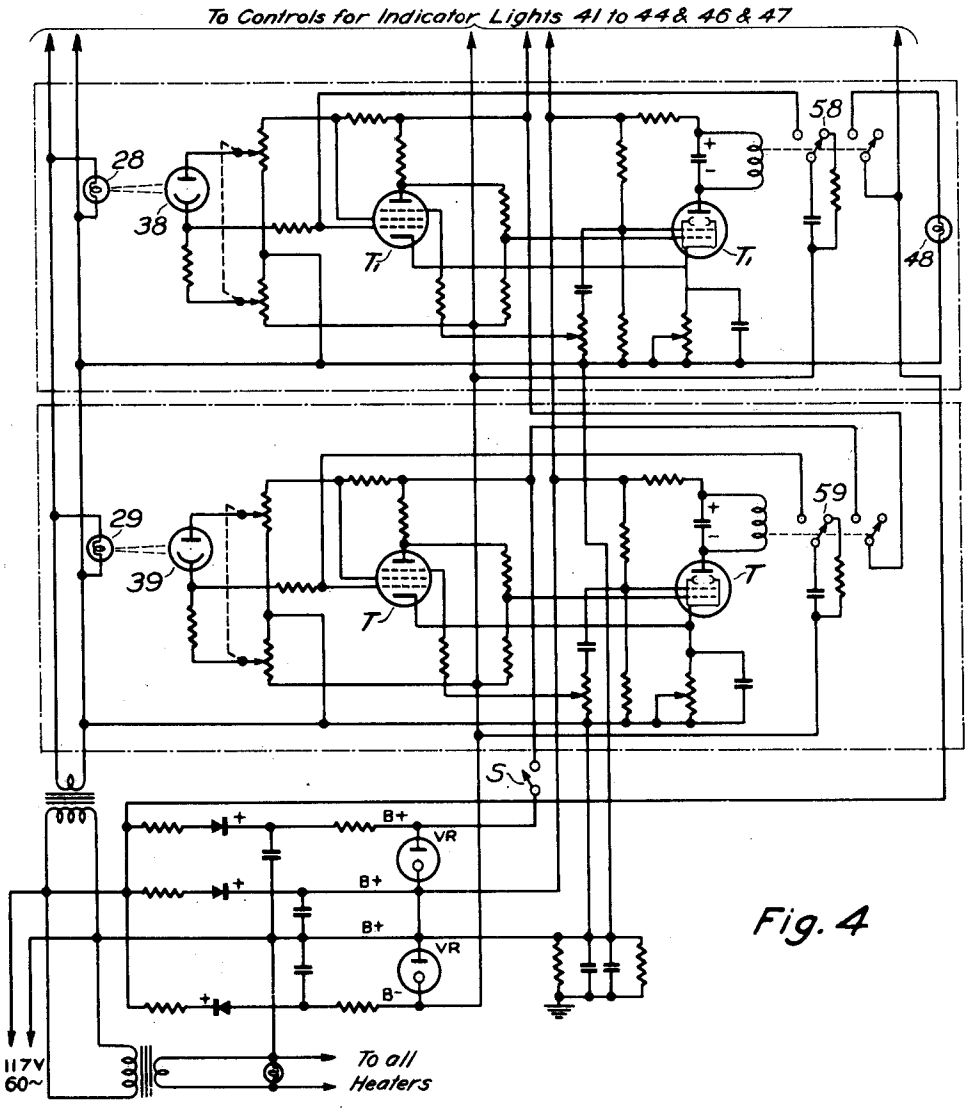

Fig. 4

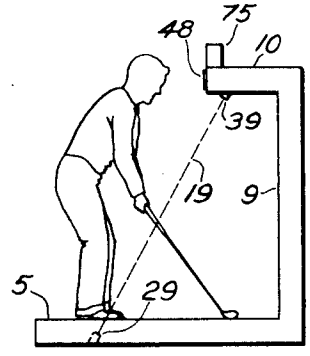

Fig. 5

John Walker

INVENTOR.

Oct. 16, 1951 J. WALKER 2,571,974

GOLF TRAINING DEVICE

Filed Nov. 18, 1946 3 Sheets-Sheet 3

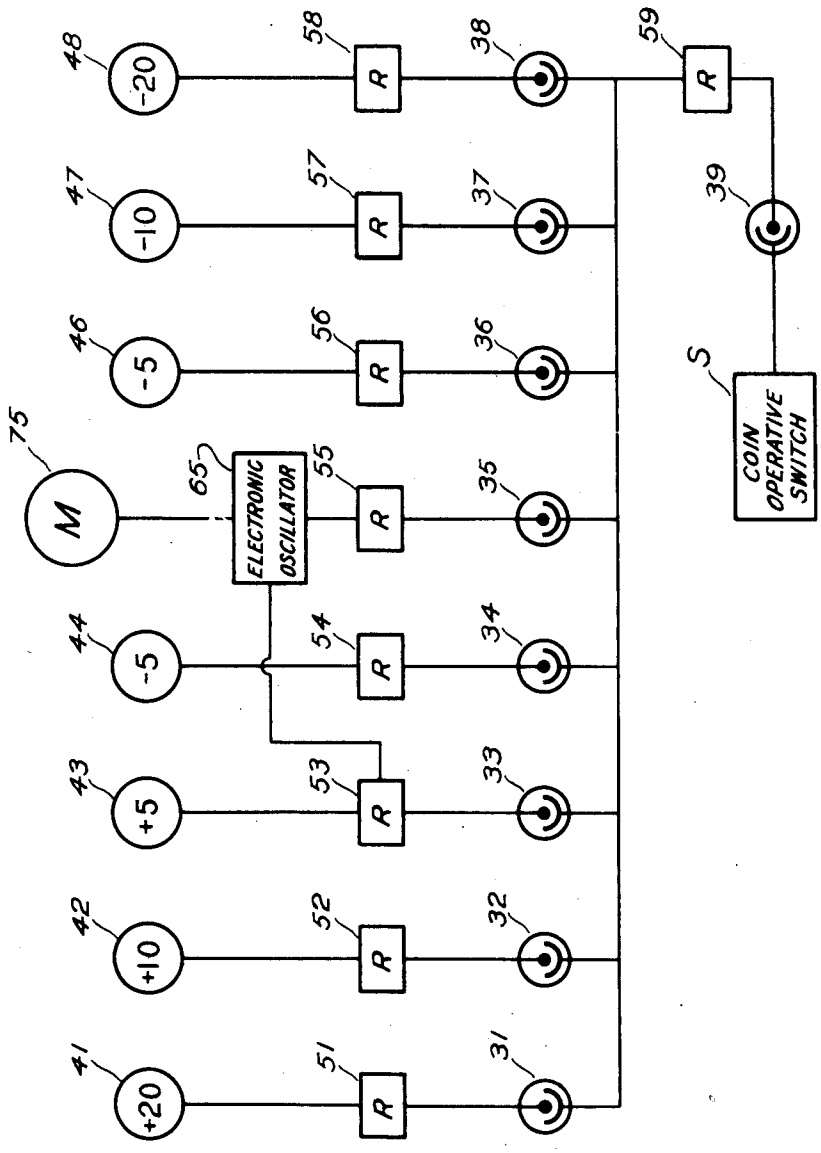

Fig. 6

John Walker

INVENTOR

Patented Oct. 16, 1951

2,571,974

UNITED STATES PATENT OFFICE

2,571,974

GOLF TRAINING DEVICE

John Walker, Alameda, Calif.

Application November 18, 1946, Serial No. 710,649

4 Claims. (Cl. 177—384)

1

This invention relates to golf training devices and has for its principal object the provision of a device whereby a golfer can check the "groove" of his swing.

A further object of my invention is the provision of a device that will register the speed of a golf club head as it travels through the "hitting area."

A still further object of my invention is the provision of a scoring system whereby an element of competition is introduced, in order that players may vie with one another to attain higher scores.

The method of accomplishing the foregoing will become apparent during the course of the following description and appended claims, taken in connection with the accompanying drawings forming a part hereof.

In the drawings:

Figure 1 is a front elevation of my device.

Figure 2 is a top plan view of the platform on which the player stands.

Figure 3 is a section taken on line 3—3 of Figure 1, and showing a player who has assumed his stance preparatory to making a swing.

Figure 4 is a wiring diagram of the control circuits.

Figure 5 is a side elevation of the device illustrating the relative positions of the player, the club and the energizing beam for the circuits, prior to the backswing being made.

Figure 6 is an elementary wiring diagram of the control circuits.

Referring to the drawings in detail, my device consists of a platform 5 marked with a line 6 indicating the line of flight, a line 7 bisecting line 6 and perpendicular thereto, and a series of parallel lines 8 intersecting line 7 at right angles, all being provided in order to assist a player in assuming a correct stance.

The platform 5 is preferably covered with rubber matting or like material, to provide adequate footing.

Extending upwardly from the back edge of the platform 5 is a vertical wall 9 which supports, at its upper end, a forwardly extending section 10 adapted to support, house and maintain in alignment, a number of control devices which will be described herein. The sections 5, 9 and 10 are preferably detachably secured together in order that the device may be knocked down for shipment.

In the interest of clarity, a system of numbering has been adopted whereby the elements common to each circuit are numbered in arithmetic progression in increments of ten.

2

Housed within the platform 5 are a number of light-beam units 21, 22, 23, 24, 25, 26, 27, 28 and 29, and in the section 10 are their photoelectric cells or other light-responsive devices 31, 32, 33, 34, 35, 36, 37, 38 and 39 respectively. The beams of light are indicated by broken lines on Figure 1, and are numbered 11 to 19 inclusive. All of the light beams are substantially vertical with the exception of beam 19 which is substantially vertical with reference to Figure 1, but with reference to Figure 5, slopes upwardly from the platform 5 and inwardly toward the section 10 at an angle of approximately thirty degrees.

Spaced along the front edge of the section 10 is a series of indicator lights 41, 42, 43, 44, 46, 47 and 48 with scores marked on the lenses as shown. The lenses are further distinguishable by a color scheme as follows: 46, 47 and 48 are red, 44 is yellow, and 41, 42 and 43 are green.

The indicator lights are energized through the medium of the photoelectric cells by their respective relays 51, 52, 53, 54, 56, 57 and 58.

An electronic oscillator 65, which is started by the circuit common to the cell 35 and relay 55, feeds a high frequency A. C. pulse to a rectifier type meter 75 which is calibrated to register feet per second. As the oscillator 65 is made inoperative by the relay 53, which is a make and break type controlling two circuits, it will be apparent that the number of pulses in the output of the oscillator 65, will be a function of the time which elapses between the breaking of the beams 15 and 13.

During normal standby operation, the filaments of all tubes T and T1 are energized ready for instant use, but the plate circuits are open. The coin operative switch S controls the circuit of cell 39, and, on energizing the circuit, the player assumes his position on the platform. He places his club in position, and may take the usual preliminary "wiggles" as the indicator and meter control circuits are open until the back swing breaks the beam 19.

Referring to Figure 5, it will be noted that the player, on making the backswing, will break the beam 19, tripping the relay 59, and thereby energizing the plate circuits of all the tubes T1.

It is now the aim of the player to break beams 15, 13, 12 and 11, but refrain from breaking beams 18, 17, 16 and 14. It will be noted from Figure 2 that beams 14, 16, 17 and 18 are located outside of the line of flight, and should not be disturbed. Breaking of these beams carries a penalty as shown by their respective indicator lights.

Breaking of beams 13, 12 and 11 indicates a

good follow through, and registers a score accordingly.

The greater velocity the club attains in the very short interval between the breaking of beams 15 and 13, the larger will be the score in feet per second registered on the meter. The aggregation of this score and the minus and plus indicator light figures, will give the total for the swing.

All indicator relays will have a break time-delay of approximately fifteen seconds to enable the player to observe his score.

Relays 55 and 53, which control the oscillator, will be synchronized for accurate results.

After the relays assume their normal position, the switch S must again be operated to repeat the cycle.

Referring to Figure 4, it will be noted that the wiring diagram shown thereon comprises a power supply unit, a circuit controlling the relay 59 and its related elements, and a circuit controlling one of the indicator lights, light 48. As the circuits controlling the remainder of the indicator lights are duplicates of the one illustrated, the disclosure of Figure 4 is deemed to be sufficient.

From the foregoing it will be apparent that I have devised a novel means of training for golf players, and one that can also be used as a means of competition.

Further modifications also may be made within the spirit and scope of the appended claims.

I claim:

1. A golf training device comprising a platform section having a second section mounted above it, a plurality of light-beam units mounted in one of said sections in spaced relation to radiate beams across a predetermined path, photoelectric cells mounted in the other of said sections and being in alinement with said light-beam units, and means including a plurality of indicators adapted to register when said beams are interrupted by a golf club head swung through said path said photoelectric cells being normally inoperative, and means adapted to render said photoelectric cells ready for operation by the backswing of the golf club.

2. A golf training device comprising a platform section having a second section mounted bove it, a plurality of light-beam units mounted in one of said sections in spaced relation to radiate beams across a predetermined path, a second plurality of light-beam units mounted in one of said sections and being adapted to radiate beams outside of said path, light-responsive devices mounted in the other of said sections and being in alinement with said light-beam units, means including a plurality of indicators adapted to register when said first mentioned beams are interrupted by a golf club head swung through said path, and means including a second plurality of indicators adapted to register when said second mentioned light beams are interrupted by a golf club head swung through them said light-responsive devices being normally inoperative, and means adapted to render said light-responsive devices ready for operation by the backswing of the golf club.

3. A golf training device comprising a plurality of indicators, a plurality of light responsive devices in spaced relation to control said indicators, a plurality of light-beam units in spaced relation to cooperate with said light-responsive devices and being so arranged as to register the path of a golf club interrupting the beams from said units, said light-responsive devices being normally inoperative, and means adapted to render said light responsive devices ready for operation by the backswing of a golf club.

4. A golf training device comprising a plurality of indicators in spaced relationship, controlling means for said indicators in spaced relation to function when a golf club head is swung through a predetermined path, said controlling means being normally inoperative, energizing means associated with said controlling means comprising a light-responsive device, and a light-beam unit coacting therewith, and being so arranged as to render said indicator controlling means ready for operation by the backswing of a golf club.

JOHN WALKER.

REFERENCES CITED

The following references are of record in the file of this patent:

UNITED STATES PATENTS

Number	Name	Date
1,419,636	MacDonald	June 13, 1922
2,113,899	Oram	Apr. 12, 1938
2,152,680	Blaski	Apr. 4, 1939
2,259,613	Cervey	Oct. 21, 1941
2,265,475	Fodor	Dec. 9, 1941
2,274,158	Penther	Feb. 24, 1942
2,283,277	Modine	May 19, 1942
2,335,280	Hogeberg	Nov. 30, 1943
2,399,061	Rosenblum	Apr. 23, 1946
2,425,257	MacLagan	Aug. 5, 1947