Aug. 9, 1949. M. LANGE 2,478,699

ILLUMINATED BACKGROUND

Filed Dec. 30, 1944 3 Sheets-Sheet 1

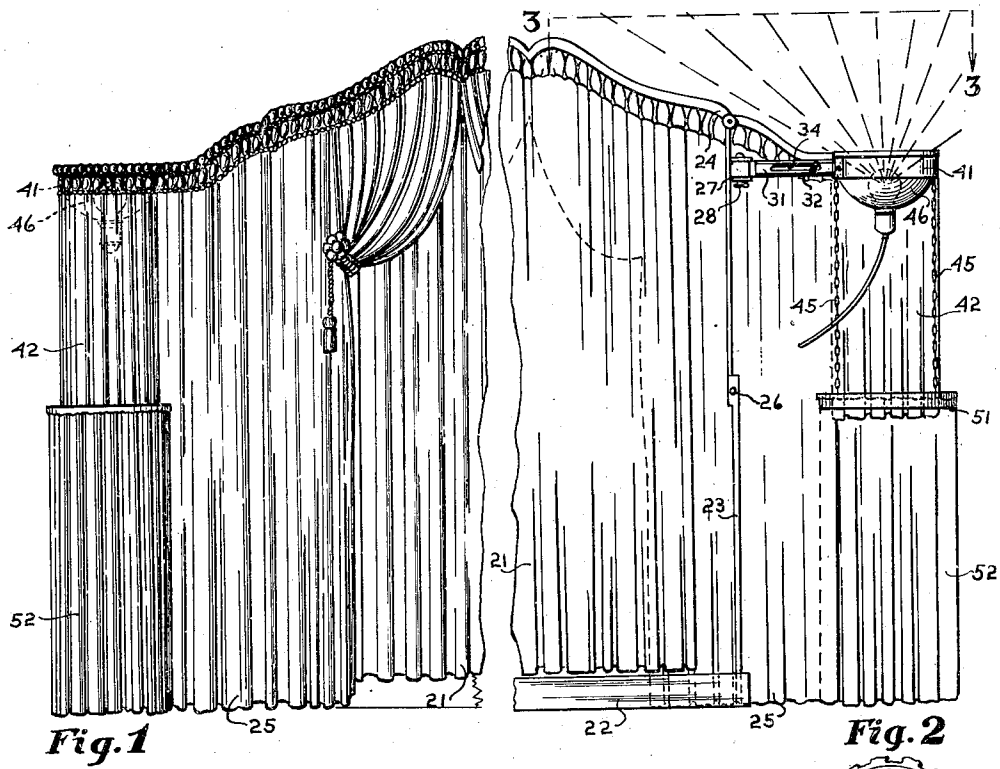

Fig. 1

Fig. 2

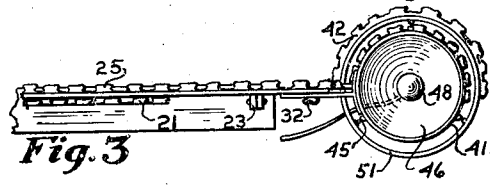

Fig. 3

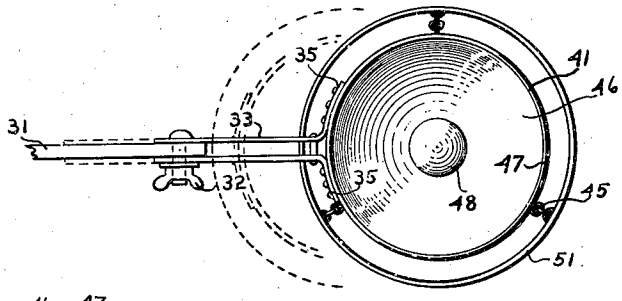

Fig. 4

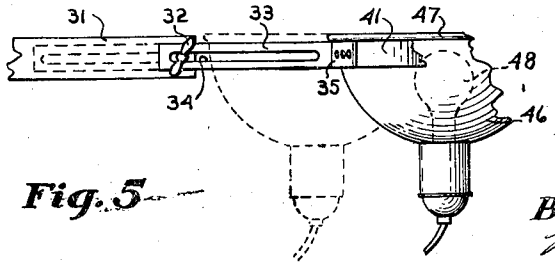

Fig. 5

INVENTOR
MORRIS LANGE
BY Morton S. Brockman

Aug. 9, 1949. M. LANGE 2,478,699

ILLUMINATED BACKGROUND

Filed Dec. 30, 1944 3 Sheets-Sheet 2

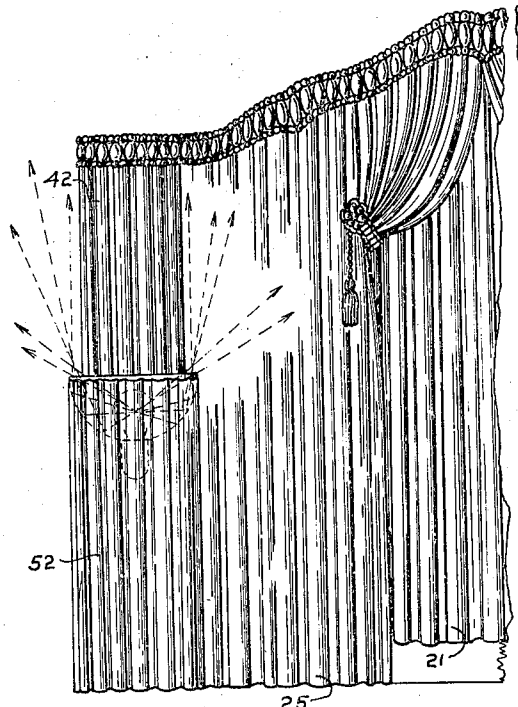

Fig.6

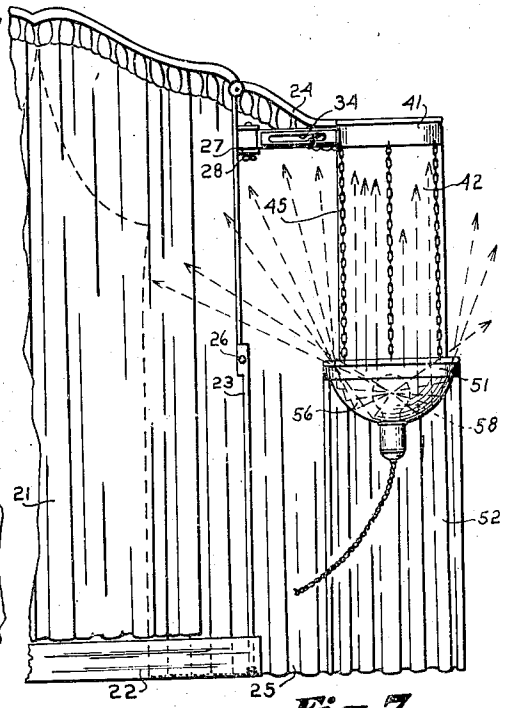

Fig.7

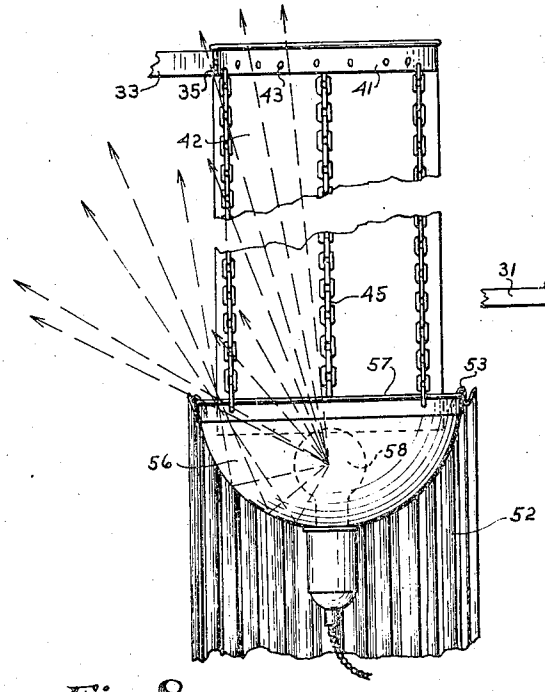

Fig.8

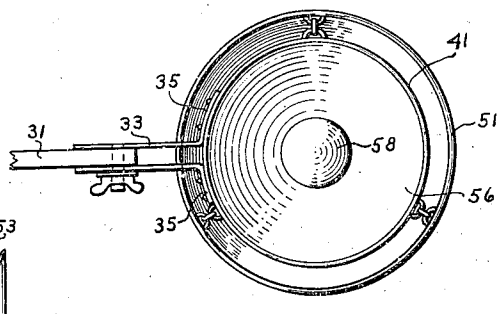

Fig.9

INVENTOR
MORRIS LANGE
BY
Morton S. Brockman

Aug. 9, 1949. M. LANGE 2,478,699

ILLUMINATED BACKGROUND

Filed Dec. 30, 1944 3 Sheets-Sheet 3

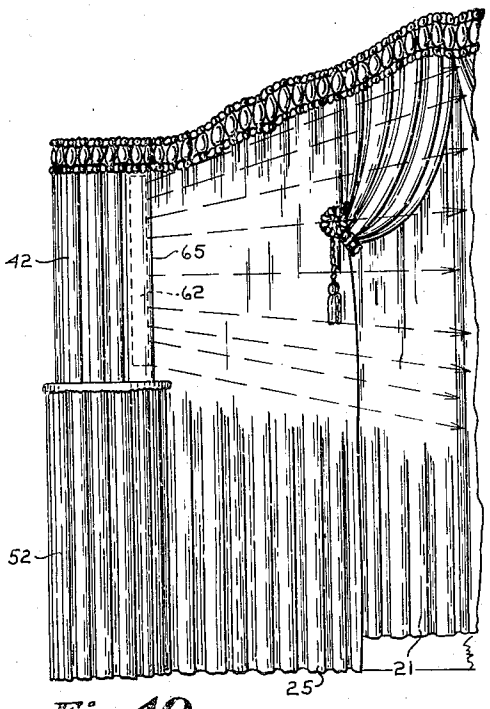

Fig.10

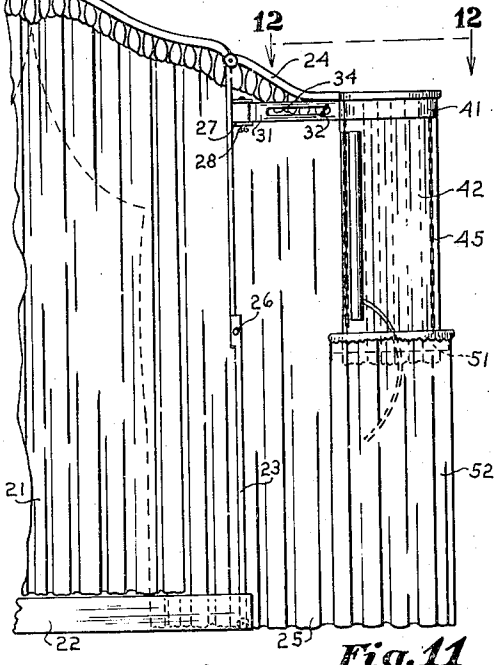

Fig.11

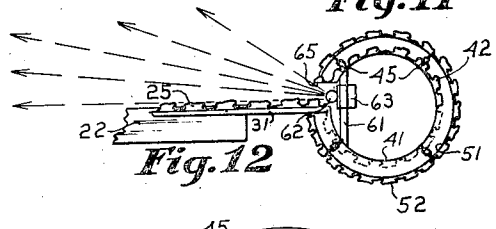

Fig.12

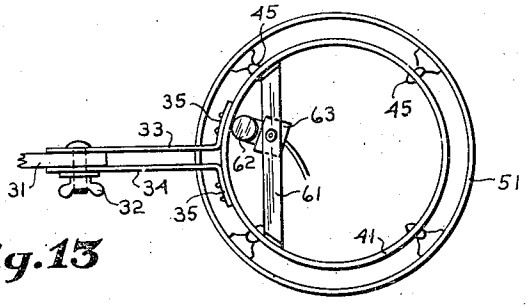

Fig.13

INVENTOR
MORRIS LANGE
BY Morton S. Brockman

Patented Aug. 9, 1949 2,478,699

UNITED STATES PATENT OFFICE

2,478,699

ILLUMINATED BACKGROUND

Morris Lange, University Heights, Ohio

Application December 30, 1944, Serial No. 570,715

18 Claims. (Cl. 160—127)

1

This invention relates to illuminated draped backgrounds and particularly to backgrounds used for displaying and illuminating caskets.

The primary object of this invention is to provide a background that has a self-contained illuminating device and which not only illuminates the background itself, but also the casket or bier in front of it.

Another object is to provide a device of the type mentioned which has the appearance of considerable bulk and stability but which is actually collapsible and is quickly and easily folded into a carrying case so that it may be conveniently transported or carried from place to place.

A further object is to construct a background which may be easily expanded or contracted to fit a particular location or setting.

Still another object of the invention is to equip a collapsible draped backgrond with vertical side portions which simulate pillars or columns and which may be illuminated in various manners to suit particular conditions or requirements.

These and other objects of the invention will become apparent from a reading of the following description and claims, together with the accompanying drawing, in which like parts are referred to and indicated by like reference characters and wherein:

Figure 1 is a front elevation of the left half of an illuminated draped background made in accordance with this invention, and showing one form of illumination;

Figure 2 is a rear view of the part of the background shown in the Figure 1;

Figure 3 is a plan view of a portion of the device, taken along the line and in the direction of the arrows 3—3 of the Figure 2;

Figure 4 is an enlarged plan view of a part of the frame, an extendible arm, and showing a columnar top ring attached thereto;

Figure 5 is a side elevation of the parts shown in the Figure 4;

Figure 6 is a front elevation of the left half of an illuminated draped background, showing a modified method of illumination;

Figure 7 is a rear view of the part of the background shown in the Figure 6;

Figure 8 is an enlarged view of a portion of a column embodying the modified form of illuminating device shown in the Figures 6 and 7;

Figure 9 is a plan view of a frame arm and a columnar ring attached thereto, but without drapery hung thereon;

Figure 10 is a front elevation of a left half of an illuminated background and particularly

2

showing the side columns arranged for fluorescent illumination;

Figure 11 is a rear view of the part of the background shown in the Figure 10;

Figure 12 is a plan view of a portion of the device, taken along the line and in the direction of the arrows 12—12 of the Figure 11; and

Figure 13 is an enlarged plan view of the extendible frame arm, the columnar rings, and a fluorescent light mounted thereon.

The simplest form of the invention is shown on the first sheet of drawings. Here the central background 21 and one of the side portions 25 are shown as being mounted on a folding frame similar to the collapsible frame disclosed in the Patent No. 2,186,510, granted to Vernon F. Walter and Morris Lange on January 9, 1940. The illuminated side columns or pillars constituting the principal features of this invention may be mounted on any type of draped background that has substantial upright members on which the arm members 31 may be attached. Similar draped backgrounds suitable for association with this invention are also shown in Patents Nos. D. 113,930, 2,186,533 and 2,205,295 which were granted to me on March 21, 1939, January 9, 1940, and June 18, 1940, respectively. While the drawings show only one-half of a background and only one side column or pillar thereof, it should be understood that the devices are symmetrical and have substantially identical pillars on each side.

Figures 1 and 2 of the drawings show a carrying case 22 in which there is mounted a folding upright frame or support 23. This has a hinge joint 26 at approximately its center and the two vertical uprights support the top horizontal and lateral portions 24. Hanging from the top and lateral portions 24 are the attractive draped curtains 21 and 25 which make up the background. Attached to the hinged top portions of the upright frame supports 23 there are brackets 27 on which the horizontal arms 31 pivot and extend laterally. The extendible arms 31 may be fixed in any desired position relative to the bracket 27 by means of the vertical pin 28 which may be a simple bolt and wing nut. Thus pivoted, the hereinafter described columns may be brought forward or rearward, as desired. The extendible members consisting of arm portions 31 and 33 may be contracted or expanded as desired. Each hinged portion 31 has a wing nut and bolt 32 passing horizontally therethrough which engages the slot 34 in the extension portion 33. This construction permits the entire background

to be made wider or narrower as desired to suit a particular occasion, setting or casket.

The arm **33** flares or opens and forms two arcuate wing portions **35**. The top small ring **41** is attached to the wing portions **35** as clearly shown in the Figures 4 and 5. A set of chains or flexible cords **45** depend from the small ring **41** and support a large ring **51**. The large ring **51** is concentric with the small ring **41** and hangs approximately half way below. The upper drape **42** is detachably suspended by means of suitable drapery hooks around the small ring **41** and its bottom edge is slightly below the ring **51**. The ring **41** may be perforated as indicated by the reference character **43** to receive the hooks, if desired. A similar drape **52** which forms the wide bottom columnar portion is removably mounted on the large ring **51** by means of similar curtain hooks **53** as shown in the Figure 8. The bottom edge of the drape **52** is about even with the bottom edge of the side portion **25** of the background. When completely mounted, the drapes **42** and **52** resemble and simulate offset round columns on each side of the background. If desired, the rings **51** may be perforated to receive the drapery hooks **53**.

The illuminating device used with the first form of the invention shown on sheet one of the drawings consists of a reflector **46** that has a bead **47** around its edge and which is slightly larger than the inside diameter of the small ring **41**. The reflector may then be supported in the ring **41**, in the manner shown in the Figure 5. The reflector **46** contains a conventional light bulb **48** and the illumination thus provided is directed upward to the ceiling and the background is therefore illuminated indirectly.

The drapes **42** and **52** are easily and quickly demounted and folded into the case **22**. The illuminating devices, consisting of the two reflectors, bulbs and cords, are quickly and easily dismantled and packed for convenient carrying. The arms **31** and **33** are contracted and may be either detached from the upright frame **23** and the bracket **27**, or they may be swung inward to fit into the carrying case **22**. The small and large rings **41** and **51** and the chains **45** are nested together and may be similarly packed.

Second form of the invention

The second form of the invention, shown on sheet two of the drawings, consists of a background substantially the same as the one heretofore described. It has extendible arm members **31** and **33** that are pivotally mounted on the folding frame **23** by means of the bracket **27** and the pin **28**. It also has small and large upper and lower spaced concentric rings **41** and **51**, and has similar drapes **42** and **52** depending therefrom.

It differs from the first form of the invention in that it utilizes larger reflectors **56** instead of the heretofore described reflectors **46**. The reflectors **56** have beads **57** therearound which fit over the top edges of the large rings **51**, as is clearly shown in the Figures 8 and 9. Small brim portions of the reflectors should be cut away to clear the depending chains **45** where they are connected to the rings **51**. The light rays emanating from the bulbs **58** are therefore projected upward, through and around the narrow top columnar portions formed by the hanging drapes **42**. By this method of illumination and assembly, much of the background is directly illuminated and the two top offset portions of the two columns are more brilliantly displayed.

Third form of the invention

The third form of the invention shown on sheet three of the drawing, is substantially the same as the two previously described forms. It too has extendible arm members **31** and **33** that are pivotally mounted on the folding frame **23** by means of the bracket **27** and the pin **28**. It also has small and large upper and lower spaced concentric rings **41** and **51**, and has similar drapes **42** and **52** depending therefrom. It differs from the previously described forms because it utilizes long, vertical fluorescent bulbs instead of conventional round tungsten type bulbs and reflectors.

The extendible arm members **31** and **33** are similarly mounted on the upright frame **23** and support small top rings **41** and large bottom rings **51**, concentric therewith and spaced therefrom. Attached to the inner wall of each of the top rings **41** there is a small arcuate bracket **61** to which there is removably attached or hung a fluorescent fixture **63** and lamp **62**. The fluorescent lamp hangs downward to about the top of the ring **51**. The drapes **42** and **52** are hung on the rings **41** and **51** similarly, as shown, but the drapes **42** are opened slightly and are permitted to form vertical openings adjacent to the side portions **25** of the background and in front of the fluorescent lamps **62**.

The rays of light emanating from the fluorescent lamps **62** are projected substantially sidewise and therefore throw more illumination on the casket or bier in front of the background. The fluorescent lamps and fixtures are hidden from normal view and the columns and other spaces are not directly illuminated.

If desired, the drapery material may be suspended from the rings **41** and **51** in front of the background only, or hung only from the portions of the columns which are in normal view, thus simulating the appearance of complete round columns and at the same time saving considerable drapery material.

If desired, various modifications of these three forms of the invention may be made up by simply rearranging or combining the illuminating devices. Two horizontal reflectors may be used on each side of the device simultaneously. The reflectors **46** and **56** shown on sheets **1** and **2** of the drawing may be mounted on the rings **41** and **51** at the same time. Also, reflectors and lights similar to the reflectors **46** which are used with the first form of the device, may also be mounted on the top rings **41**, together with the fluorescent illuminators shown on sheet three of the drawing. In this way, various degrees and kinds of illumination may be had and as required for different circumstances and conditions. Colored lights may also be effectively used with this invention.

Having thus disclosed the invention in its preferred forms, it should be understood that the embodiments thereof as illustrated and described are suggestive only and are not to be regarded in a limiting sense, as there may be many other forms or modifications of the invention which may reasonably be considered as being within the scope of the appended claims.

I claim:

1. An illuminated background, comprising in combination, a curtain member including a side portion and having a frame therefor, the said frame having an annular element, a draped columnar member depending from the frame, and lighting means mounted on the annular element inside of the columnar member and illuminating the curtain member.

2. An illuminated background, comprising in combination, a curtain member including a side portion and having a frame therefor, the said frame having a forwardly extending annular element, a draped columnar member depending from the annular element adjacent to the side portions and in front of the said curtain member, and lighting means mounted on the annular element inside of the columnar member and illuminating the curtain member.

3. An illuminated background, comprising in combination, a curtain member including side portions and having frames therefor, the said frames having horizontal ring-like elements attached thereto, drapery members depending from the said elements, and lighting devices inside of the drapery members and supported by the said elements and illuminating the curtain member.

4. An illuminated background, comprising in combination, a curtain member including side portions and having frames therefor, the said frames having adjustably movable annular elements mounted thereon, drapery members depending from the said elements in front of the said curtain member, and lighting devices inside of the drapery members and supported by the said elements and illuminating the curtain member.

5. An illuminated background, comprising in combination, a collapsible curtain member having a folding frame therefor and having draped side portions depending therefrom, spaced concentric annular members mounted on the frame adjacent to the side portions, drapery members depending from the concentric annular members, and lighting devices mounted in the drapery members illuminating the curtain member.

6. An illuminated background, comprising in combination, a collapsible curtain member having a folding frame therefor and having draped side portions depending therefrom, spaced horizontal ring-like members mounted on the said frame, drapery depending from the ring-like members and forming columnar portions adjacent to and in front of the side portions, and lighting devices mounted on the ring-like members inside the columnar portions and illuminating the curtain member.

7. An illuminated background, comprising in combination, a collapsible curtain member having a folding frame therefor and including side portions depending in a vertical plane, pairs of spaced concentric ring members mounted on each side of the frame, drapery depending from all of the ring members forming stepped columnar portions adjacent to the side portions, and lighting devices mounted on the ring-member inside the columnar portions.

8. An illuminated background, comprising in combination, a collapsible curtain member having a folding frame therefor and including draped side portions depending therefrom in a vertical plane, pairs of spaced concentric horizontal ring members mounted on each side of the frame, drapery depending from all of the ring members forming wide bottom and narrow top columnar portions adjacent to and in front of the side portions, and lighting devices mounted on the ring members inside the columnar portions.

9. An illuminated background, comprising in combination, a collapsible curtain member having a folding frame therefor and including side portions depending therefrom in a vertical plane, pairs of spaced concentric ring members mounted

on each side of the frame, drapery depending from all of the ring members forming wide bottom and narrow top columnar portions adjacent to the side portions, and lighting devices supported by the ring members inside the narrow top columnar portions.

10. An illuminated background, comprising in combination, a collapsible curtain member having a folding frame therefor and including side portions depending therefrom in a vertical plane, pairs of spaced concentric ring members mounted on each side of the frame, drapery depending from all of the ring members forming wide bottom and narrow top columnar portions adjacent to the side portions, and lighting devices supported by the ring members inside the wide bottom columnar portion.

11. An illuminated background, comprising in combination, a collapsible curtain member having a folding frame therefor and including side portions depending therefrom in a vertical plane, pairs of spaced concentric ring members mounted on each side of the frame, drapery depending from all of the ring members forming wide bottom and narrow top columnar portions adjacent to and in front of the side portions, the said narrow top columnar portion having a vertical opening therein, and lighting devices supported by the ring members inside the narrow top columnar portions and illuminating the said curtain member.

12. In an illuminated background, a draped column, comprising in combination, an arm member mounted on the background, a ring member mounted on the arm member, a source of light and a light ray reflector therefor supported by the ring member, and drapery depending from the ring member and encircling the said reflector and light, concealing the same from normal view but permitting light rays to be emitted therefrom.

13. A device of the type defined in claim No. 12 and wherein the arm member is extendable.

14. In an illuminated background, a draped column, comprising in combination, an arm member mounted on the background, spaced concentric horizontal ring members respectively supported and suspended in vertical alinement from the arm member, drapery depending from each of the spaced concentric ring members, and a reflector having a light bulb therein mounted in one of the ring members and concealed from normal view by the said drapery.

15. In an illuminated background, a draped column, comprising in combination, an arm member mounted on the background, a small ring member mounted on the arm member, a large ring member suspended concentrically with and horizontally from the small ring member, drapes mounted on both ring members forming vertically aligned wide bottom and narrow top columnar portions, and a reflector having a light bulb therein mounted in the small ring member and concealed from normal view by the drape forming the narrow top columnar portion.

16. In an illuminated background, a draped column, comprising in combination, an arm member mounted on the background, a small ring member mounted on the arm member, a large ring member suspended concentrically with and horizontally from the small ring member, drapes mounted on both ring members forming vertically aligned wide bottom and narrow top columnar portions, and a lighting means mounted in the large ring member concealed from normal view

by the drape forming the wide bottom columnar portion and illuminating the narrow top columnar portion.

17. In an illuminated background, a draped column, comprising in combination, an arm member mounted on the background, a small ring member mounted on the arm member, a large ring member suspended concentrically with and horizontally from the small ring member, drapes mounted on both ring members forming vertically aligned wide bottom and narrow top columnar portions, the narrow top columnar portion having a vertical opening therein, and a lighting means mounted on the small ring member inside the narrow top columnar portion and emitting light through the vertical opening.

18. In an illuminated background, a draped column, comprising in combination, an arm member mounted on the background, a ring member mounted on the arm member, a drape depending from the ring member forming a columnar portion and having a vertical opening therein, and a

laterally directed light means mounted on the ring member inside the columnar portion adjacent to the vertical opening and emitting light rays therethrough and illuminating the said background.

MORRIS LANGE.

REFERENCES CITED

The following references are of record in the file of this patent:

UNITED STATES PATENTS

Number	Name	Date
785,695	Munns	Mar. 21, 1905
1,786,787	Steinmeyer	Dec. 30, 1930
2,004,262	Widman	June 11, 1935
2,019,347	Havey	Oct. 29, 1935
2,186,533	Lange	Jan. 9, 1940

FOREIGN PATENTS

Number	Country	Date
405,016	Great Britain	1934