June 12, 1951 H. FREEDMAN 2,556,495

STERILIZING APPARATUS

Filed Jan. 26, 1948 3 Sheets-Sheet 1

Fig. 1.

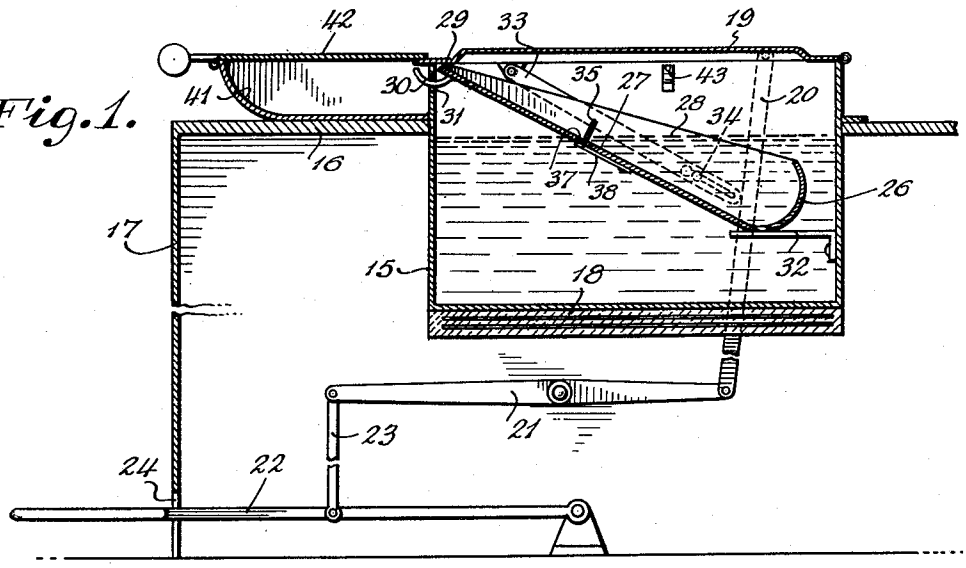

Fig. 3.

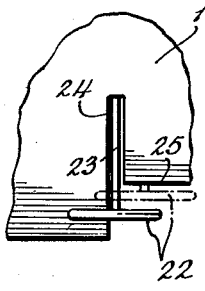

Fig. 2.

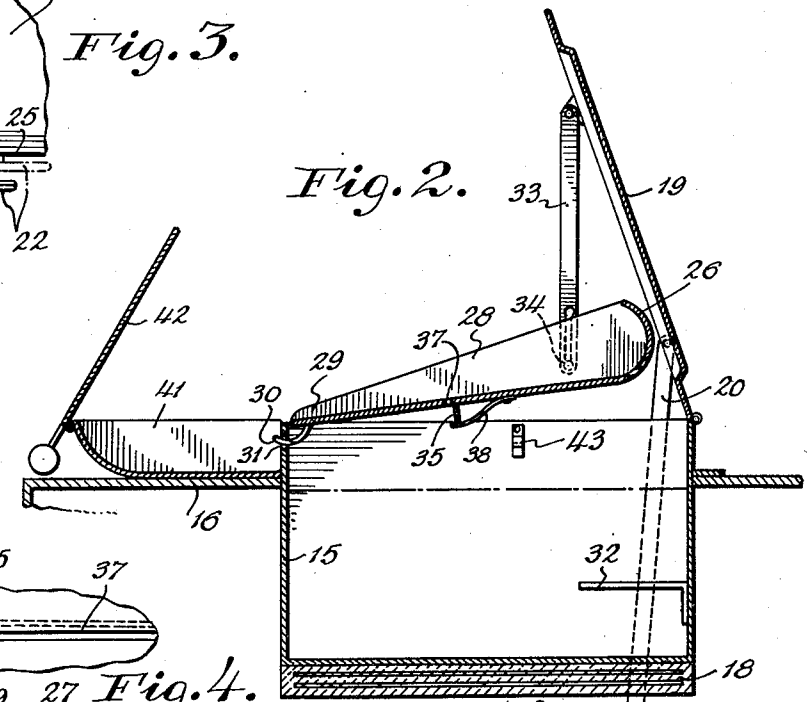

Fig. 5.

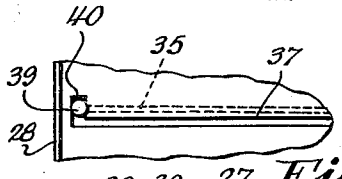

Fig. 4.

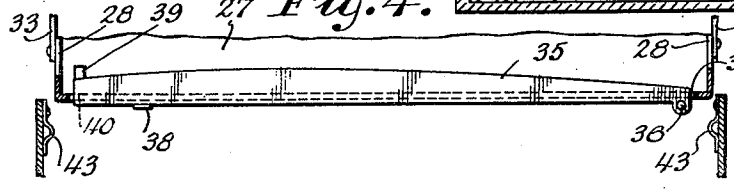

INVENTOR
HYMAN FREEDMAN
BY
Edward L. Mueller
ATTORNEY

June 12, 1951 H. FREEDMAN 2,556,495

STERILIZING APPARATUS

Filed Jan. 26, 1948 3 Sheets-Sheet 2

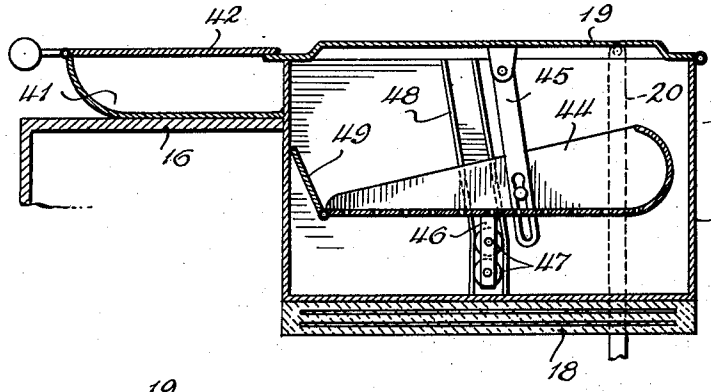

Fig. 6.

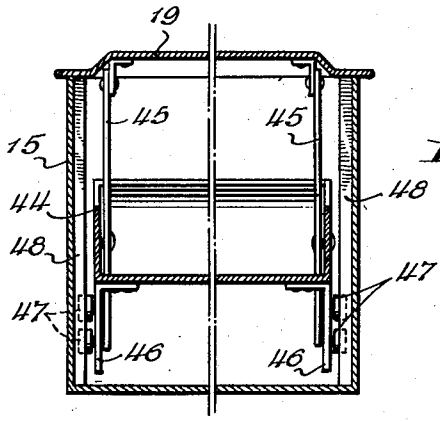

Fig. 8.

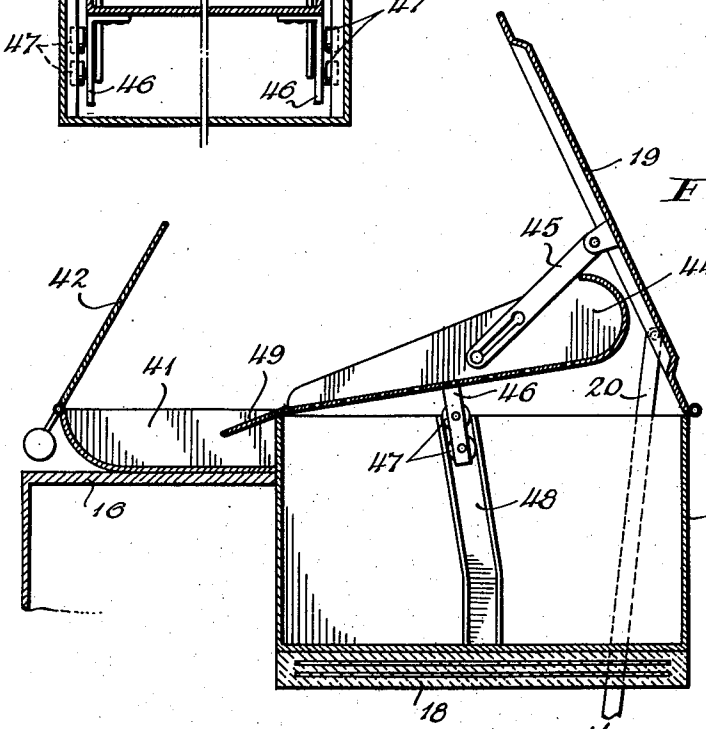

Fig. 7.

INVENTOR
HYMAN FREEDMAN
BY
Edward L. Mueller
ATTORNEY

June 12, 1951 H. FREEDMAN 2,556,495

STERILIZING APPARATUS

Filed Jan. 26, 1948 3 Sheets-Sheet 3

Fig. 9.

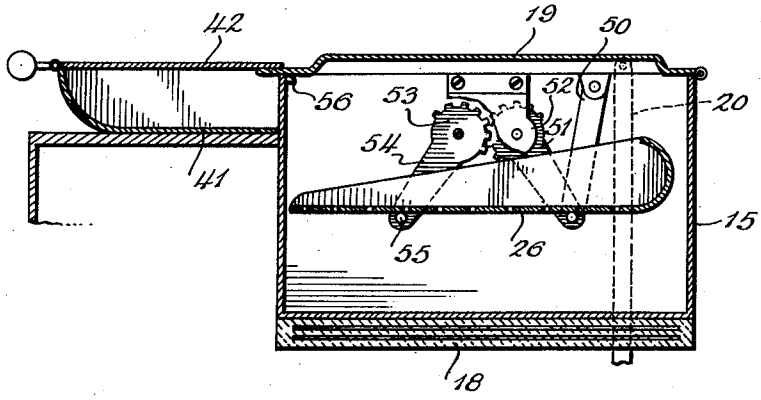

Fig. 11.

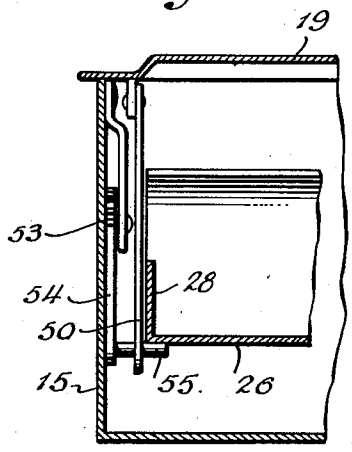

Fig. 10.

INVENTOR
HYMAN FREEDMAN
BY
Edward L. Mueller
ATTORNEY

Patented June 12, 1951 2,556,495

UNITED STATES PATENT OFFICE

2,556,495

STERILIZING APPARATUS

Hyman Freedman, New York, N. Y.

Application January 26, 1948, Serial No. 4,255

9 Claims. (Cl. 21—91)

1

This invention relates to improvements in sterilizing apparatus and has particular reference to apparatus for sterilizing surgical instruments.

It is known, in dentistry, to provide a sterilizing apparatus in which an instrument tray is supported within a tank in a horizontal position and movable therein, by the opening of the tank cover, to an elevated position while maintaining the tray horizontal. After so doing, the sterilized instruments are removed from the tray by means of a pair of tongs or forceps. This latter operation often results in the accidental dropping of one or more of the instruments with possible damage thereto and necessitating their re-sterilization.

The present invention is designed to overcome the above difficulty by providing an improved apparatus which will eliminate the necessity of using tongs to remove the instruments from the sterilizing tray. For this purpose, the invention provides means whereby the instrument tray, as it is elevated from the tank, will also be adjusted to an inclined position so that the instruments therein will be discharged, by gravity, from the tray and, if desired, be deposited into an auxiliary receptacle containing a cooling liquid from which the instruments may be removed by hand.

The inventive idea involved is capable of receiving a variety of mechanical expressions some of which, for purposes of illustration, are shown in the accompanying drawings wherein:

Fig. 1 is a vertical section of one form of the apparatus, with the sterilizing tray shown in its lowered position within the main tank;

Fig. 2 is a similar view showing the sterilizing tray elevated and in discharging position;

Fig. 3 is a fragmentary detail, in front elevation, of the operating treadle in its fully and partially depressed positions, the latter being shown in dotted lines;

Fig. 4 is a front elevation of the sterilizing tray in its elevated position and illustrating the operative position of a stop member at the discharge end of the tray;

Fig. 5 is a fragmentary plan view of the discharge end of said tray;

Fig. 6 is a sectional view like Fig. 1, and showing another form of the invention;

Fig. 7 is a similar view illustrating the tray in discharge position;

Fig. 8 is a fragmentary transverse sectional view of the form shown in Fig. 6, and

Figs. 9, 10 and 11 are views similar to Figs. 6 to 8, respectively, illustrating another form of the invention.

2

Referring more particularly to Figs. 1 to 3, the apparatus is shown as comprising a main tank 15 mounted in a suitable support 16 having a front wall 17, and disposed in the bottom of said tank is an element 18 for heating the water within the tank. Said tank is provided with a hinged cover 19 to which is connected one end of a link 20 forming part of the mechanism for adjusting said cover to open position. Said mechanism further comprises a lever 21 having one end connected to said link 20 and its other end joined to the foot treadle 22 by the link 23. Said foot treadle projects through a vertical slot 24 in the wall 17 and the latter is cut away at 25 to permit lateral shifting of the treadle when the latter is partially depressed, so that it can be engaged with the edge of said cut away portion and thus be held in its partially depressed position without maintaining pressure upon the treadle for a purpose which will presently appear.

The tank 15 is adapted to receive therein the sterilizing tray 26 the bottom 27 of which is perforated and the sides 28 of which are tapered forwardly to form, with the bottom 27, a discharge end 29. Adjacent the forward edge of said bottom, there is provided one or more curved rigid hinge members 30 which extend through openings 31 in the front wall of the tank 15 to provide a pivotal connection for the tray 26 with said tank. A shelf 32 secured to the rear wall of the tank forms a support for the tray when the latter is in operative position within said tank and contains instruments which are to be sterilized.

The tray 26 is adjusted from its rearwardly inclined position of Fig. 1 to the elevated and forwardly inclined discharge position of Fig. 2 by the movement of the cover 19 to open position when the foot treadle 22 is depressed, and such adjustment is attained by joining the cover 19 with said tray through the medium of the link 33 pivoted at one end to the forward portion of said cover and having a pin and slot connection 34 with a side 28 of the tray. Through this arrangement, when the treadle 22 is fully depressed, the tray 26 will be elevated and, by reason of the pivotal connection 30, 31, will at the same time be tilted forwardly so that the bottom 27 will be inclined downwardly toward its discharge end 29, thus permitting the instruments in the tray to move, by gravity, toward said end.

A stop member 35 for said instruments is pivoted at 36 (Fig. 4) to the bottom 27 adjacent said discharge end 29 and is normally urged upwardly through a slot 37 in said bottom by means of the

leaf springs 38 secured to said bottom and engaging the lower edge of said stop. When in its raised position, said stop will prevent the instruments in the tray from being discharged therefrom. However, to permit of such discharge, a projection 39 adjacent the free end of the stop 35 may be depressed until the upper edge thereof is below the under surface of the bottom 27, whereupon the stop may be flexed rearwardly, as indicated in dotted lines in Fig. 5, with the projection 39 entering a notch 40. With the stop thus depressed, the instruments in the tray will be free to slide through the discharge end 29 to enter an auxiliary receptacle 41 disposed contiguous to said end and which may contain a cooling fluid and from which said instruments may be extracted by hand. The receptacle 41 is provided with a counterbalanced cover 42 which in its closed position, engages and overlaps the free adjacent edge of the cover 19 so that when the latter is swung to open position it will also raise the cover 42.

It may be desired to only partially raise the tray 26 so that its bottom 27 will be in a horizontal position and to retain it in such position. For this purpose, as the treadle 22 is depressed the sides 28 of the tray 26 will frictionally engage the bowed spring elements 43 when the tray is in a substantially horizontal position and the treadle has been lowered to a point below the edge 25. Sensing such frictional engagement through the treadle, the operator may then shift the latter to the dotted line position of Fig. 3 where it will engage said edge 25 to prevent the return of the treadle which will be thus held partially depressed with the tray in substantially horizontal position.

In the form of the invention shown in Figs. 6 to 8, the tank 15 is of the same construction as previously described and its cover 19 is controlled in the same manner through the link 20. The tank is also provided with the auxiliary receptacle 40 into which sterilized instruments are discharged and which is provided with the cover 42 adapted to be opened by the cover 19 when the latter is raised. The sterilizing tray 44 is of substantially the same construction as the tray 26 and is connected to the cover 19 by the slotted lever 45 which is adapted to elevate the tray when said cover is opened. In order that the tray will be forwardly inclined when fully raised, an extension 46 depending from the bottom of the tray at each side thereof is provided with a pair of rollers 47 which are engageable in the guide or trackway 48 attached to the side of the tank. The lower end of the guide is vertically disposed for a short distance and is then forwardly inclined so that as the tray is elevated it will also be tilted forwardly. A flap 49 hinged to the discharge end of the tray extends over the adjacent wall of the tank and into the receptacle when the tray is fully elevated so as to guide the instruments from the tray into said receptacle.

In Figs. 9 to 11, the tray 26 is elevated from within the tank by the raising of the cover 19 which, in this instance, is connected by a link 50 to an arm 51 pivoted to the adjacent wall of the tank 15 and provided with a segmental gear 52. Said gear meshes with a similar gear 53 on the pivoted arm 54 which has a pin 55 at its free end engaging the bottom of the tray 26 to raise the latter as the cover 19 is swung to open position. In order to cause the tray to assume a forwardly inclined position, as in Fig. 10, a stop 56 is secured above the top edge of the tank wall adjacent the discharge end of the tray and in the path thereof as the tray moves upwardly so that as said tray end engages the stop, the upward movement of said discharge end will be arrested while the rear end of the tray will continue to be elevated until the cover 19 is fully opened.

What is claimed is:

1. Sterilizing apparatus for surgical instruments, comprising a sterilizing tank, an instrument holding tray having a bottom and a discharge end, means for supporting said tray in a sterilizing position in said tank and in an instrument discharging position in which the tray is located above the tank with the bottom of the tray inclined downwardly toward the discharge end, and means for moving said tray between said two positions.

2. Sterilizing apparatus for surgical instruments, comprising a sterilizing tank, an auxiliary receptacle adjoining said tank, an instrument holding tray having a bottom and a discharge end directed toward said auxiliary receptacle, means for supporting said tray in a sterilizing position in said tank and in an instrument discharging position in which the tray is located above the tank with the bottom of the tray inclined downwardly toward the discharge end to enable instruments to slide down said inclined bottom toward said auxiliary receptacle, and means for moving said tray between said two positions.

3. Sterilizing apparatus for surgical instruments comprising a tank having a movable cover, an auxiliary receptacle adjoining said tank and having a movable cover, a portion of which engages and overlies the cover of said tank when said covers are in closed position, an instrument holding tray having a bottom and a discharge end directed toward said auxiliary receptacle, means for supporting said tray in a sterilizing position in said tank and in an instrument discharging position in which the tray is located above the tank with the bottom of the tray inclined downwardly toward the discharge end, means for moving said tray between said two positions, and means cooperating with said tray moving means for moving the tank cover to open position thereby causing said cover by its engagement with the receptacle cover to move the latter toward its open position.

4. Sterilizing apparatus according to claim 1, and a depressible stop member carried by said tray adjacent its discharge end and movable to an instrument retaining position to prevent gravitational movement of the instruments from said tray when the latter is in its discharging position.

5. Sterilizing apparatus according to claim 1 in which the discharge end of said tray is pivotally connected to said tank at a point adjacent said receptacle.

6. Sterilizing apparatus for surgical instruments comprising a sterilizing tank, guideways on opposed vertical walls of said tank and having portions inclined with respect to the vertical, an instrument tray within said tank, roller carrying members fixedly mounted to said tray, at least two rollers rotatably mounted on each of said members and located in said guideways, and means to elevate said tray from within said tank and to move said rollers into the inclined portions of the guideways to cause said tray to tilt when elevated.

7. Sterilizing apparatus comprising a tank having a discharge end and a stop member along the upper edge of said tank, means for supporting said tray in a sterilizing position in said tank

and in a discharging position in which the discharge end of said tray engages said stop member and the opposite end of said tray is elevated with respect to said discharge end, and means for moving said tray between said two positions.

8. Sterilizing apparatus comprising a tank, a tank cover member pivotally mounted on said tank, an auxiliary receptacle adjoining said tank, a counterbalanced receptacle cover pivotally mounted on said receptacle, said covers having closed positions in which said tank cover has a projecting part extending under said receptacle cover for engagement therewith, means including an operating lever and linkage arrangement connected to said tank cover for pivoting said tank cover to an open position and thereby pivoting said receptacle cover to an open position as a result of the engagement of the two covers when closed, an instrument tray having a bottom and a discharge end, means for supporting said instrument tray in a sterilizing position within said tank when the tank cover is closed and in an instrument discharging position when the tank cover is open, and in which discharging position the tray is located above the tank with the bottom of the tray inclined downwardly toward the discharge end, and a connection between said tray and said cover member for coordinating movement of said tray with pivotal movement of the tank cover between closed and open position.

9. Sterilizing apparatus as provided for in claim 8, wherein the tank is provided with vertical side walls, spring elements on said walls for frictional engagement with parts of the tray to resist elevating movement of the tray, a lever guide, and means on said guide for engagement by the lever to maintain this tray in a partly elevated position as defined by the engagement of the tray with the spring elements.

HYMAN FREEDMAN.

REFERENCES CITED

The following references are of record in the file of this patent:

UNITED STATES PATENTS

Number	Name	Date
1,252,571	Holmes	Jan. 8, 1918
1,479,236	Heidbrink	Jan. 1, 1924
1,538,571	Meinecke et al.	May 19, 1925
1,939,713	Meitler	Dec. 19, 1933