(19) Europäisches Patentamt
European Patent Office
Office européen des brevets

(11) **EP 2 713 806 B1**

(12) **EUROPEAN PATENT SPECIFICATION**

(45) Date of publication and mention of the grant of the patent:
**04.03.2015 Bulletin 2015/10**

(21) Application number: **13774814.1**

(22) Date of filing: **07.08.2013**

(51) Int Cl.:
***A45D 20/12*** *(2006.01)*

(86) International application number:
**PCT/IB2013/056454**

(87) International publication number:
**WO 2014/024143 (13.02.2014 Gazette 2014/07)**

(54) **HAIR DRYER WITH A DEVICE AT THE AIR OUTLET FOR CHANGING THE FLOW OF AIR**

HAARTROCKNER MIT EINER EINRICHTUNG AM LUFTAUSLASS ZUR VERÄNDERUNG DER LUFTSTRÖMUNG

SÈCHE-CHEVEUX AVEC UN DISPOSITIF À LA SORTIE D'AIR POUR CHANGER LE FLUX D'AIR

(84) Designated Contracting States:
**AL AT BE BG CH CY CZ DE DK EE ES FI FR GB GR HR HU IE IS IT LI LT LU LV MC MK MT NL NO PL PT RO RS SE SI SK SM TR**

(30) Priority: **09.08.2012 US 201261681171 P**

(43) Date of publication of application:
**09.04.2014 Bulletin 2014/15**

(73) Proprietor: **Koninklijke Philips N.V.**
**5656 AE Eindhoven (NL)**

(72) Inventor: **FLÖSSHOLZER, Hannes Uwe**
**5656 AE Eindhoven (NL)**

(74) Representative: **Steenbeek, Leonardus Johannes**
**Philips**
**Intellectual Property & Standards**
**P.O. Box 220**
**5600 AE Eindhoven (NL)**

(56) References cited:
**GB-A- 2 093 343**
**JP-U- S6 348 503**
**US-A- 4 097 722**
**US-A- 5 790 749**
**US-A1- 2006 098 962**

Note: Within nine months of the publication of the mention of the grant of the European patent in the European Patent Bulletin, any person may give notice to the European Patent Office of opposition to that patent, in accordance with the Implementing Regulations. Notice of opposition shall not be deemed to have been filed until the opposition fee has been paid. (Art. 99(1) European Patent Convention).

EP 2 713 806 B1

Printed by Jouve, 75001 PARIS (FR)

## Description

### FIELD OF THE INVENTION

**[0001]** The present invention relates to the field of hair dryers, and more specifically to an air outlet arrangement.

### BACKGROUND OF THE INVENTION

**[0002]** A hair dryer is a device for drying hair by blowing heated air over the hair in order to accelerate the evaporation of water. An electrical hair dryer typically comprises a housing with an air inlet and an air outlet, a fan for generating a flow of air from the air inlet to the air outlet and a heating element for heating the flow of air. Nozzles, also referred to as concentrators, are optionally positioned at the air outlet, for example to increase the air speed for styling purposes. The user of a hair dryer with attached nozzle has the impression that the dryer is more "powerful" than without nozzle.

**[0003]** For quick drying, a strong heating power is desirable. At the beginning of the evaporation process, the water held by the hair forms a thermal screen which prevents deterioration or burning of the hair or the scalp. As the water evaporates, it will be less and less of a screen. At high temperatures, the hair can be damaged and/or a burning sensation may arise, which may even lead to actual burning. The problem is to achieve fast drying without damaging the hair.

**[0004]** Especially when styling hairs with a brush, many users come very close to the hair with the air outlet or nozzle. If they get too close, for example less than 2 cm, the hair may be (partly) shutting off the air outlet area which reduces the air flow significantly. A nozzle does not only affect an increase of air speed but also forms a resistance for the air stream as well. The resistance can cause a reduction of the rotation speed of the fan and decrease the air flow. The decreased air flow corresponds to a lower air mass per unit time which passes the heating element. In consequence, the lower air mass is heated up to a higher temperature. The air temperature can increase up to potentially dangerous, hair damaging values. Implementations according to the prior art suggest adapting the fan speed and/or heating power to solve the problem of overheating.

**[0005]** US 5,790,749 discloses an electrical hair dryer with a sensor that measures the temperature of the hair and controls a fan speed of the fan and a heating power of the heating element to prevent overheating and damaging the hair. When the temperature of the hair gets too hot the fan speed and the heating power can be reduced. However, the solution proposed in US 5,790,749 involves additional effort for sensing and control circuitry. This leads to a high complexity of today's hair dryers and increases the overall costs.

**[0006]** JPU1988048503 addresses the problem that a distance between an object to be dried and the air outlet is not always fixed but often varies. Therefore, for example, if the air outlet is moved closer to the object to be dried, the blow ventilation resistance increases, and an air supply amount of the fans is generally reduced with the increase in ventilation resistance, and hence the blow temperature rises when a fixed quantity of heat is transferred to this reduced air amount from the heater unit. That is, the temperature of the blow hot air changes in accordance with the distance between the object to be dried and the hair dryer, adjusting the wind volume adjustment ring each time is actually impossible, and hence this adjustment is inconvenient for the object to be dried that requires the hot air with a fixed temperature. JPU1988048503 therefore discloses a wind collecting nozzle of a hair dryer, that is disposed at a tip of a hair dryer and collects blow hot air from the hair dryer, the wind collecting nozzle comprising wind volume changing means for changing a blow wind volume in accordance with a temperature of the blow hot air. The wind volume changing means comprise: a pair of dampers that are disposed on both side surfaces of the wind collecting nozzles so as to be openable and closable; a first spring that is provided between the pair of dampers and constantly works in a direction to close the pair of dampers; and a second spring that is provided between the pair of dampers and made of a shape memory alloy that produces force to open the pair of dampers against force of the first spring when the blow hot air has reached a predetermined temperature.

### SUMMARY OF THE INVENTION

**[0007]** It is an object of the present invention to provide a hair dryer that mitigates an overheating of hair and having a reduced complexity and cost. The invention is defined by the independent claims. The dependent claims define advantageous embodiments.

**[0008]** In a first aspect of the present invention an electrical hair dryer is presented that comprises a housing with an air inlet and an air outlet arrangement, a fan for generating a flow of air from the air inlet to the air outlet arrangement and a heating element for heating the flow of air. The air outlet arrangement comprises a flow changing device for changing a flow of air at the air outlet arrangement depending on a pressure within the housing.

**[0009]** In a further aspect of the present invention a nozzle for a hair dryer is presented that comprises a flow changing device for changing a flow of air at the nozzle depending on a pressure within the nozzle. The nozzle can be part of an air outlet arrangement of an electrical hair dryer. The nozzle can be an integral part of the housing or formed as a separate part that can be attached to the hair dryer. It is to be noted that the term "nozzle" is to be understood as any type of air outlet arrangement. A "nozzle" in the sense of the present disclosure also includes a diffuser or an extension part that is attached to the front part of a hair dryer.

**[0010]** Instead of controlling the fan speed or heating power as proposed in US 5,790,749, the inventors have

identified an alternative solution to prevent an overheating of hair. The hair dryer according to the present invention comprises a housing with an air outlet arrangement that comprises a flow changing device for changing a flow of air at the air outlet arrangement depending on a pressure within the housing. Instead of electrically controlling fan speed and heating power, the air outlet arrangement according to the present invention features additional structural elements that modify the flow of air. These structural elements, referred to as flow changing device, alter the flow of air at the air outlet arrangement either by changing the direction of the flow of air or by providing alternative pathways for the flow of air. For example if an obstacle such as a brush with hair blocks an opening of the air outlet arrangement, the flow of air can be guided away from the obstacle by changing the flow direction. This way, the flow of air can freely pass by the obstacle. Alternatively, the flow changing device provides additional pathways. For example, if one pathway is blocked or at least partially blocked, the heated air can exit through an alternative opening of the air outlet arrangement.

**[0011]** The term "air outlet arrangement" as used within the context of the present invention is to be understood as a part of the housing of the hair dryer preferably a front part of the housing. Optionally a nozzle is part of the air outlet arrangement. The air outlet arrangement comprises one ore more air outlet openings through which air can exit the housing. The simplest example of an air outlet arrangement is one air outlet opening of disk shape through which the entire flow of air from the air inlet exits the housing. Alternatively, the air outlet arrangement comprises a plurality of air outlet openings. One or more of the air outlet openings can be located on a side of the housing. Further, the air outlet arrangement can comprise a flow guiding device for guiding the flow of air to desired air outlet openings. A "nozzle" as used within the context of the present invention can comprise similar features.

**[0012]** According to the present invention, an effective cross section of the air outlet arrangement is automatically increased above a pressure threshold. The term "effective cross section" as used within the context of the present invention relates to the sum of the cross sections or areas of the one or more openings of the air outlet arrangement for letting out air.

**[0013]** If an obstacle (partially) blocks an opening of the air outlet arrangement, the air flow that can exit the air outlet arrangement is reduced. The decreased air flow corresponds to a lower air mass per unit time which passes the heating element. In consequence, the lower air mass is heated up to a higher temperature. Experiments of the applicant have shown that thermal damages of the hair may already occur at a temperature of 100°C. At higher temperatures up to 200°C heavy burnings of the hair and the scalp can be caused.

**[0014]** Since the air outlet area is increased by increasing the effective cross section of the air outlet arrangement, a larger air mass passes the heating element and exits the hair dryer. This larger air mass can only be heated to a lower temperature given that the heating power remains unchanged. Below the damage threshold, there is no need to change air flow at the air outlet arrangement. The pressure within the air outlet arrangement is indicative of the flow of air that exits the air outlet arrangement and also indicative of the air temperature.

**[0015]** An air outlet arrangement with a nozzle typically has a limited effective cross section during normal operation in order to ensure a fast, powerful stream of air. When styling hairs with a brush, a user may come too close to the hair with the nozzle and block a substantial part of the cross section. In consequence the air flow that exits the housing through the air outlet arrangement reduces even more. As explained above, the reduced amount of air that now passes the heating element is heated up to a higher temperature. Furthermore, the pressure within the housing increases as the obstacle increases the resistance for the flow of air. In the present embodiment, the flow changing device of the air outlet arrangement change the flow of air that exits the outlet arrangement by increasing the effective cross section of the air outlet arrangement. In consequence, the flow of air increases. As the effective cross section of the air outlet arrangement is increased, the flow of air is not limited to exiting the air outlet arrangement through a narrow space besides the obstacle (e.g. a brush) but has a pathway of larger effective cross section. The heating power of the heating element heats up the air mass that passes the heating element. As the flow of air and thus the air mass is increased, the air temperature is reduced.

**[0016]** In this example, the effective cross section remains unchanged until reaching a pressure threshold. In a first example, the effective cross section has a first value below the pressure threshold and a second effective cross section above the pressure threshold. Alternatively, the effective cross section has a first value below the pressure threshold and increases continuously above said threshold. In a further alternative, the effective cross section increases in discrete steps above said threshold.

**[0017]** According to a further embodiment of the present invention the flow changing device comprises a mechanical shutter. For example, a mechanical flap acts as a shutter that at least partially covers an air outlet opening of the air outlet arrangement. At low pressure, the flap can be in closed state, whereas the flap continuously opens with increasing pressure. Any type of shutter can be used including flaps, slides or rotational shutters. The shutter is operable with a folding, sliding or rotational movement respectively. It goes without mentioning that any type of mechanical shutter can be used and that the operation of said shutters can be continuous, in small steps, or a binary change between opened and closed state. The mechanical shutter can also be combined with non-mechanic elements and further electrical, mechanical or electro-mechanical actuators.

**[0018]** According to another embodiment of the hair

dryer according to the present invention, the flow changing device further comprises a spring element for exerting a closing force on the mechanical shutter that counteracts an opening force on the mechanical shutter, which opening force is caused by the pressure within the housing. In this particular embodiment, the flow changing device change a flow of air at the air outlet arrangement depending on a pressure within the housing. For example, if an obstacle (partially) blocks an opening of the air outlet arrangement, the pressure within the housing increases. The pressure within the housing causes an opening force that presses against the mechanical shutter. The spring element of the flow changing device exerts a closing force on the mechanical shutter that tries to close the mechanical shutter or hold the mechanical shutter closed against the opening force. When the opening force caused by the pressure within the housing exceeds the closing force, the mechanical shutter opens. As described above, an opening of the mechanical shutter can increase the effective cross section of the air outlet arrangement. Hence, the flow of air can (partially) pass through the airway that was opened by the shutter. As the flow of air exits the housing, the pressure within the housing decreases. When the closing force exceeds the opening force, the shutter has returned to its closed position. The pressure threshold when the shutter opens can be set by the spring constant of the spring element.

**[0019]** According to an alternative embodiment, the hair dryer further comprises a pressure sensor and an electro-mechanical actuator for operating the flow changing device.

**[0020]** According to another embodiment of the present invention, the air outlet arrangement comprises a main air outlet and a bypass air outlet. The bypass air outlet is an alternative pathway to the main air outlet for the air stream to exit the air outlet arrangement. The bypass can be activated by an increase in pressure within the housing, for example when the air outlet is blocked.

**[0021]** The bypass air outlet can be arranged at any part of the air outlet arrangement other than the main air outlet. For the example of an electrical hair dryer, the bypass air outlet can be arranged at a main part of the housing or at the nozzle. In any case, the bypass air outlet is preferably arranged close to the main air outlet i.e. it is part of the air outlet arrangement.

**[0022]** According to another embodiment of the hair dryer, the bypass air outlet is adapted to act as a safety valve. The term "safety valve" refers to a device that ensures that a pressure within a system does not exceed a predetermined threshold and is adapted to release for example a stream of air from a housing. This additional release path ensures that the pressure within the housing return to a value below said threshold.

**[0023]** According to a further embodiment of the hair dryer, the bypass air outlet comprises a mechanical shutter, wherein the mechanical shutter is adapted to operate the bypass air outlet. In this example, the mechanical shutter at least partially closes the bypass air outlet. In one embodiment, the main air outlet does not feature a mechanical shutter and only the bypass air outlet features a mechanical shutter. Alternatively, both the main air outlet and the bypass air outlet comprise a mechanical shutter. Furthermore, a bypass air outlet can comprise a plurality of mechanical shutters or alternatively one shutter can be used for a plurality of bypass air outlets or a bypass air outlet and a main air outlet.

**[0024]** According to an alternative embodiment of the present invention, the bypass air outlet is configured to guide heated air substantially in direction of the main air outlet. This embodiment is particularly desirable to avoid a waste of heating power. Instead of reducing the heating power of the heating element as proposed in the prior art, this embodiment of the present invention maintains the heating power and distributes the heated air through a bypass air outlet. Even though the main air outlet may be covered, for example with hair on a brush, heated air that exits in direction of the main air outlet still serves to dry the surrounding hair. For example, an opening of the bypass air outlet is oriented in direction of the main air outlet. Hence, air that exits through this opening is guided in direction of the main air outlet. Alternatively, the mechanical shutter of the bypass air outlet acts as an air guide that guides the flow of air in direction of the main air outlet. For example a flap acts as an air guide. Alternatively, the air outlet arrangement features additional air guiding elements or baffles adapted to guide the air in substantially direction of the main air outlet in order to dry the surrounding hair.

**[0025]** In an alternative embodiment, the bypass air outlet is configured to guide heated air substantially away from the direction of the main air outlet. In this embodiment, the stream of air that exits through the bypass air outlet is guided away from the hair of the user in order to avoid disturbances that could negatively affect the hair style. For example, if the user already fixed their surrounding hair beside the main air outlet it is not desirable to have a flow of air onto said surrounding hair.

**[0026]** According to an alternative embodiment of the hair dryer according to the present invention, the heating element and/or the fan is configured such that an air temperature of the flow of air is limited to a maximum value, when the flow of air exits through the bypass air outlet only. Assuming that the main air outlet is completely blocked, the entire flow of air will exit through the bypass air outlet. Even in this extreme scenario, the air temperature does not cause damage to the hair or discomfort to the user. The power of the heating element and/or the fan speed is dimensioned such that even when the entire flow of air exits through the bypass air outlet only, an overheating is prevented. A bypass air outlet with large effective area will allow a higher maximum heating power.

**[0027]** According to yet another embodiment of the present invention, a direction of letting air out of the air outlet arrangement depends on the pressure within the housing. As an alternative to changing the effective cross

section of the air outlet arrangement for letting out air, the flow direction can be manipulated. For example, if an obstacle blocks the air outlet, a baffle can be used to steer the flow of air away from the obstacle. Similar to the above, said baffle can be operated by a spring element or an electro-mechanical actuator. A mechanical shutter or flap can act as a baffle. Alternatively a nozzle or part of a nozzle can swivel to the side away from the obstacle.

**[0028]** According to a further embodiment of the hair dryer, the flow changing device further comprises a fixation device for fixing the flow changing device in a desired position. This additional feature enables the user to overrule the automatic flow changing mechanism of the air outlet arrangement. This feature is particularly helpful for a skilled person who wants to have more control, for example over the air temperature. The operation of said fixation device can be continuous, in small steps, or a binary change between opened and closed state.

## BRIEF DESCRIPTION OF THE DRAWINGS

**[0029]** These and other aspects of the invention will be apparent from and elucidated with reference to the embodiments described hereinafter. In the following drawings

Fig. 1 shows a general technical concept of an electrical hair dryer,
Fig. 2a shows an air outlet arrangement according to the present invention during operation with closed flow changing device,
Fig. 2b shows the air outlet arrangement according to the present invention during operation with open flow changing device,
Figs. 3a and 3b show a second embodiment of the air outlet arrangement according to the present invention,
Figs. 4a and 4b show a third embodiment of the air outlet arrangement according to the present invention,
Figs. 5a and 5b show a fourth embodiment of the air outlet arrangement according to the present invention,
Figs. 6a to 6c show a fifth embodiment of the air outlet arrangement according to the present invention, and
Figs. 7a and 7b show a sixth embodiment of the air outlet arrangement according to the present invention.

## DETAILED DESCRIPTION OF EMBODIMENTS OF THE INVENTION

**[0030]** Fig. 1 shows an electrical hair dryer 100 comprising a housing 110 with an air inlet 111 and an air outlet arrangement 112. In this particular embodiment the air outlet arrangement 112 also features a nozzle 113. The nozzle 113 is optional. In the housing 110 there are a fan 120 and a heating element 130. The fan 120 generates a flow of air from the air inlet 111 to the air outlet arrangement 112. Any type of air flow generating device can be used as a fan. The heating element 130 heats the flow of air. Different types of heating elements are available for example coils of wire with high electric resistivity such as nichrome wires, infrared heaters and ceramic heating elements. The fan speed is controlled via a fan control switch 122 that allows to set the fan speed. The heating power of the heating element 130 is controlled via a heat control button 132. In this embodiment it is possible to control fan speed and heating power independently from each other. However, in a different embodiment there can be a joint control element or a simple on/off button.

**[0031]** Fig. 2a shows an electrical hair dryer and more particularly an air outlet arrangement 220 according to the present invention during operation.

**[0032]** A flow of heated air 230 is directed onto the hair 201 of a user 200. The flow of air 230 exits the air outlet arrangement 220 through a main air outlet 221. Further, the air outlet arrangement 220 according to the present embodiment of the invention features an upper flow changing device 223 and a lower flow changing device 224. Alternatively only a single flow changing device 223 or a plurality of more than two flow changing devices can be used. The flow changing devices 223, 224 are implemented as flaps.

**[0033]** In Fig. 2a, the flap remains in closed position. The main air outlet 221 is located at a distance from the hair 221 of the user 200 such that the flow of air 230 can freely exit the air outlet arrangement 220 through the main air outlet 221. Hence, the flow of air 230 can exit the air outlet arrangement 220 without being blocked and thus without an increased dynamic pressure P1 within the air outlet arrangement 220 as a part of the housing of the hair dryer. In consequence, the amount of air that flows by the heating element does not get overheated and stays in a safe temperature range.

**[0034]** In Fig. 2b, the user 200 uses a round brush 210 for styling, in particular for curling hair ends. When the air outlet arrangement 220 gets too close to the brush 210, the brush 210 acts as an obstacle that shuts off at least a part of the main air outlet 221. In consequence the flow of air 231 at the main air outlet 221 is blocked. In consequence the pressure P2 of the air within the air outlet arrangement 220 increases. Furthermore, less air passes by the heating element such that also the temperature increases. In addition to the main air outlet 221, the air outlet arrangement 220 features an upper bypass air outlet 225 and a lower bypass air outlet 226 that are covered by an upper flow changing device 223 and a lower flow changing device 224 respectively. The flow changing devices are adapted to act as a safety valve. The flow changing devices 223, 224 are implemented as a mechanical shutter in form of a flap that covers the bypass openings 225, 226.

**[0035]** In Fig. 2a, with low pressure P1 within the air outlet arrangement 220, these flaps are in closed position, entirely covering the bypass air outlets 225, 226. In Fig. 2b, with higher air pressure P2 within the air outlet arrangement 220, the flaps open and allow the flow of air 232 to exit through the bypass air outlets 225, 226. In consequence the air flow through the hair dryer from the air inlet to the air outlet arrangement increases and also the amount of air passing the heating element increases. Thereby, the heating power of the heating element is absorbed by a larger air mass that is heated to the lower temperature. In particular the temperature is below a temperature value that would cause damage to the hair 201 and/or discomfort to the user 200.

**[0036]** In other words, when both the main air outlet 221 and the bypass air outlets 225, 226 are open, the effective cross section of the air outlet arrangement 220 for letting out air is increased.

**[0037]** In one embodiment, the size of the bypass air outlets 225, 226 is selected such that the air temperature is limited to a non-damaging maximum temperature value when the flow of air 232 exists through the bypass air outlets 225, 226 only. Alternatively, the size of the single air outlet 225 can be selected accordingly to prevent an overheating.

**[0038]** In the example shown in Fig. 2b, the bypass air outlets 225, 226 are configured to guide the heated air substantially in direction of the main air outlet 221. Even though the main air outlet 221 which is directed at the hair 201 of the user 200 is partly or completely blocked, the flow of heated air 232 that exits the air outlet arrangement 220 through the bypass air outlets 225, 226 is still guided towards the hair 201 of the user 200. In many known hair dryers, the heating power and/or fan speed are reduced, when it is detected that the hair 201 is overheating. Hence, the power of the known hair dryer is reduced such that the potential power of the hair dryer is not fully exploited. The hair dryer according to the present invention does not require a reduction of power but opens an alternative pathway for the flow of air 230, 232 to be guided in direction of the hair 201 of the user 200. Thus, the hair dryer according to the present invention can reduce the drying time.

**[0039]** Figs. 3a and 3b show a more detailed cross section of an air outlet arrangement 300. The air outlet arrangement 300 comprises a front part 320 of the housing and an optional nozzle or concentrator 310 to increase the air speed. The nozzle 310 is attached to the front part of the housing 320 by a clip mechanism 311. Alternative attachment devices such as a thread or latches are possible.

**[0040]** In this embodiment, the flow changing device is not integrated into the nozzle but into the front part of the housing 320 of the dryer. This way, the flow changing device can change a flow of air at the air outlet arrangement 300 also if the device is operated without the nozzle 310.

**[0041]** In Figs. 3a and 3b, an upper flow changing device is implemented by a flap 331 that acts a mechanical shutter of a bypass opening 334, a hinge or joint 332 that connects the flap 331 with the sidewall of the front part 320 of the housing. Alternatively, as shown with the lower flow changing device, a thermal actuator 343 can be used for operating a flap 341 that acts as a mechanical shutter of a bypass opening 344.

**[0042]** Referring to the upper flow changing device, the spring 333 exerts a closing force $F_{S1}$ on the flap 331 that holds the flap closed against a first opening force $F_{P1}$ on the flap 331. The opening force $F_{P1}$ is caused by a pressure P1 within the housing. In Fig. 3a, the opening force $F_{P1}$ is smaller than the closing force $F_{S1}$.

**[0043]** In Fig. 3b, an obstacle 390 blocks a main air outlet 312. As described above, the pressure within the air outlet arrangement 300 increases to a pressure P2. As the pressure within the air outlet arrangement 300 increases, the opening force that acts on the mechanical shutter 331 increases. At the threshold when the opening force $F_{P2}$ exceeds the closing force $F_{S1}$ from the spring 333, the flap 331 opens and enables a flow of air 335 to exit through the bypass air outlet 334. The flap opens to a state where the opening force $F_{P2}$ and the closing force $F_{S2}$ are equal. It the pressure within the housing is reduced, e.g. when the obstacle 390 is removed, the flap 331 closes again.

**[0044]** The flap 341 is operated by a thermal actuator 343. During normal operation without obstacle 390, the temperature within the air outlet arrangement 300 is at temperature T1. The thermal actuator 343 holds the flap 341 in a closed position. When an obstacle 390 blocks the main air outlet 312, the air inside the air outlet arrangement 300 is heated to a higher temperature T2 that causes a temperature dependent deformation of the thermal actuator 343. In this example, the thermal actuator 343 is implemented as bi-metallic strip. The flap 341 is coupled to the thermal actuator 343 such that the flap 341 opens as the thermal actuator deforms. This opens a bypass air outlet 344 that enables the flow of air 345 to exit the air outlet arrangement 300. In consequence, the flow of air out of the air outlet arrangement 300 increases, the air mass passing the heating element increases and thereby the temperature of the flow of air reduces. This reduction of air temperature prevents or at least reduces damage to the hair of the user.

**[0045]** In the example shown in Figs. 3A and 3B, the upper flow changing device changes the flow of air at the air outlet arrangement depending on the pressure P within the air outlet arrangement. The lower flow changing device changes the flow of air at the air outlet arrangement depending on the temperature T within the air outlet arrangement. This is particularly beneficial if the temperature and the air speed of the hair dryer can be selected independent from each other. Alternatively, both flow changing devices change the flow of air depending on the pressure. In another embodiment, a shutter is operated depending on the temperature and the pressure in parallel. The latter can be beneficial for a hair dryer within

independent fan speed control 122 and heating element control 132.

**[0046]** Figs. 4a and 4b show an alternative embodiment of an air outlet arrangement 400 according to the present invention. The air outlet arrangement 400 comprises the front part of the housing 420 and a nozzle 410. In this embodiment, the flow changing devices are implemented in the nozzle 410. Implementing the flow changing devices in a nozzle 410 is an advantage of the present invention over the prior art, because an existing device can be retrofitted with a nozzle 410 according to the present invention. The nozzle 410 comprises a fixed portion 432 and a mechanical shutter implemented as a slider 431. The fixed portion 432 comprises an opening 435. The slider 431 comprises an opening 434. When there is no obstacle 490 in front of the main air outlet 412, the pressure within the air outlet arrangement 400 is P1. This pressure P1 causes an opening force $F_{P1}$ on the slider 431. A spring element 433 connecting the slider 431 to the fixed portion 432 of the nozzle 410 exerts a counteracting, closing force $F_{S1}$ on the slider. Without obstacle 490 in front of the main air outlet 412, the closing force $F_{S1}$ exceeds the opening force $F_{P1}$.

**[0047]** In Fig. 4b an obstacle 490 partially blocks the main air outlet 412 such that only a reduced flow of air 436 can exit the air outlet arrangement 400 through the main air outlet 412. In consequence, the pressure P2 within the air outlet arrangement 400 increases and also causes an increase of the opening force $F_{P2}$ causing the slider 431 to slide to the side. In this configuration, the slider opening 434 slides over the opening 435 of the fixed portion 432 of the nozzle 410. Both openings 434, 435 now form a bypass air outlet that allows a flow of air 437 to exit the nozzle 410 of the air outlet arrangement 400. The pressure and temperature within the air outlet arrangement are affected accordingly and thereby prevent overheating.

**[0048]** In this embodiment, the flow of air 437 exits to the side of the nozzle 410 and is not guided in direction of the main air outlet 412. This can be desirable especially during hair styling in order to prevent disturbances that could mix up the hair.

**[0049]** Figs. 5a and 5b show a similar embodiment with a slider 531 and a fixed portion 532 of the air outlet arrangement 500. In this embodiment, a flow of air 537 existing through a bypass air outlet 538 is guided substantially in direction of the main air outlet in order to dry the surrounding hair.

**[0050]** Figs. 6a to 6c show a fifth embodiment of an air outlet arrangement according to the present invention. A single air outlet 612 changes a flow of air at the air outlet arrangement 600 by changing the opening of the air outlet 612 depending on a pressure within the air outlet arrangement 600. The air outlet arrangement 600 comprises a base 630, an upper jaw 631 and a lower jaw 632 that are movably attached to the base 630. Between the upper jaw 631 and the lower jaw 632 there is a wall element 633 that prevents air from leaking out at the side between the jaws. The sidewall 633 may be made from a material that expands with increasing temperature and contracts with decreasing temperature. Hence, if an obstacle 690 blocks the air outlet 612 and thereby causes an increase in temperature, the sidewall 633 widens and thereby causes the jaws 631 and 632 to separate further. This increases the effective cross section of the air outlet 612 and allows the stream of air to (partially) pass by the obstacle 690. In consequence, the temperature of the flow of air is reduced.

**[0051]** In this fifth embodiment, the upper jaw 631 and the lower jaw 632 are held closed by a spring 640. Figs. 6b and 6c show a front view of the air outlet arrangement. The pressure P1 within the air outlet arrangement exerts an opening force $F_{P1}$ on the jaws that is counteracted by a closing force $F_{S1}$ from the spring element 640. As the pressure within the air outlet arrangement 600 increases, the opening force increases to $F_{P2}$. The opening of the air outlet arrangement widens as shown in Fig. 6c. As the spring element 640 is stretched, also the closing force $F_{S2}$ increases until reaching a balance of forces, wherein $F_{P2}$ equals $F_{S2}$.

**[0052]** The upper sidewall 634 and lower sidewall 635 at the side of the air outlet 612 prevent air from leaking out to the side. Alternatively, also the sidewalls comprise openings to form an additional air outlet similar to the embodiment shown in Figs. 4a and 4b as they move with respect to each other.

**[0053]** Instead of using a dedicated spring element as shown in Figs. 6b and 6c, it is of course possible to use a sidewall 633 made from an elastic material that acts as a spring. Alternatively, a spring can be mounted at the joint 637 similar to the embodiment shown in Figs. 3a and 3b.

**[0054]** In a further alternative of the embodiment shown in Fig. 6a, the lower jaw 632 is fixed to the base 630 and only the upper jaw 631 is movably attached to the base 630. In addition to increasing the effective cross section of the air outlet 612, a pressure dependent movement of the upper jaw 631 also changes a direction of letting air out of the air outlet arrangement 600. In this embodiment, the flow of air is partly guided over the obstacle 690 when the upper 631 jaw opens.

**[0055]** Furthermore, the joint 637 optionally comprises locking mechanism 638 for fixing the upper jaw 631 and the lower jaw 632 in a fixed position. This enables the user to selectively disable the automatic movement of the upper jaw 631 and/or lower jaw 632. A fixation can be desirable, if the user wants to overrule the automatic adjustment of the flow changing device.

**[0056]** Figs. 7a and 7b show a sixth embodiment of an air outlet arrangement 700 according to the present invention. This embodiment comprises a temperature sensor 711, and a pressure sensor 712. The flow changing device is implemented as a disk 720 that can be rotated with a motor 713 with respect to a front part 730 of the air outlet arrangement 700 depending on a pressure and/or temperature within the air outlet arrangement 700.

As shown in Fig. 7b, the front part 730 comprises an oval main air outlet 732 and a plurality of bypass air outlets 733 that are arranged adjacent to the main air outlet 732. The disk-like flow changing device 720 comprises a main opening 722 and bypass air outlets 723. During normal operation when there is no obstacle in front of the main air outlet 732, the disk 720 is rotated with respect to the front part 730 such that the main air outlet 732 is in front of the main opening 722 of the disk 720. The disk 720 is arranged inside the front part 730 in close proximity to the surface 735 of the front part 730. Further, the disk is rotated such that bars 724 of the disk 720 overlap the bypass air outlets 733 of the front part 730 and that the bars 734 of the front part 730 overlap to the bypass air outlets 723 of the disk 720. Hence, the bypass air outlets are completely blocked. As the pressure within the air outlet arrangement 700 increases, the disk 720 can be gradually rotated with respect to the front part 730 such that the bypass air outlets 733 of the front parts 730 are on top of the bypass air outlets 723 of the disk 720. Correspondingly, the bars 734 of the front part 730 are on top of the bars 724 of the disk 720. This way, the openings 723 and 733 form a plurality of bypass air outlets when arranged on top of each other. Alternatively, the openings 723 and 733 are partially rotated on top of each other to partially increase the effective cross section of the air outlet opening of the air outlet arrangement 700.

**[0057]** Of course an electro-mechanical actuator could also be used for operating a mechanical shutter of the air outlet arrangement in form of a flap or a slider depending on a pressure within the air outlet arrangement.

**[0058]** While the invention has been illustrated and described in detail in the drawings and foregoing description, such illustration and description are to be considered illustrative or exemplary and not restrictive; the invention is not limited to the disclosed embodiments. Other variations to the disclosed embodiments can be understood and effected by those skilled in the art in practicing the claimed invention, from a study of the drawings, the disclosure, and the appended claims. In the claims, the word "comprising" does not exclude other elements or steps, and the indefinite article "a" or "an" does not exclude a plurality. A single element or other unit may fulfill the functions of several items recited in the claims. The mere fact that certain measures are recited in mutually different dependent claims does not indicate that a combination of these measures cannot be used to advantage. Any reference signs in the claims should not be construed as limiting the scope.

## Claims

**1.** An electrical hair dryer (100) comprising:

- a housing (110) with an air inlet (111) and an air outlet arrangement (112, 220, 300, 400, 500, 600, 700),
- a fan (120) for generating a flow of air (230, 231, 232, 335, 345, 436, 437, 537) from the air inlet (111) to the air outlet arrangement (112, 220, 300, 400, 500, 600, 700),
- a heating (130) element for heating the flow of air (230, 231, 232, 335, 345, 436,437,537),

wherein the air outlet arrangement (112, 220, 300, 400, 500, 600, 700) comprises a flow changing device (223, 224, 331, 341, 431, 531, 631, 632) for changing a flow of air (230, 231, 232, 335, 345, 436, 437, 537) at the air outlet arrangement (112, 220, 300, 400, 500, 600, 700) depending on a pressure (P1, P2) within the housing (110),
wherein an effective cross section of the air outlet arrangement (112, 220, 300, 400, 500, 600, 700) is automatically increased above a pressure threshold.

**2.** The hair dryer according to claim 1,
wherein the flow changing device comprises a mechanical shutter (223, 224, 331, 341, 431, 531,631,632).

**3.** The hair dryer according to claim 2,
wherein the flow changing device (223, 224, 331, 341, 431, 531, 631, 632) further comprises a spring element (333, 433, 640) for exerting a closing force ($F_{S1}$, $F_{S2}$) on the mechanical shutter that counteracts an opening force ($F_{P1}$, $F_{P2}$) on the mechanical shutter, which opening force ($F_{S1}$, $F_{S2}$) is caused by the pressure (P1, P2) within the housing (110).

**4.** The hair dryer according to claim 2,
wherein the flow changing device (431, 631, 632) further comprises a thermo actuator (434) for operating the mechanical shutter wherein said thermo actuator (434) is adapted to change its form depending on the temperature (T1, T2).

**5.** The hair dryer according to claim 1,
further comprising a pressure sensor (712) and an electro-mechanical actuator (713) for operating the flow changing device (720, 730).

**6.** The hair dryer according to claim 1,
wherein the air outlet arrangement (112, 220, 300, 400, 500, 600, 700) comprises a main air outlet (221, 312, 412) and a bypass air outlet (225, 226, 334, 344, 538).

**7.** The hair dryer according to claim 6,
wherein the bypass air outlet (225, 226, 334, 344, 538) is adapted to act as a safety valve.

**8.** The hair dryer according to claim 2,
wherein the mechanical shutter (223, 224, 331, 341, 431, 531) is adapted to operate a bypass air outlet (225, 226, 334, 344, 538).

**9.** The hair dryer according to claim 6, wherein the bypass air outlet (225, 226, 538) is configured to guide heated air substantially in direction of the main air outlet (221).

**10.** The hair dryer according to claim 6, wherein the heating element (130) and/or the fan (120) is configured such that an air temperature of the flow of air is limited to a maximum value, when the flow of air exits through the bypass (225, 226, 334, 344, 538) air outlet only.

**11.** The hair dryer according to claim 1, wherein a direction of letting air out of the air outlet arrangement (112, 220, 300, 400, 500, 600, 700) depends on the pressure (P1, P2) within the housing (110).

**12.** The hair dryer according to claim 1, wherein the flow changing device (631, 632) further comprises a fixation device (638) for fixing the flow changing device (631, 632) in a desired position.

**13.** A nozzle for a hair dryer, wherein the nozzle (113, 310, 410) comprises an air outlet arrangement (112, 220, 300, 400, 500, 600, 700) according to any of claims 1 to 12.

**Patentansprüche**

**1.** Elektrischer Haartrockner (100), umfassend:

ein Gehäuse (110) mit einem Lufteinlass (111) und einer Luftauslass-Anordnung (112, 220, 300, 400, 500, 600, 700),
ein Gebläse (120) zur Erzeugung eines Luftstroms (230, 231, 232, 335, 345, 436, 437, 537) vom Lufteinlass (111) zur Luftauslass-Anordnung (112, 220, 300, 400, 500, 600, 700),
ein Heizelement (130) zur Heizung des Luftstroms (230, 231, 232, 335, 345, 436, 437, 537),
wobei die Luftauslass-Anordnung (112, 220, 300, 400, 500, 600, 700) eine Strömungsveränderungsvorrichtung (223, 224, 331, 341, 431, 531, 631, 632) umfasst, um den Luftstrom (230, 231, 232, 335, 345, 436, 437, 537) an der Luftauslass-Anordnung (112, 220, 300, 400, 500, 600, 700) in Abhängigkeit von einem Druck (P1, P2) im Gehäuse (110) zu ändern,
wobei ein effektiver Querschnitt der Luftauslass-Anordnung (112, 220, 300, 400, 500, 600, 700) automatisch über eine Druckschwelle erhöht wird.

**2.** Haartrockner nach Anspruch 1, wobei die Strömungsänderungsvorrichtung einen mechanischen Verschluss (223, 224, 331, 341, 431, 531, 631, 632) umfasst.

**3.** Haartrockner nach Anspruch 2, wobei die Strömungsänderungsvorrichtung (223, 224, 331, 341, 431, 531, 631, 632) weiter ein Federelement (333, 433, 640) umfasst, um eine Verschlusskraft ($F_{S1}$, $F_{S2}$) auf den mechanischen Verschluss auszuüben, der einer Öffnungskraft ($F_{P1}$, $F_{P2}$) auf dem mechanischen Verschluss entgegenwirkt, wobei die Öffnungskraft ($F_{S1}$, $F_{S2}$) durch den Druck (P1, P2) im Gehäuse (110) hervorgerufen wird.

**4.** Haartrockner nach Anspruch 2, wobei die Strömungsänderungsvorrichtung (431, 631, 632) weiter eine thermische Betätigungsvorrichtung (434) umfasst, um den mechanischen Verschluss zu betätigen, wobei die thermische Betätigungsvorrichtung (434) ausgelegt ist, um ihre Form in Abhängigkeit von der Temperatur (T1, T2) zu ändern.

**5.** Haartrockner nach Anspruch 1, weiter umfassend einen Drucksensor (712) und eine elektro-mechanische Betätigungsvorrichtung (713) um die Stömungsänderungsvorrichtung (720, 730) zu betätigen.

**6.** Haartrockner nach Anspruch 1, wobei die Luftauslass-Anordnung (112, 220, 300, 400, 500, 600, 700) einen Haupt-Luftauslass (221, 312, 412) und einen Bypass-Luftauslass (225, 226, 334, 344, 538) umfasst.

**7.** Haartrockner nach Anspruch 6, wobei der Bypass-Luftauslass (225, 226, 334, 344, 538) ausgelegt ist, um als Sicherheitsventil zu dienen.

**8.** Haartrockner nach Anspruch 2, wobei der mechanische Verschluss (223, 224, 331, 341, 431, 531) ausgelegt ist, um einen Bypass-Luftauslass (225, 226, 334, 344, 538) zu betätigen.

**9.** Haartrockner nach Anspruch 6, wobei der Bypass-Luftauslass (225, 226, 538) konfiguriert ist, um erhitzte Luft im Wesentlichen in Richtung des Haupt-Luftauslasses (221) zu leiten.

**10.** Haartrockner nach Anspruch 6, wobei das Heizelement (130) und/oder das Gebläse (120) derart konfiguriert ist, dass eine Lufttemperatur des Luftstroms auf einen maximalen Wert begrenzt ist, wenn der Luftstrom nur durch den Bypass-Luftauslass (225, 226, 334, 344, 538) austritt.

**11.** Haartrockner nach Anspruch 1, wobei eine Richtung zum Auslass von Luft aus der

Luftauslass-Anordnung (112, 220, 300, 400, 500, 600, 700) vom Druck (P1, P2) im Gehäuse (110) abhängt.

**12.** Haartrockner nach Anspruch 1, wobei die Strömungsänderungsvorrichtung (631, 632) weiter eine Fixierungsvorrichtung (638) umfasst, um die Stömungsänderungsvorrichtung (631, 632) in einer gewünschten Position zu fixieren.

**13.** Düse für einen Haartrockner, wobei die Düse (113, 310, 410) eine Luftauslass-Anordnung (112, 220, 300, 400, 500, 600, 700) nach einem der Ansprüche 1 bis 12 umfasst.

**Revendications**

**1.** Sèche-cheveux électrique (100), comprenant :

un boîtier (110) avec une entrée d'air (111) et un agencement de sortie d'air (112, 220, 300, 400, 500, 600, 700),
un ventilateur (120) pour générer un écoulement d'air (230, 231, 232, 335, 345, 436, 437, 537) de l'entrée d'air (111) à l'agencement de sortie d'air (112, 220, 300, 400, 500, 600, 700),
un élément chauffant (130) pour chauffer l'écoulement d'air (230, 231, 232, 335, 345, 436, 437, 537),
dans lequel l'agencement de sortie d'air (112, 220, 300, 400, 500, 600, 700) comprend un dispositif de changement d'écoulement (223, 224, 331, 341, 431, 531, 631, 632) pour changer un écoulement d'air (230, 231, 232, 335, 345, 436, 437, 537) au niveau de l'agencement de sortie d'air (112, 220, 300, 400, 500, 600, 700) en fonction d'une pression (P1, P2) à l'intérieur du boîtier (110),
dans lequel une section transversale efficace de l'agencement de sortie d'air (112, 220, 300, 400, 500, 600, 700) est automatiquement augmentée au-dessus d'un seuil de pression.

**2.** Sèche-cheveux selon la revendication 1, dans lequel le dispositif de changement d'écoulement comprend un volet mécanique (223, 224, 331, 341, 431, 531, 631, 632).

**3.** Sèche-cheveux selon la revendication 2, dans lequel le dispositif de changement d'écoulement (223, 224, 331, 341, 431, 531, 631, 632) comprend en outre un élément à ressort (333, 433, 640) pour exercer une force de fermeture ($P_{S1}$, $F_{S2}$) sur le volet mécanique qui contre une force d'ouverture ($F_{P1}$, $F_{P2}$) sur le volet mécanique, laquelle force d'ouverture ($F_{S1}$, $F_{S2}$) est entraînée par la pression (P1, P2) à l'intérieur du boîtier (110).

**4.** Sèche-cheveux selon la revendication 2, dans lequel le dispositif de changement d'écoulement (431, 631, 632) comprend en outre un thermo-actionneur (434) pour actionner le volet mécanique, dans lequel ledit thermo-actionneur (434) est adapté pour changer sa forme en fonction de la température (T1, T2).

**5.** Sèche-cheveux selon la revendication 1, comprenant en outre un capteur de pression (712) et un actionnement électromécanique (713) pour actionner le dispositif de changement d'écoulement (720, 730).

**6.** Sèche-cheveux selon la revendication 1, dans lequel l'agencement de sortie d'air (112, 220, 300, 400, 500, 600, 700) comprend une sortie d'air principale (221, 312, 412) et une sortie d'air de dérivation (225, 226, 334, 344, 538).

**7.** Sèche-cheveux selon la revendication 6, dans lequel la sortie d'air de dérivation (225, 226, 334, 344, 538) est adaptée pour servir de soupape de sureté.

**8.** Sèche-cheveux selon la revendication 2, dans lequel le volet mécanique (223, 224, 331, 341, 431, 531) est adapté pour actionner une sortie d'air de dérivation (225, 226, 334, 344, 538).

**9.** Sèche-cheveux selon la revendication 6, dans lequel la sortie d'air de dérivation (225, 226, 538) est configurée pour guider de l'air chauffé sensiblement dans la direction de la sortie d'air principale (221).

**10.** Sèche-cheveux selon la revendication 6, dans lequel l'élément chauffant (130) et/ou le ventilateur (120) est configuré de sorte qu'une température d'air de l'écoulement d'air soit limitée à une valeur maximum, lorsque l'écoulement d'air sort à travers la sortie d'air de dérivation (225, 226, 334, 344, 538) seulement.

**11.** Sèche-cheveux selon la revendication 1, dans lequel une direction de sortie d'air de l'agencement de sortie d'air (112, 220, 300, 400, 500, 600, 700) dépend de la pression (P1, P2) à l'intérieur du boîtier (110).

**12.** Sèche-cheveux selon la revendication 1, dans lequel le dispositif de changement d'écoulement (631, 632) comprend en outre un dispositif de fixation (638) pour fixer le dispositif de changement d'écoulement (631, 632) dans une position souhaitée.

**13.** Buse pour sèche-cheveux, dans lequel la buse (113,

310, 410) comprend un agencement de sortie d'air (112, 220, 300, 400, 500, 600, 700) selon une quelconque des revendications 1 à 12.

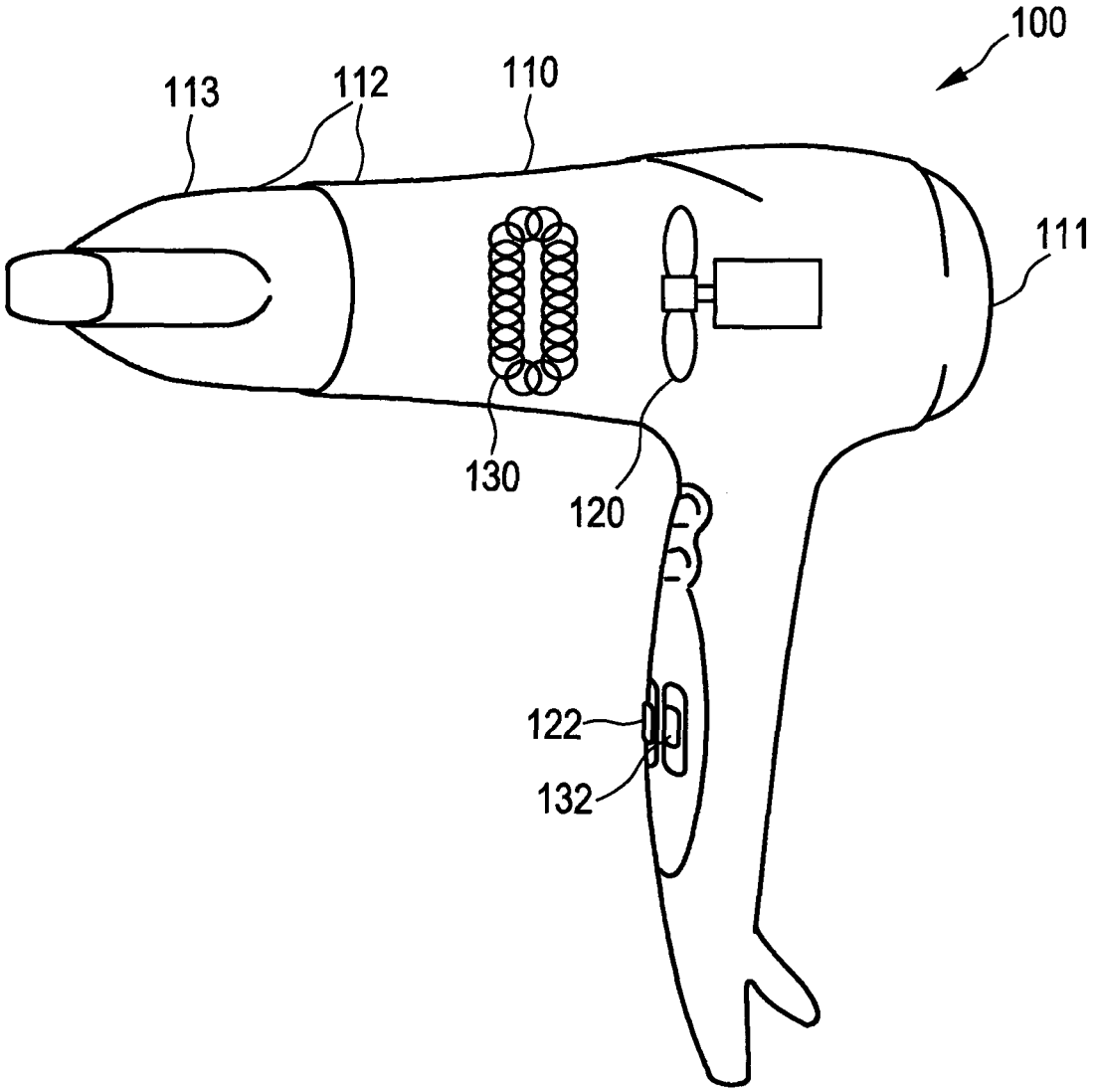


FIG. 1

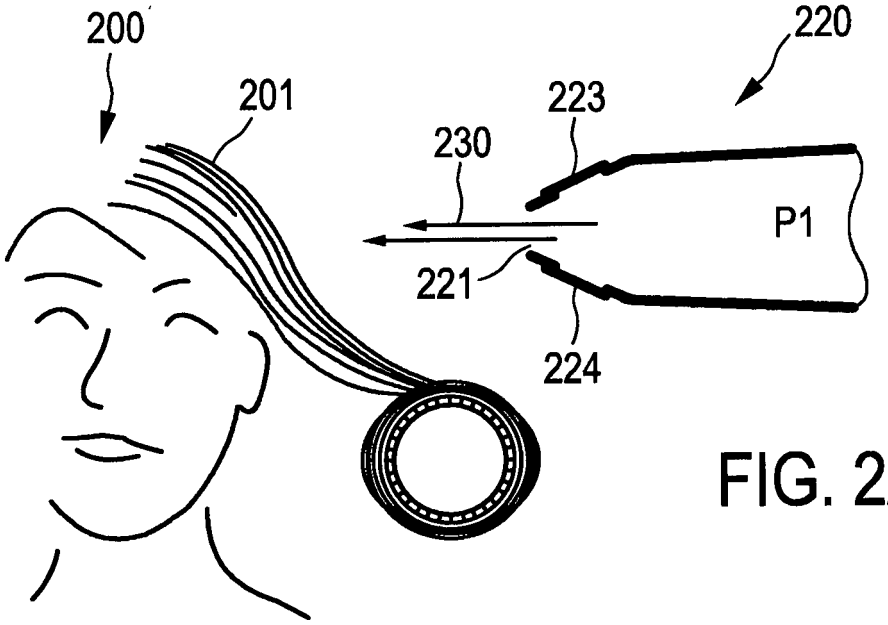
200
201
220
223
230
P1
221
224

FIG. 2A

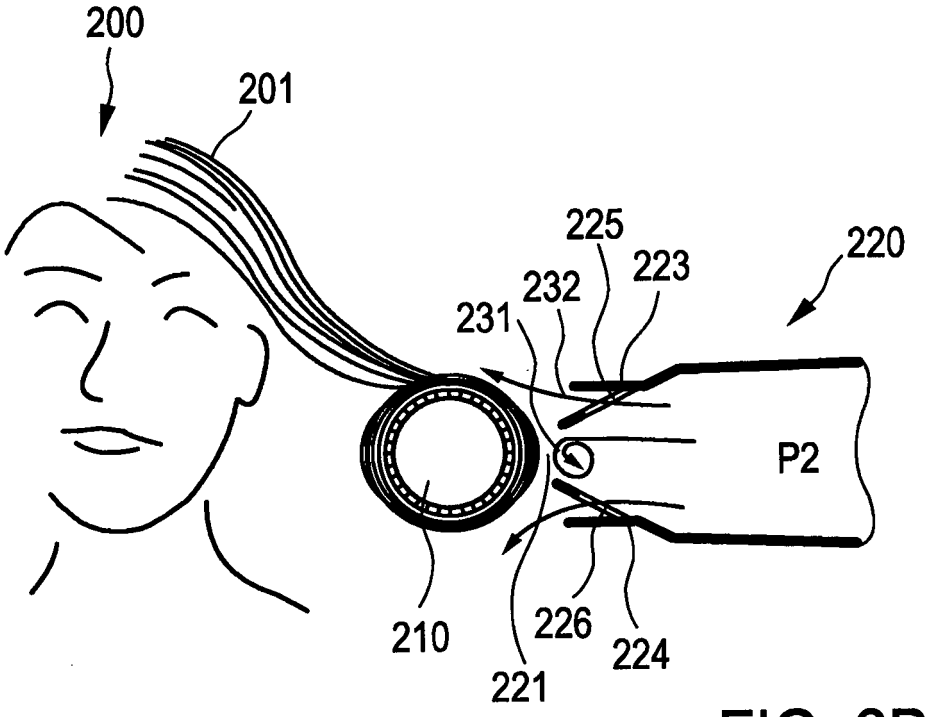
200
201
225
220
223
232
231
P2
210
226
224
221

FIG. 2B

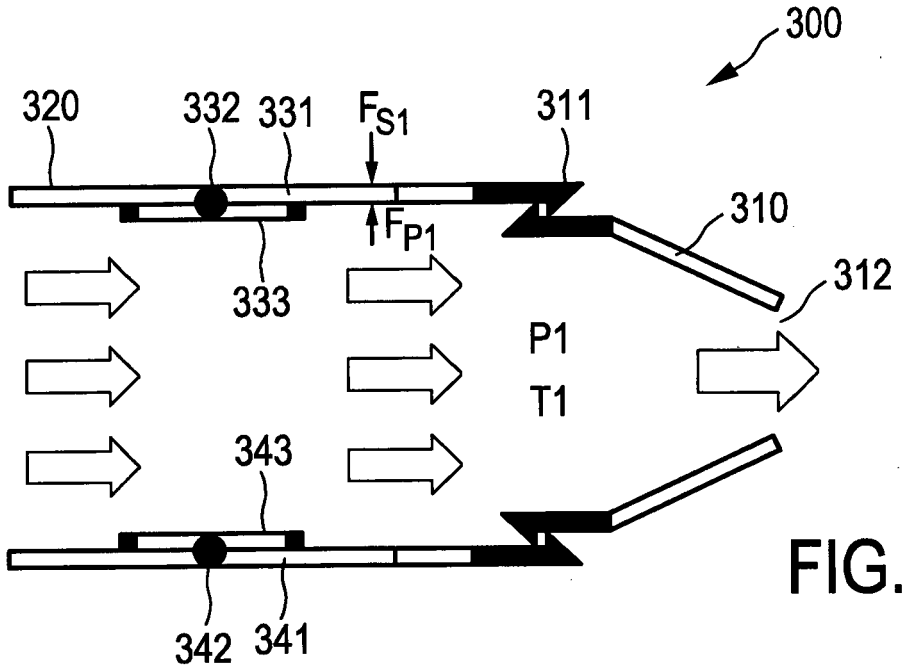
300
320
332
331
$F_{S1}$
311
310
312
$F_{P1}$
333
P1
T1
343
342
341

FIG. 3A

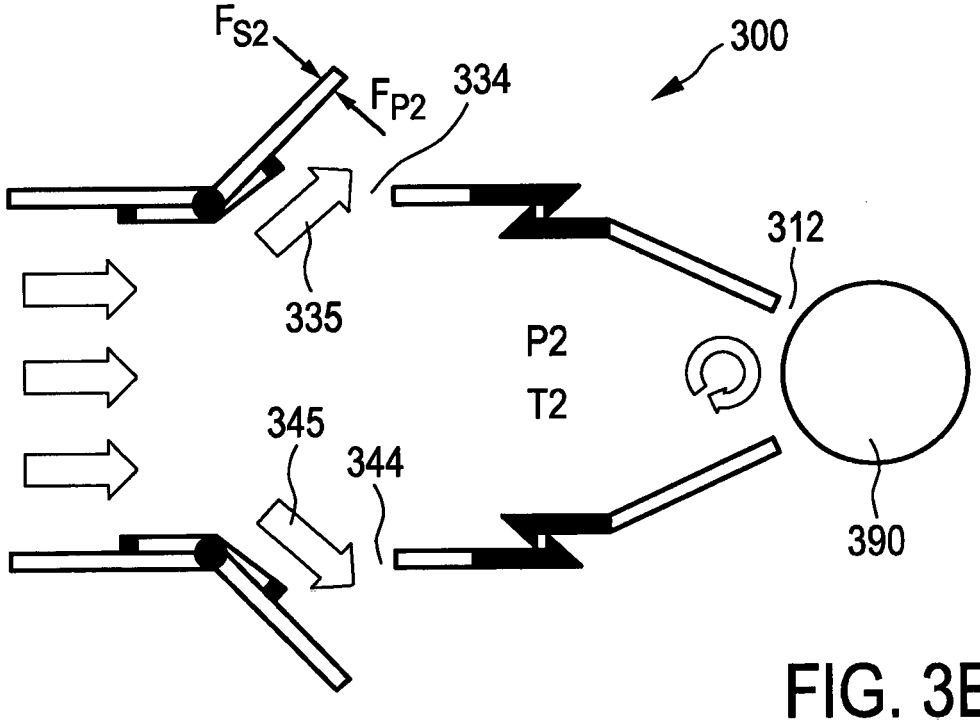
$F_{S2}$
$F_{P2}$
334
300
312
335
P2
T2
345
344
390

FIG. 3B

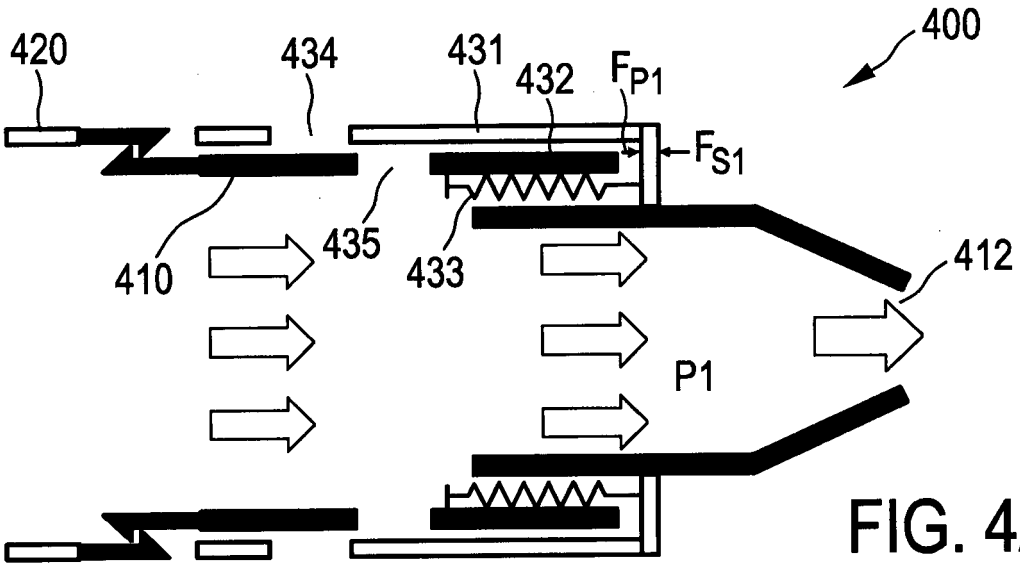
420
434
431
432
$F_{P1}$
400
$F_{S1}$
410
435
433
412
P1

FIG. 4A

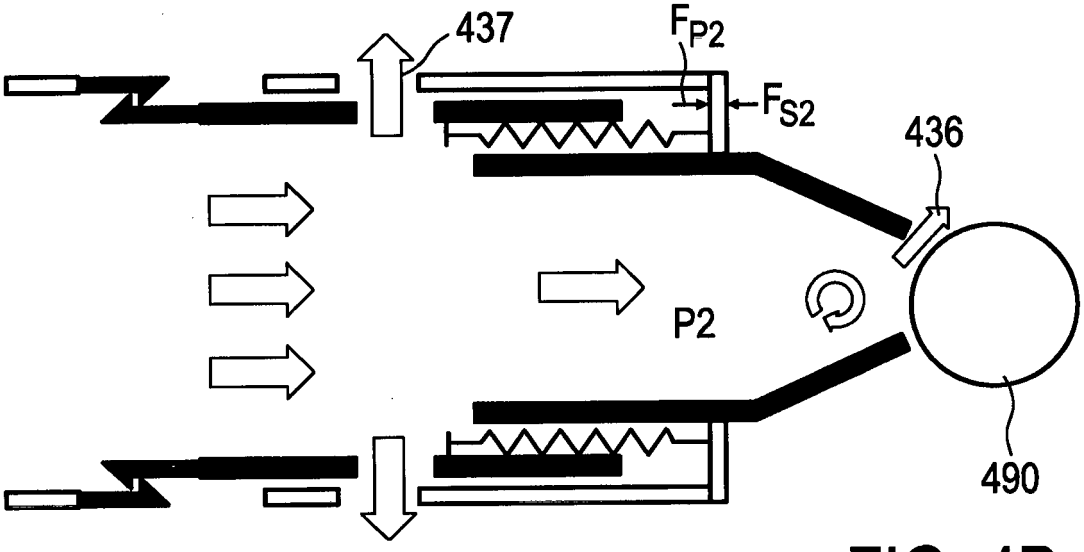
437
$F_{P2}$
$F_{S2}$
436
P2
490

FIG. 4B

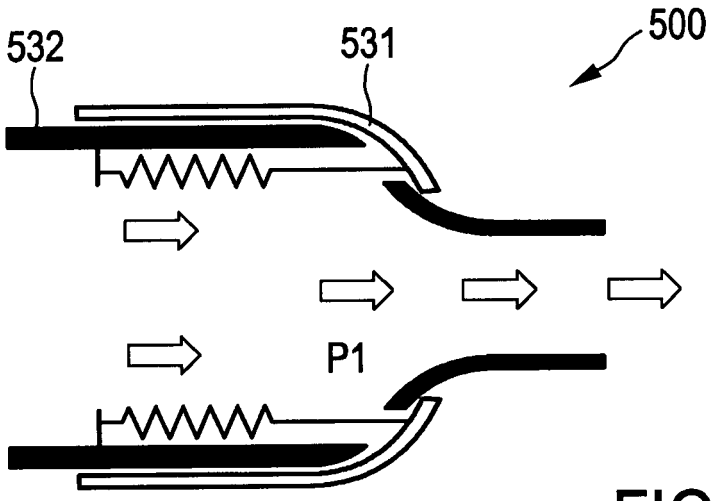


FIG. 5A

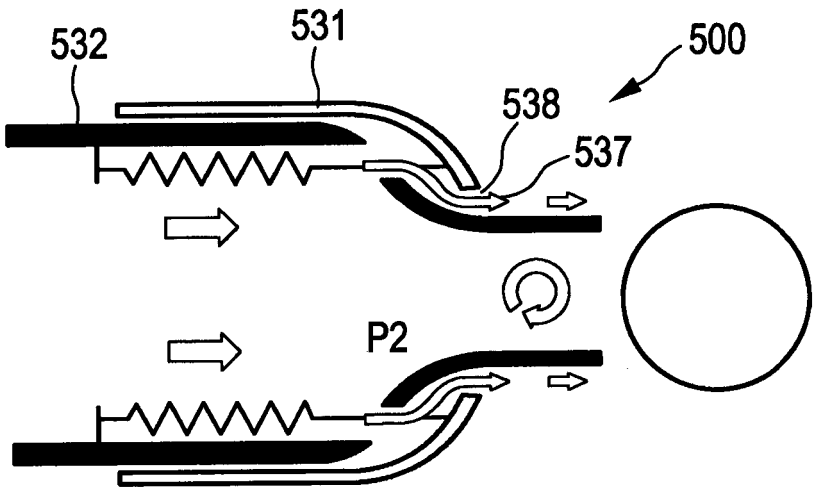


FIG. 5B

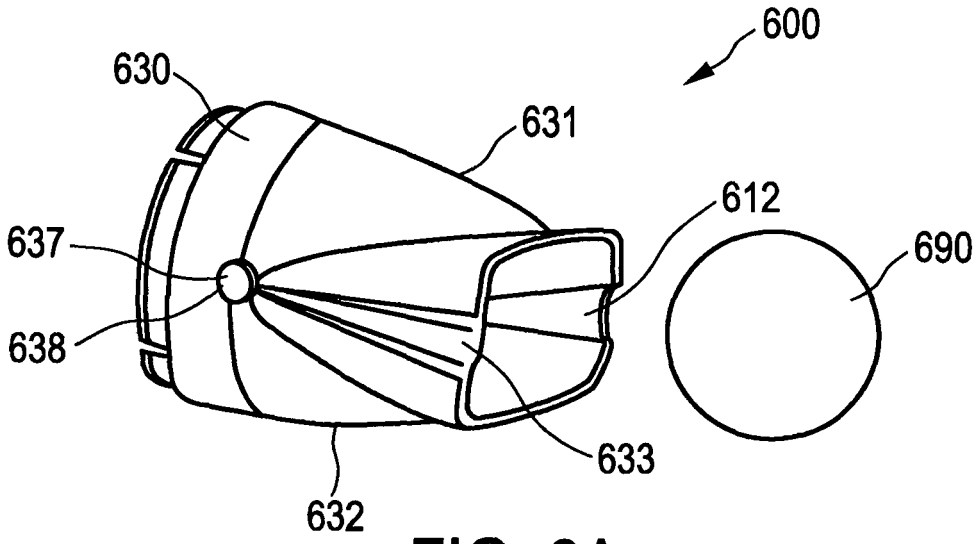


FIG. 6A

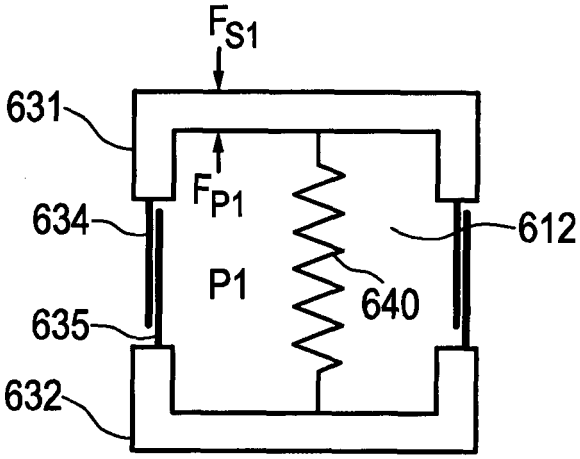


FIG. 6B

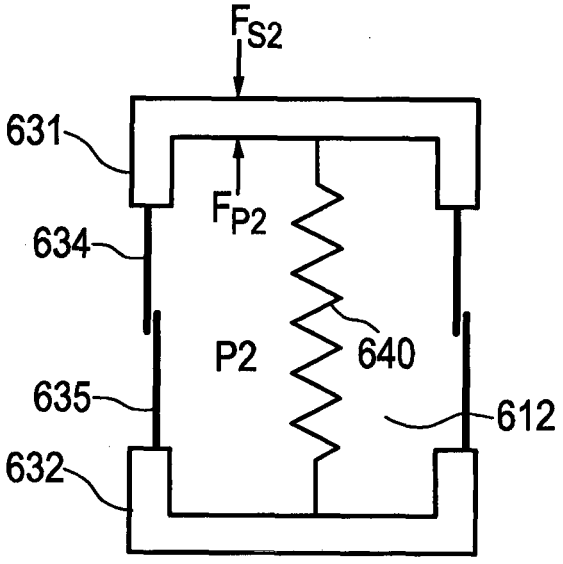


FIG. 6C

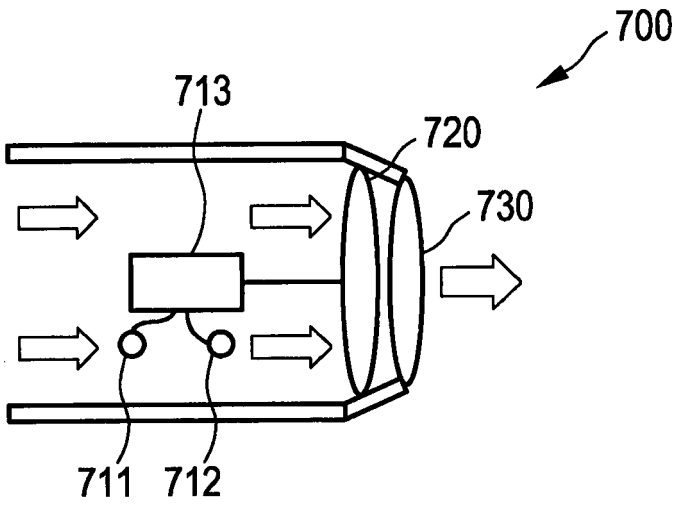


FIG. 7A

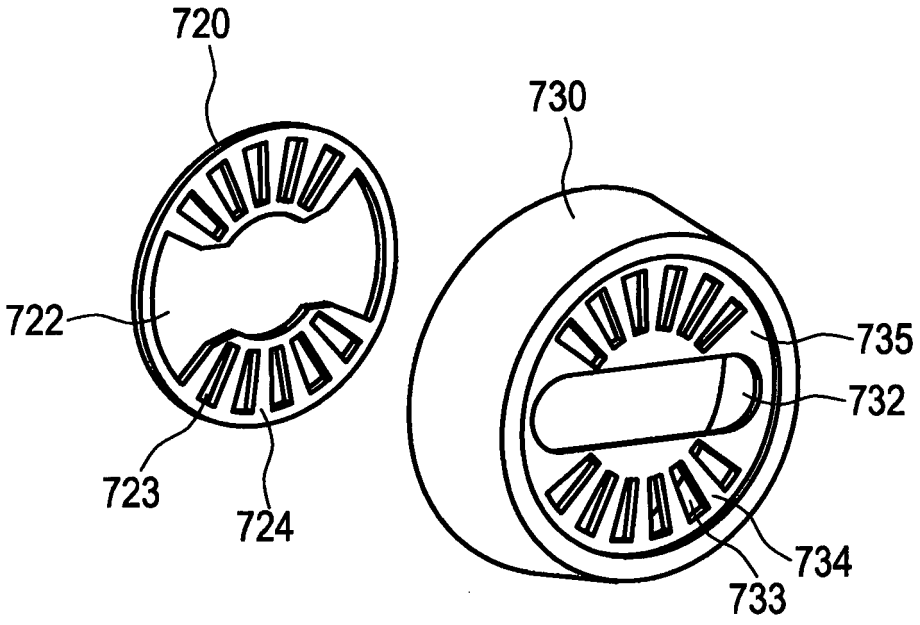


FIG. 7B

## REFERENCES CITED IN THE DESCRIPTION

*This list of references cited by the applicant is for the reader's convenience only. It does not form part of the European patent document. Even though great care has been taken in compiling the references, errors or omissions cannot be excluded and the EPO disclaims all liability in this regard.*

### Patent documents cited in the description


- US 5790749 A **[0005] [0010]**