Feb. 16, 1943. R. G. BERRY 2,311,179

SAFETY SWITCH FOR INTERNAL COMBUSTION ENGINES

Filed May 27, 1941

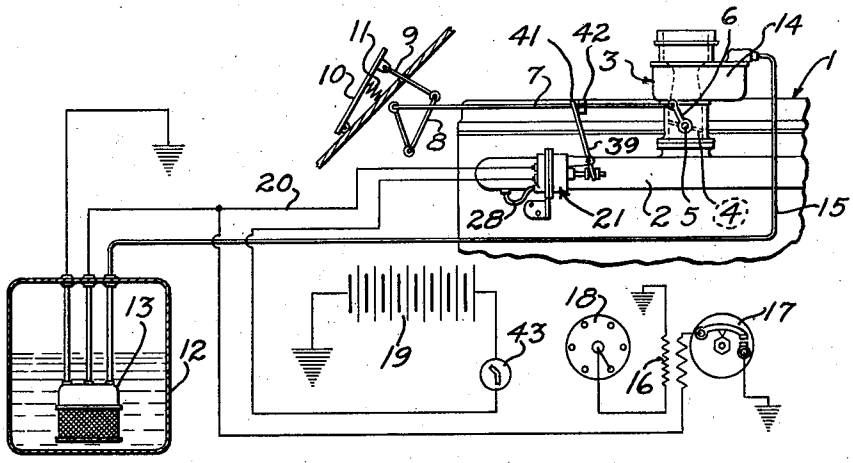

FIG. 1.

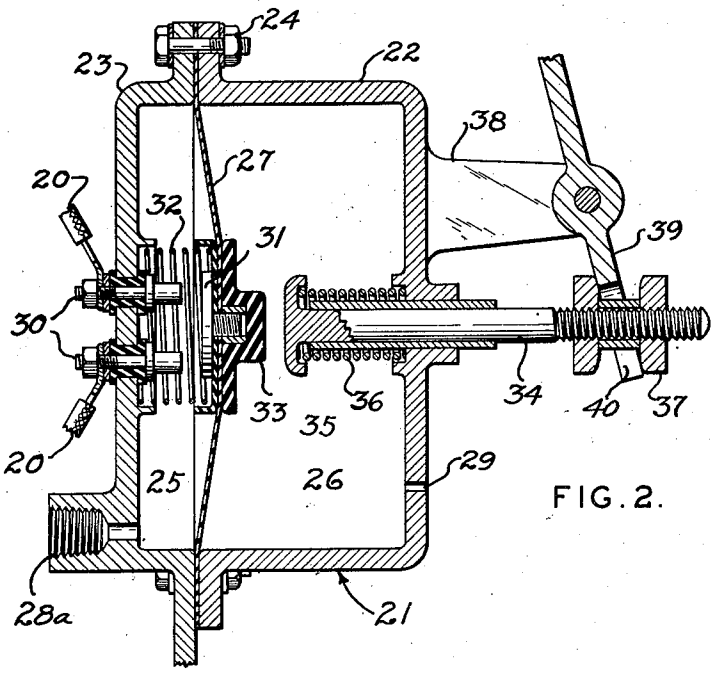

FIG. 2.

INVENTOR
RUSSEL G. BERRY
Donald U. Rich
ATTORNEY

Patented Feb. 16, 1943 2,311,179

UNITED STATES PATENT OFFICE

2,311,179

SAFETY SWITCH FOR INTERNAL COMBUSTION ENGINES

Russell G. Berry, Maplewood, Mo., assignor to Carter Carburetor Corporation, St. Louis, Mo., a corporation of Delaware

Application May 27, 1941, Serial No. 395,406

5 Claims. (Cl. 123—198)

This invention relates to safety control switches for use with internal combustion engines, and more particularly concerns suction operated switches for the control of electric fuel supply pumps, engine ignition devices and the like.

It is well known that the intake manifold suction in an automotive engine varies widely in the course of ordinary operation, and that, in present day engines operating under full load with the throttle substantially open, it may drop to a point at which it is practically useless as an actuating force. In view of this, it will be seen that; if it is desired to employ this force, as for example to actuate a safety control switch, a supplementary force or additional means must be employed to insure operation of the device when the suction drops to this extent. While it is true that there will always be some suction under any conditions of engine operation, practical considerations in the design of a reliable pressure responsive safety switch do not permit constructions sensitive to such slight pressure differentials.

It is also desirable to point out that while, in a throttle controlled engine, the intake suction may theoretically drop to the same minimum with a wide open throttle as with a substantially closed throttle, it cannot, however, do so at the same engine speed. It would, obviously, require a much lower engine speed to drop the intake suction to such minimum with a substantially closed throttle. Practically, present day engines would not continue to operate under their own power at such low speed. It therefore follows; that, in the practical operation of an automotive vehicle engine, an ample source of suction is always available for dependable operation of accessories when the intake is substantially throttled, but with a substantially open throttle the suction may and quite often does drop to a point at which it is useless for this purpose.

It is, therefore, an object of the present invention to provide a generally improved switch device arranged to be actuated by engine suction in which additional means are provided to insure operation of the switch under engine operating conditions wherein the suction may be insufficient.

It is a further object of the present invention to provide, in combination, with an internal combustion engine having a throttle controlled intake, a switch device actuated solely by intake suction under substantial throttled operation and by throttle interconnected means or by throttle interconnected means and suction under conditions of decreased throttling.

Further objects and advantages will appear upon reference to the following description and accompanying drawing, referring to which—

Fig. 1 is a diagrammatic view showing a portion af an internal combustion engine having an intake manifold, a carburetor, an engine fuel supply system, engine ignition devices, and a control switch constructed in accordance with the present invention.

Fig. 2 is an enlarged sectional view of the control switch shown in Fig. 1.

Numeral 1 indicates a fragmentary portion of an internal combustion engine having an intake manifold 2. A carburetor, generally indicated at 3, is shown mounted on manifold 2. The carburetor is provided with a throttle valve 4 mounted on a rotatable shaft 5. Mechanism for the manual control of the throttle valve from a remote point, comprises a lever 6 rigidly attached to throttle shaft 5, a link 7, a bell crank 8, a link 9 and a foot pedal 10. The throttle valve is held in a closed position by a comparatively strong spring 11.

A fuel supply tank is indicated at 12 having mounted therein an electrically driven pump 13 for supplying fuel under pressure to the carburetor. The fuel is conducted from the pump 13 to the carburetor float chamber 14 through a fuel conduit 15. A conventional float actuated inlet valve (not shown) for controlling the inlet of float chamber 14 is provided and functions in a well known manner to maintain a substantially constant level of fuel in the chamber.

Engine ignition devices comprising an induction coil, interrupter, and distributor are diagrammatically indicated at 16, 17 and 18, respectively. A storage battery is indicated at 19. The ignition devices and pump 13 are connected to battery 19 through a branched lead 20. Interposed in lead 20 is an automatic switch device generally indicated at 21.

Switch 21 is shown in greater detail in Fig. 2 and comprises a dividable casing formed of sections 22 and 23 which are attached by bolts 24. The interior of the casing is divided into separate chambers 25 and 26 by a flexible partition or diaphragm member 27 which is firmly clamped at its outer edges between the casing sections. Chamber 25 is connected to the engine intake manifold by means of a tube 28 which is attached at one end by suitable fittings (not shown) to the threaded boss 28a. Chamber 26 communicates with the atmosphere by means of vent 29. A pair of spaced contacts 30 supported by section 23 and insulated therefrom extending from the exterior of the casing to the interior of chamber 25 are

provided. These contacts are connected at their outer ends to lead 20. Attached to the center of diaphragm 27 and on the side of chamber 25 is a switch plate member 31 adapted to close the circuit at that point when moved toward the left. A coil spring 32 bearing against casing section 23 and diaphragm 27 normally urges the switch plate to the right toward a switch open position.

Attached to the center of diaphragm 27 and on the side of chamber 26 is a bumper block 33 formed of insulating material. Slidably received in a perforation through the center of casing 22 is a plunger member 34 extending interiorly of chamber 26 and exteriorly of the casing and being adapted, when moved toward the left, to contact bumper block 33 and to move switch blade 31 to the left to close the circuit. The end of plunger 34 interior of chamber 26 is provided with a head portion 35. A coiled spring 36 bearing against casing section 22 and the underside of plunger head 35 urges plunger 34 toward the left. The exterior end of plunger 34 is provided with a spool member 37 threaded thereon. Pivotally mounted on a boss 38 on casing 22 is a lever 39 having a downwardly extending arm provided with a forked end 40 which spans the barrel portion of spool 37 and abuts the flanges thereof and an upwardly extending arm having a forked end at 41 (not shown) which spans the throttle operating link 7 and abuts a stop dog 42 carried on link 7.

A second manual key operated switch 43 is interposed in lead 20.

It will be understood that the coiled spring 36 is considerably weaker than the throttle closing spring 11.

In operation when it is desired to start the engine the control circuit is closed at switch 43 and the foot pedal 10 depressed to move the throttle to some partially open position. It is desirable in starting to move the throttle open partially. As the throttle is moved open, link 7 and stop dog 42 will move toward the right permitting spring 36 to move plunger 34 toward the left and to move switch plate 31 into contact with contacts 30. It will be understood that spring 32 is, in turn, substantially weaker than spring 36. The circuit for energizing the engine ignition devices and the fuel pump now being closed the engine may be started.

While the engine is in operation and the throttle valve is in a near closed or closed position there will always be sufficient suction in the intake manifold to hold switch plate 31 in contact. If, however, the throttle is moved openward substantially or fully and the engine is operated under sufficient load to cause the manifold suction to drop beyond that required to hold switch blade 31 in contact, spring 36, under these conditions, will be permitted to urge plunger 35 toward the left to maintain a closed circuit.

If the engine should, by chance, stall or the vehicle become involved in an accident and the operator neglect or be unable to break the circuit at switch 43 before departing from the vehicle the circuit will automatically be broken at switch 21, due to loss of suction and the action of throttle pull back spring 11, thus breaking the fuel pump and ignition circuit and eliminating fire hazard.

The foregoing description and accompanying drawing are intended to be illustrative and not limiting and the exclusive use of all modifications within the scope of the appended claims is contemplated.

I claim:

1. In combination, an internal combustion engine having an intake manifold, a carburetor having a throttle valve, mechanism for controlling said valve, a circuit for electrically operated engine accessories, a switch in said circuit, spring means urging said switch toward an open position, stronger opposing spring means urging said switch toward a closed position, means operatively connected to said throttle control mechanism for contracting said stronger spring to prevent the closing of said switch thereby as the throttle is moved toward a closed position, and means responsive to intake manifold suction for moving said switch to a closed position.

2. In combination, an internal combustion engine having an intake manifold, a valve for controlling the intake, mechanism for controlling said valve including a comparatively strong spring acting to hold said valve in a closed position, a circuit for electrically operated engine accessories, a switch in said circuit, a pair of opposing springs, one operating to move said switch toward a circuit breaking position and the other operating to move said switch toward a circuit closing position, said circuit closing spring being substantially stronger than said circuit breaking spring but weaker than said valve closing spring, a one-way connection between said circuit closing spring and said valve controlling mechanism whereby said circuit closing spring is overcome to permit the action of said circuit breaking spring as said valve is moved toward a closed position, and means responsive to intake manifold suction and opposing said circuit breaking spring to move said switch to a circuit closed position.

3. In combination, an internal combustion engine having an intake manifold, a carburetor having a throttle valve, mechanism for controlling said throttle valve, a circuit for operating engine accessories, and a switch for said circuit including a vacuum chamber formed with a wall movable by predetermined suction, a contact carried by said movable wall, an additional contact arranged to engage the contact of said movable wall to close said circuit at predetermined suction, means normally urging said wall outwardly to separate said contacts, manual means for urging said movable wall inward to close said contacts, automatic means normally urging said manual means to contact closing position, and means controlled by said throttle for rendering ineffective said automatic means.

4. In combination, an internal combustion engine having an intake manifold, a carburetor having a throttle valve, mechanism for controlling said throttle valve, a circuit for operating engine accessories, and a switch for said circuit including a vacuum chamber formed with a wall movable by predetermined suction, a contact carried by said movable wall, an additional contact arranged to engage the contact of said movable wall to close said circuit at predetermined suction, means normally urging said wall outwardly to separate said contacts, manual means for urging said movable wall inward to close said contacts, automatic means normally urging said manual means to contact closing position, and means for rendering said automatic means ineffective, said last named means being actuated by a predetermined throttle movement.

5. In combination, an internal combustion engine having an intake manifold, a carburetor having a throttle valve, mechanism for controlling the throttle valve, a circuit for operating en-

gine accessories, and a switch for said circuit including a vacuum chamber formed with a wall movable by predetermined suction from said manifold, a fixed contact carried by said chamber, a contact carried by said movable wall for circuit closing engagement with said fixed contact, means normally urging the movable wall outward from said fixed contact to maintain an open circuit, manual means for urging said movable wall inward to close said contacts, resilient means normally urging said manual means to cause the closing of said contacts, and adjustable means rendering said resilient means ineffective, said last named means being actuated by throttle movement.

RUSSELL G. BERRY.