(12) INTERNATIONAL APPLICATION PUBLISHED UNDER THE PATENT COOPERATION TREATY (PCT)

(19) World Intellectual Property Organization
International Bureau

(43) International Publication Date
10 April 2003 (10.04.2003)

PCT

(10) International Publication Number
WO 03/029763 A1

(51) International Patent Classification[7]: G01F 23/04

(21) International Application Number: PCT/US02/31326

(22) International Filing Date: 1 October 2002 (01.10.2002)

(25) Filing Language: English

(26) Publication Language: English

(30) Priority Data:
60/326,636 1 October 2001 (01.10.2001) US

(71) Applicant: **ORSCHELN PRODUCTS LLC** [US/US]; 2000 US HWY 63 South, Moberly, MO 65270 (US).

(72) Inventors: **DOUGHERTY, John, Michael**; RR#2 Box 47, Clark, MO 65243 (US). **SLABAUGH, Karen, S.**; 303 Brickingham Way, Columbia, SC 29229 (US). **MAREK, Steven**; 900 E. Urbandale, Moberly, MO 65270 (US).

(74) Agent: **BOYER, Michael, Kevin**; Orscheln Management Co, 2000 US HWY 63 South, Moberly, MO 65270 (US).

(81) Designated States *(national)*: AE, AG, AL, AM, AT, AU, AZ, BA, BB, BG, BR, BY, BZ, CA, CH, CN, CO, CR, CU, CZ, DE, DK, DM, DZ, EC, EE, ES, FI, GB, GD, GE, GH, GM, HR, HU, ID, IL, IN, IS, JP, KE, KG, KP, KR, KZ, LC, LK, LR, LS, LT, LU, LV, MA, MD, MG, MK, MN, MW, MX, MZ, NO, NZ, PL, PT, RO, RU, SD, SE, SG, SI, SK, SL, TJ, TM, TR, TT, TZ, UA, UG, UZ, VN, YU, ZA, ZW.

(84) Designated States *(regional)*: ARIPO patent (GH, GM, KE, LS, MW, MZ, SD, SL, SZ, TZ, UG, ZM, ZW), Eurasian patent (AM, AZ, BY, KG, KZ, MD, RU, TJ, TM), European patent (AT, BE, BG, CH, CY, CZ, DE, DK, EE, ES, FI, FR, GB, GR, IE, IT, LU, MC, NL, PT, SE, SK,

[Continued on next page]

(54) Title: FLEXIBLE DIPSTICK FOR MEASURING LIQUID LEVEL

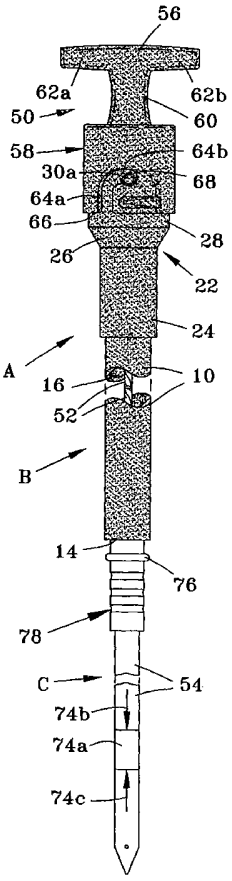

(57) Abstract: A fluid level measuring device, also referred to as a dipstick, for measuring the fluid level in a fluid reservoir or tank, such as an oil pan or transmission reservoir in an internal combustion engine. The fluid level measuring device includes a stationary tube assembly in which a rotatable dipstick assembly is disposed. The dipstick assembly includes a fluid level indicator measuring blade attached to an elongated shaft that is molded into a plastic handle assembly. The plastic handle assembly includes a bayonet type locking mechanism for locking the handle to the stationary tube assembly. A compressible seal forms a pressurized seal between the stationary tube assembly and the handle.

WO 03/029763 A1

TR), OAPI patent (BF, BJ, CF, CG, CI, CM, GA, GN, GQ, GW, ML, MR, NE, SN, TD, TG).

Published:

— *with international search report*

— *before the expiration of the time limit for amending the claims and to be republished in the event of receipt of amendments*

For two-letter codes and other abbreviations, refer to the "Guidance Notes on Codes and Abbreviations" appearing at the beginning of each regular issue of the PCT Gazette.

FLEXIBLE DIPSTICK FOR MEASURING LIQUID LEVEL

The subject matter herein claims benefit of U.S. Patent Application Serial No. 60/326,636, filed on October 01, 2002, and entitled "Fluid Level Measuring Device"; the disclosure of which is hereby incorporated by reference.

Field of the Invention

The subject invention is directed to a device used to measure fluid levels, and more particularly, to dipsticks used to measure fluid levels by contacting an indicator at one end of the dipstick into a fluid holding compartment.

Background of the Invention

With internal combustion engines, transmissions, and other machinery requiring fluids for lubrication and cooling, it is known to use a fluid measuring device for indicating the fluid level in a selected fluid holding compartment. Typically, the fluid measuring device is a dipstick for checking the level of fluid such as engine or transmission oil, or hydraulic fluid within one of the many fluid holding compartments in the engine, transmission, or other machine. The dipstick is normally an elongated indicator that is slidably located within a conduit or pipe attached to the engine, transmission, gear box, reservoir or machine in which a fluid level indication is desired. When the dipstick is fully inserted into the conduit, one end is immersed into the fluid. When an actual reading of the fluid level is desired, the other end of the dipstick is pulled from the conduit thereby removing the entire dipstick from the conduit to allow the user

to read the fluid level from the one end. The dipstick is then reinserted into the fluid compartment once the fluid level has been checked.

Traditional fluid level indicator systems typically consist of a two piece system with a holding tube and a dipstick. Examples of conventional dipstick systems are disclosed in U.S. Patent Nos. 3,371,418; 5,485,681 and 5,829,153; the disclosure of each of which is hereby incorporated by reference. The holding tubes are generally fabricated from metal tubing and require various forming operations including bending, flaring, and machining, followed by the attachment of a dipstick receptacle. In addition, the dipstick is fabricated from multiple components including a handle, washer, cap, rubber stopper, shaft assembly, and a marked spring steel shaft mechanically joined to a spring steel blade. The actual assembly of these various components involves multiple assembly operations requiring costly, time-consuming, and labor intensive manufacturing steps. Therefore, a simpler design requiring fewer parts and connections as well as less forming is desirable.

In addition, today's engines, transmissions, and machinery designs are smaller, more compact, and of less weight than traditional engines, transmissions, and machinery. Therefore, fluid level indicator systems must be smaller, more compact, and lighter weight. Moreover, the fluid access routes or paths through which the fluid level indicator system accesses the fluid storage compartments are becoming more complex (more twists and turns as well as longer runs), smaller, and more compact.

There is a need in this art for smaller and lighter weight fluid level indicator systems with improved flexibility. There is also a need for a fluid level indicator system allowing access to the fluid compartment while assuring a secure, sealed closure of the

access when fluid level determinations are not being made and/or additional fluid is not being added. This sealed closure would prevent unnecessary loss of the fluids during operation as well as supply level pressurization. Moreover, a positive indication that the dipstick is securely in place is desirable.

Summary of the Invention

The instant invention solves problems associated with conventional fluid level measuring systems by providing a handle associated with a dipstick that is free to swivel or rotate freely within a plastic handle. By being able to rotate (e.g., while being inserted through a non-linear tube and into an engine component), the dipstick can accommodate travel along non-linear routes without binding or being permanently deformed.

The fluid level measuring device includes a stationary tube assembly extending from the fluid compartment in which a dipstick is disposed. The dipstick includes a plastic handle that is joined or molded to one end of a shaft, such as a flexible spring steel wire shaft. If desired, a mold release agent can be applied upon a portion of the shaft in order to prevent the over-molded handle from permanently bonding to the shaft. A precision stamped fluid level indicator blade extends from a second end of the shaft and is preferably attached to the shaft by either die casting, spin welding, ultrasonic welding, or other bonding means, or by means of a fitting or other connector. The tube assembly is preferably made of a plastic material with an enlarged end. Lugs extend from the end and provide a bayonet interconnection between the tube and the handle assembly by twisting the handle assembly relative to the tube. The lugs can extend inwardly or outwardly depending upon the design of the handle, e.g., the handle can be inserted into

an enlarged opening of the stationary tube or about the end of the stationary tube. This causes inter-engagement of the lugs with slots in the handle. An engine fitting (e.g, a steel engine fitting) extends from the tube and serves to guide the indicator blade to an appropriate location within the fluid cavity. Alternatively, the tube can include at least one O-ring or other seal that engages a protuberance/ridge defined around the tube in order to provide an interference or compression fit into a reservoir.

The instant invention also solves problems associated with conventional manufacturing methods by staking an engine fitting at the end of the stationary tube associated with the fluid level measuring device. The tube can be shaped or bent into a wide range of linear or non-linear configurations. Typically the tube comprises commercial grade steel.

A gasket acts as a pressure lock seal for sealing the handle to the enlarged end when the lugs are locked in the slots. This pressure lock seal serves to allow significant pressurization within the dipstick and oil pan or other chamber the dipstick is affixed to. The gasket can also urge the bayonet connection of the handle into a locked position relatively to the lugs on the stationary tube.

The bayonet interconnection in unison with the gasket supplies an actual pressurized seal thereby allowing pressurized testing of the combustion engine, transmission, or other machinery without either removal of the dipstick or attempts at sealing the dipstick. Furthermore, a sealed dipstick allows the combustion engine, transmission, or other machinery to run at the intended pressure rather than either below the intended pressure or at the intended pressure due to an adjustment.

The structure is manufactured from lightweight, corrosion-resistant, plastic materials such as nylon, glass-reinforced nylon, among other oil, water and temperature resistant thermoplastic materials, with the exception of the metallic shaft, attachment fitting, blade, and metal engine fitting. The metallic shaft can be fabricated from stainless steel, zinc plated, phosphated, chromated, among other metal treatments to improved corrosion resistance. The seal and locking engagement between the handle and enlarged end preferably involves a quarter-turn sealing motion with an improved sealing capability and a positive lock feature.

In one aspect of the invention, the fluid level indicating system is capable of being in fluid communication with the combustion engine, transmission, or other machinery to which it is affixed while maintaining a constant pressurization therein through an improved method of sealing. Specifically, a seal that is capable of maintaining several atmospheres (at least 1 to 1.5 atm.) of back pressure is desirable. The inventive seal can also serve to reduce emissions from the associated engine, e.g., reducing emissions from the dipstick tube of a diesel engine in order to satisfy environmental regulations.

In another aspect, the invention provides a positive engaging, yet easy to use, locking arrangement for securely locking and sealing the dipstick within or over the tube with an easy motion. It is also desirable that this sealing of the dipstick within the tube is such that the tube may be pressurized to the same back pressure as the combustion engine, transmission, or other machinery.

In a further aspect, the invention provides a smaller and more compact fluid level indicating system which has improved flexibility for routing of the fluid level indicator

system in and around the complex design of today's engines, transmissions, and machinery.

The instant invention can also be employed as a kit or an assemblage in order to retrofit existing dipstick systems. When employed as a retro-fit, the inventive dipstick system provides the same advantages as if installed as an original equipment dipstick.

Regardless of which aspect of the invention is employed, the instant invention provides a more corrosion-resistant, lighter weight, less complex, higher precision and more cost effective fluid level indicator system.

Still other advantages and benefits of the invention will become apparent to those skilled in the art upon a reading an understanding of the following detailed description.

Brief Description of the Drawings

The invention may take physical form in certain parts and arrangements of parts, certain aspects and method of which will be described in detail in this specification and illustrated in the accompanying drawings that form a part hereof. Any dimensions shown on the Figures are for illustration purposes only, and the components shown in these Figures can be employed in a wide range of dimensions and configurations.

FIGURE 1 is a side view of the fluid level measuring device including the stationary tube assembly with a dipstick inserted therein having a handle attached to one end thereof;

FIGURE 2 is a top view of the fluid level measuring device;

FIGURE 3 is a partial sectional view of the fluid measuring device of FIGURE 1;

FIGURE 4 and 5 are front and side elevational views, respectively, of another preferred sealing gasket;

FIGURES 6 and 7 are elevational views of further preferred embodiments of grommet seals;

FIGURE 8 is an elevational view, in partial cross-section, of the end of the dipstick assembly using the seal of FIGURE 7 received on the tube assembly; and

FIGURE 9 is an elevational view of the end of the dipstick assembly incorporating yet another preferred grommet embodiment for sealing the end of the tube assembly.

FIGURE 10 is an exploded side view of the fluid level measuring device including the stationary tube assembly with a dipstick wherein the dipstick handle is inserted within an expanded end of the stationary tube.

FIGURE 11 is a side view of a shaft that is rotatably mounted within a handle.

FIGURE 12 is an exploded side view of a fluid level measuring device that can be retrofit to replace an existing fluid level measuring assembly.

FIGURE 13 is a side view of the fluid level measuring device including the stationary tube assembly with a dipstick inserted therein having a handle attached to one end thereof and a staked engine fitting at the other end.

FIGURE 14 is a side view of the stationary tube assembly of Figure 13 and an associated staked engine fitting.

FIGURE 15 is a side view and cross-sectional drawing of the stationary tube illustrated in Figures 13 and 14.

FIGURE 16 is a side view and cross-sectional drawing of the engine fitting illustrated in Figures 13 and 14.

Cross-Reference to Related Patents and Patent Applications

The subject matter of the invention is related to U.S. Patent No. 6,314,808, filed on November 24, 1997, and Patent No. 6,453,740, filed on September 05, 2001; both entitled "Fluid Level Measuring Device". The disclosure of these patents is hereby incorporated by reference.

Detailed Description

One aspect of the instant invention relates to a fluid level indicator system comprising a handle, a rotatably mounted shaft and dipstick mounted within the handle, and a stationary tube having an opening for receiving the handle. The rotatably mounted shaft can be over-molded by the plastic handle in a manner that permits the shaft to rotate (or prevents the plastic from permanently bonding to the shaft). The handle can be received within or around the stationary tube opening.

At least a portion of the shaft is contacted with a fluid that prohibits the over-molding plastic handle from permanently bonding to the shaft. While any suitable material can be employed, examples of suitable materials comprise commercially available injection mold release agents, oils, lubricants, among others capable of preventing a permanent bond between the shaft and over-molded plastic. One material comprises a polymeric carrier such as an acrylic, urethane or epoxy and heat expandable spheres, e.g., butane filled thermoplastic shells such as Expancels® supplied by Akzo-Nobel. The shaft is, for example, dipped into the expandable material, and during the handle plastic over molding process the heated plastic causes the material to expand

thereby preventing the thermoplastic from bonding to the shaft. Any bond forming between the expandable material and the shaft can be broken by rotating the shaft. If desired, the fluid can be supplemented or replaced by using a sleeve or material that is consumed during the over-molding process. Alternatively, a roller tube or sleeve can be placed around the shaft such that the over-molding plastic bonds to the pin while allowing shaft to rotate within the tube.

Another aspect of the invention relates to an improved manufacturing method and resultant product wherein the stationary tube is staked onto an engine fitting (the engine fitting guides the shaft and indicator blade into a fluid reservoir such as oil, transmission fluid, among others). This method can be employed for manufacturing fluid level indicators with rotary or stationary shafts. The stationary tube can have a linear or non-linear configuration, and a wide range of lengths. Employing a staking operation to affix an engine fitting onto the stationary tube ensures a fluid tight connection while reducing assembly costs.

Referring now to the drawings wherein the showings are for the purposes of illustrating certain aspects of the invention only and not for purposes of limiting the invention, the overall arrangement of such aspects of the fluid level measuring device **A** can best be understood by reference to FIGURES 1, 3, and 8 - 10. As illustrated therein, the fluid level measuring device **A** comprises a stationary tube assembly **B** with a dipstick assembly **C** removably and rotatably disposed therein. Specifically, tube assembly **B** is an elongated, hollow guide tube **10** with first and second spaced ends **12** and **14** having a through passage **16** that communicates with first and second openings **18** and **20** at the respective first and second ends. The tube can be fabricated from any suitable material.

Examples of suitable material comprises steel, aluminum, painted steel, plastic, among others.

The tube assembly **B** further includes an enlarged diameter coupler or spout **22** attached to the first end **12** of the guide tube **10**. In one aspect, the coupler is joined to the first end **12** of the guide tube as described herein. The coupler **22** has a small diameter portion 24, a flare or tapered transition portion **26**, and a large diameter portion **28** at its second end. The small diameter portion is closely received over the guide tube first end. The large diameter portion includes a pair of outwardly extending lugs **30A** and **30B** that form a portion of a locking assembly to be described in greater detail below. The coupler is also hollow, defining a continuous internal cavity that extends from a first or upper end **32** to a second or lower end **34**. The internal cavity is enlarged at the upper end to accommodate an interconnection between the shaft and a handle, and, if desired, to provide an orifice for receiving a spout on a fluid container, such as an oil container. For example, the spout of a standard quart of oil will fit in this enlarged upper end. Alternatively, the enlarged upper end may be dimensioned to receive a different sized oil container. It will be appreciated, however, that the enlarged upper end will eliminate use of a funnel in many instances.

Dipstick assembly **C** includes a plastic molded handle assembly **50**, an elongated relatively stiff, yet bendable shaft **52** such as the stranded wire rope illustrated in the drawings (e.g., Figures 3, 8 and 11), and a fluid level indicator blade **54**. The shaft **52** is rotatably mounted within plastic molded handle assembly **50**, e.g., the shaft **52** can rotate and flex while being inserted along the typically non-linear length of the stationary tube. The handle **50** includes gripping portion **56** connected to a hollow cylindrical base **58** by

a neck **60** of reduced dimension. The gripping portion preferably has a pair of knobs **62A** and **62B** extending outwardly and obliquely from the neck **60**. The base **58**, on the other hand, has a pair of slots **64A** and **64B** defined therein. In one specific aspect, each slot extends entirely through the base sidewall and is of a generally curvilinear conformation. The slots have an opening at one end along lower edge **66** of the base and a locking seat **68** at the other end of the curvilinear slot. Each of the curvilinear slots **64A** and **64B** is defined so as to have an axial portion aligned approximately with the shaft, and likewise the tube assembly **B**, and positioned adjacent the lower edge **66** of the base **58**, and a generally transverse portion at the other end of the slots and in which locking seat **68** is defined.

The combination of slot **64A** and **64B** with lugs **30A** and **30B** defines a locking mechanism or bayonet type interconnection where lugs **30A** and **30B** slide in slots **64A** and **64B**. Axial insertion of the handle over the lugs and a quarter turn causes the handle base to slide over the coupler **22** whereby the lugs **30A** and **30B** become positively engaged in corresponding locking seats **68**.

Shaft **52** is associated with but not permanently joined, bonded, molded or glued, to handle assembly **50**. Shaft **52** is provided within assembly **50** in a manner that achieves a secure interconnection. Fluid level indicator blade **54** is affixed to the other end of the shaft **52** by die casting (or alternatively, by a staked attachment fitting **70** or other suitable mechanical connection). The die cast construction eliminates tolerance stack-up problems associated with prior arrangements, reduces the number of components, and provides a smooth transition fitting that does not catch in the guide tube. The indicator blade **54** is typically rounded or pointed at its free end to allow for easy

insertion into the coupler **22**, through the guide tube **10**, and through engine fitting **72**. The indicator blade also includes indicia, such as shaded area **74A** and arrows **74B** and **74C** on at least one of the faces of the blade, for indicating the fluid level when dipstick assembly **C** is inserted fully into stationary tube assembly **B** that extends from the engine fitting.

Engine fitting **72** is compression sealed or press fit within second opening **20** of the guide tube **10**. Alternatively, the fit may be a tight seal, a threaded fitting, or other connector, or the fit may involve bonding, gluing, molding, or other means of sealably connecting. A lip **76** prevents engine fitting **72** from complete insertion into elongated guide tube **10**. The opposite end of engine fitting **72** is attached or bonded to a fluid reservoir or tank, such as found in an internal combustion engine, where it is desirous to measure the fluid level within the reservoir. In one specific aspect, this engine fitting is made of steel and has a serrated outer surface **78** (although alternatively, the outer surface may be roughened, knurled, or of other texture).

With the engine fitting **72** connected to a fluid reservoir and providing access for dipstick assembly **C**, the opposite end of stationary tube assembly **B**, i.e., the coupler **22**, is secured at a convenient location remote from engine fitting **72**. The elongated through passageway that connects coupler **22** and engine fitting **72** thereby provides access to the fluid in the reservoir via dipstick assembly **C**. Specifically, fluid level indicator blade **54** is inserted through the coupler and guide tube **10** such that the free end of blade **54** is immersed into the fluid in the reservoir. It will be appreciated that since the shaft is bendable and rotatable, the guide tube can adopt twists and turns along its route and the dipstick assembly can accommodate the tortuous path. For the blade **54** to be fully

inserted, handle **56** must engage and interlock with coupler **22** and lugs **30A** and **30B** extending therefrom. Specifically, lugs **30A** and **30B** align with the open end of slot **64A** and **64B** respectively, whereby the handle is further forced over the coupler **22** resulting in lugs **30A** and **30B** following the curvilinear shape of slots **64A** and **64B** until locked in locking seats **68**. The result in the rotation by approximately 90° of the handle about the coupler **22** as lugs **30A** and **30B** move from the axial portion of the respective slots into the transverse portion and eventually the locking seat **68**.

A seal **80** (FIGURE 3) is located in the base of cavity **82**, and preferably glued, bonded or otherwise affixedly seated within the cap. The seal provides a pressure lock seal when the dipstick assembly is fully received in the guide tube. This seal has sufficient elasticity to allow compression of the seal by the coupler **22**. This bayonet type locking arrangement provides assurance that fluid level indicator blade **54** is properly positioned for accurate fluid level readings as well as providing a positive lock feature for assuring that handle **56** is locked to stationary tube assembly **B**. Moreover, the seal provides sufficient sealing capabilities to allow the engine, transmission, or other machinery to reach several atmospheres (preferably at least 1 to 1.5 atm.) of back pressure without leakage. In addition, when fully sealed, the seal prohibits contaminants from entering into the fluid reservoir where system integrity and reliability would be jeopardized, and prohibits unnecessary fluid loss from the assembly. When a compressible and resilient seal is employed, the seal functions to urge the handle and lugs into a locked position, e.g., locking the bayonet mechanism compresses the seal which in turn causes the seal to urge the handle into a locked position relative to the locking lugs.

In one aspect, the coupler **22** and guide tube **10** are fabricated from plastics while engine fitting **72** is manufactured of high heat tolerating metals or plastics. Handle **56** is typically a molded component to or in which flexible shaft **52** is directly molded, joined, pinned, or otherwise connected. The handle is dimensioned to overlie or encompass the coupler or spout in its locked position to prevent contaminants from entering the guide tube. In an alternative aspect of the invention, described below in connection with Figure 10, the handle is inserted into the spout. Moreover, the use of plastics can reduce corrosive effects and provides an overall reduction in system weight. Yet another advantage of using plastic in forming a number of the components is that the system can be color-coded for ease of use by the customer. Blade **54** is fabricated from steel or other comparable metals or plastics and is attached to flexible and rotating shaft **52** by attachment fitting **70** as described above. It will be appreciated, however, that other suitable materials may be used without departing from the scope and intent of the subject invention.

FIGURES 4 – 5 illustrate another aspect of the subject invention. In this arrangement, a different configuration grommet **90** is shown. It, too is of annular construction and preferably includes a series of legs **92** disposed in generally parallel relation and extending across the entire width of the annular grommet. That is, the legs are separated by groves **94** so that the legs extend outwardly a minor dimension on the order of approximately 0.10 inch. An opposite face of the grommet **96** has a general planar conformation and fits within the base of the cavity defined by the handle. Thus, as will be appreciated, the grommet may be adhesively secured or be appreciated, the grommet may be adhesively secured or interference fit into the base of the handle and is

adapted to engage against end **32** of the spout. The alternating legs and grooves on the face of the grommet that engages the end of the spout prevents a seal from being formed in this particular version, however, by forming the grommet from an elastomeric material such as neoprene, the positive locking capability described in association with the aspects of the invention illustrated in FIGURES 1-3, 10 and 12 is maintained. That is, the user encounters a positive lock feel as the lugs enter the locking seats in the end of the slots. The elastomeric nature of the grommet serves as an integral portion of the locking function as the lugs **30** extend through the grooves **64**, **66** in the handle. Engagement is made between the handle and the end of the spout. The lugs then pass the over-center position in the groove and urge the handle outwardly while maintaining the compressed relationship and ensuring a locked condition between the handle and the guide tube.

FIGURES 6-8 illustrate yet another version of a seal **100** that provides all of the same features and benefits of those shown and described in the earlier embodiments. FIGURE 6 and 7 illustrate two similar grommet seals **100** so that like components will be referred to by like reference numerals with a primed suffix (') in FIGURE 7. The grommet has an enlarged shoulder **102** at one end that is received in the base of the handle. The shoulder has an outer diameter sufficient to engage against the axial end of the spout and perform the combined sealing and locking function as described above. In addition, a seal is formed in a radial direction with the wall of the spout by providing a circumferentially continuous sealing bead **104** (FIGURE 6) or pair of beads **104**; **106** (FIGURE 7). In these arrangements, the sealing bead(s) is (are) integrally formed as a part of the grommet seal to reduce the number of components, eliminate additional assembly, and provide for an assembly that meets close tolerance specifications. Thus, as

best illustrated in FIGURE 8, once the handle is in the locked and sealed position, terminal end of the spout is sealed against shoulder **102**. In addition, the seal beads **104**, **106** engage the radial inner wall of the spout to provide an enhanced seal. In these aspects or arrangements, the seals form an interference fit with the handle. Thus, the enlarged shoulder **102** is dimensioned to form an interference fit in the base of the handle in addition to being sized for engagement with the terminal end of the spout. In substantially all other respects, these arrangements are identical to the aspects described above.

FIGURE 9 shows yet another aspect of the invention that provides both an effective seal and positive locking feature. Here, the grommet or seal **110** is integrally molded into the handle. The seal has an annular configuration that extends from the planar interior base of the handle. The seal is circumferentially continuous and has a tapered or flared radial outer face **112** that is dimensioned for sealing engagement with the spout. The tapered conformation serves the dual purpose of sealing the handle and spout, as well as providing the positive locking function described above. When the handle is in the fully locked position, the terminal end of the spout engages the integrally molded seal in the base of the cap in an axial direction and the tapered wall **112** sealingly engages the radial inner wall of the spout.

Referring now to Figure 10, Figure 10 illustrates a further aspect of the invention wherein handle **120** is inserted and lockable within opening **121** defined in expanded spout **122** on one end of tube **123**. Handle **120**, as illustrated, includes gripping knobs or areas **120A** and **120B** (handle **120** can alternatively include the gripping knobs illustrated in Figure 8). Handle **120** has the previously described bayonet connection, except that

handle **120** is inserted within spout **122** and engages locking lugs (not shown) protruding inwardly from the inner surface of spout **122**. As the handle **120** is inserted into spout **122**, a recessed area (not shown) and defined within shoulder **124** engages gasket **125**. Gasket **125** is compressed against shoulder **124** and the interior base of spout **122** as handle **120** is inserted into spout **122**. As handle **120** is inserted into spout **122** curvilinear channels **126** (having one open end) defined in side-wall **127** engage inwardly protruding locking lugs on spout **122**. Locking lugs travel along channels **126** until reaching area **128** at the closed end of channels **126**. A recess **129** defined at area **128** functions to secure the locking lugs in a locked position within channels **126**.

Rotatable dipstick shaft **130** is carried along with handle **120** as handle **120** is inserted into spout **122**. As described above, the distal end of rotatable dipstick shaft **130** has a blade (not shown) that is employed for measuring a fluid level. Rotatable dipstick shaft **130** is free to flex and rotate as it is inserted into spout **122** and travels along tube **123**.

Referring now to Figure 11, Figure 11 illustrates a rotatable shaft **140** that is over-molded by a dipstick handle such as illustrated in Figures 1-3 and 8-10. The rotatable shaft **140** is normally cleaned and polished to have smooth surface thereby enhancing the ability of shaft **140** to rotate within a dipstick handle. Shaft **140** has at least two chamfered regions **141A** and **141B**. These regions enhance the molding about shaft **140** as well as prevent shaft **140** from being pulled out of a handle. These regions can have any desirable configuration such as a flatten or nail head structure, semi-circular, among other configurations that permit rotation and prevent pull-out.

Shaft **140** also includes chamfered region **142**. A blade (not shown) having a fluid level indicator at its distal end is connected to shaft **140** at chamfered region **142**. The attachment can be achieved by any suitable method such as die-casting, staking, riveting, welding, among other conventional methods for attaching elongated metal articles.

Referring now to Figure 12, Figure 12 illustrates a retro-fit kit that can be employed for replacing conventional dipsticks with the inventive fluid level indicator. Kit **150** comprises compression sleeve **151** having threaded area **152** and compressive fitting **153**. Kit **150** further comprises stationary tube member **154** and compression nut **155**. Stationary tube member **154** typically comprises one of the stationary tubes illustrated in Figures 1, 3, and 8 – 10. The portion of compressive sleeve **151** in contact with stationary tube member **154** typically has a diamond knurled surface finish. In order to install kit **150** as a retrofit for an existing dipstick system, the existing dipstick system, which comprises the dipstick and the portion of the stationary tube contacting the existing dipstick, is removed, e.g., sawing, clipping, among other methods for cutting metal. Compressive nut **155** is slid over the existing stationary tube (after removing the original dipstick system). The stationary tube **154** including sleeve **151** are located in the stationary tube. Compressive nut **155** is contacted with threaded area **152** and tightened sufficiently to retain stationary tube **154** and sleeve **151** at a fixed position. Thereafter, the inventive dipstick system can be employed and locked into position by using the inventive bayonet connection.

Referring now to Figure 13, shows fluid level indicator assembly **160** comprising a cap locking assembly **161** shown in Figures 1-3, 8-9 and 10 or in aforementioned U.S.

Patent Application Serial No. 09/947,314. Cap locking assembly **161** is attached to stationary tube **162**. Stationary tube **162** is staked at **163** onto engine fitting **164**. Tube **162** and engine fitting **164** are illustrated in greater detail in Figures 14-16.

Figure 14 illustrates stationary tube **162** staked onto engine fitting **164**. The end of stationary tube **162** opposite from the engine fitting **164** contains a knurled region **170**. Region **170** is provided for enhancing the bond between tube **162** and an overmolded thermoplastic material (e.g., nylon 6,6) used in forming locking cap assembly **161**. Staking region **163** can be formed by using any suitable machine such those supplied by EZ Crimp (e.g., containing 8 jaws and reducing the diameter of the stationary tube from 0.50 to about 0.475). The degree of diameter reduction and length of staking region can vary widely.

In one aspect of the invention, the cap assembly is connected to the stationary tube without the aforementioned over-molding process. The cap assembly can be attached via a threaded connection, contacting the interior of the stationary tube and expanding the stationary tube into contact the coupler or cap assembly, among other methods for affixing the cap assembly.

Figures 15 and 16 illustrate greater detail of tube **162** and engine fitting **164**. Tube **162** can be fabricated from any suitable material such as ASTM J525, ASTM A513 Type 1 or 2 Alloy, among other materials capable of withstanding staking. Engine fitting **164** can also be fabricated from any suitable material such as 12L or 15 ASTM Alloy A108, lead free alloys, among other suitable materials. Tube **162** can be fabricated in accordance with any suitable method. One suitable method comprises shaping or bonding the tube into a desired configuration by employing commercially available

machines such as compression bending, rotary draw bending, among other apparatus. Engine fitting **164** can be shaped by any suitable method such as by a conventional screw machine operations. Engine fitting **164** can include an optional knurled region **180** for enhancing bond formed by staking at region **163**. Protuberance **181** about the exterior of engine fitting **164** is dimensioned to receive tube **162**. Engine fitting **164** is maintained at a predetermined location with respect to the engine's fluid reservoir by grooves **182** defined upon the surface of the engine fitting. Engine fitting **164** can also include protuberances or ribs **183**. Ribs **183** provide a surface that increases a bond between the engine fitting **164** and tube **162** when tube **162** is crimped or staked onto engine fitting **164**. While any suitable method such as crimping or staking can be used for connecting the engine fitting and tube, the selected method should deform the tube and provide a permanent and leak resistant bond.

The invention has been described with reference to certain aspects. Obviously, modifications and alterations will occur to others upon a reading and understanding of this specification. For example, although the described aspects extensively use plastic as the preferred material of construction, it is understood that other materials can be used for selected components if so desired. Likewise, mere reversal of components that achieve substantially the same function and result are contemplated. For instance, the seal and locking features can be achieved by differently configured seals and/or lug and slot arrangements without departing from the present invention. It is intended to include all such modifications and alterations insofar as they come within the scope of the appended claims or the equivalents thereof.

THE FOLLOWING IS CLAIMED:

1. An apparatus for measuring fluid levels in an associated fluid reservoir in an engine, transmission, or other machinery, said fluid level measuring apparatus comprising:

a shaft having first and second spaced ends;

a tube extending from the associated fluid reservoir having a first end for receiving the shaft therein; a fluid level indicator blade attached to the first end of the shaft and dimensioned for receipt through the stationary tube and into the reservoir for providing an indication of a fluid level and wherein the tube has a knurled section for receiving a coupler and an engine fitting compression fit onto a second end of the tube;

a handle associated with the shaft;

a locking assembly received on the handle and the stationary tube for selectively locking the handle in a locked position to the stationary tube upon complete insertion of the shaft into the tube; and

a compressible member interposed between the handle and the open end of the stationary end of the tube, wherein the compressible member comprises a seal face for sealing against the open end of the stationary tube and wherein the compressible member dimensioned to urge the handle toward the locked position and to maintain the reservoir at a predetermined pressure.

2. An apparatus comprising:

a tube comprising a first open end and at least one lug, and a second end comprising a fitting that engages a fluid reservoir,

a handle comprising at least one curvilinear slot defined in the handle wherein one end of said at least one slot is open and dimensioned to engage said at least one lug and wherein said at least one slot comprises an axial portion aligned generally with the direction of insertion of the shaft into the tube and a generally transverse portion,

a shaft rotatably associated with the handle wherein said shaft is associated with a fluid level indicator blade and;

a compressible gasket member located between the first open end of the tube and

the handle and wherein said compressible gasket member prevents fluid from leaking from the apparatus.

3. The apparatus of Claim 2 wherein said compressible gasket member provides a seal of capable of maintaining at least 1 atmosphere.

4. The apparatus of Claim 2wherein said shaft comprises at least one wire.

5. The apparatus of Claim 2 wherein said at least one lug extends outwardly or inwardly from the coupler.

6. The apparatus of Claim 2 wherein said handle is dimensioned to enclose at least a portion of said coupler, or to be received within the coupler.

7. The apparatus of Claim 2 wherein said annular seal comprises a compressible member that urges the handle and coupler into a locked position that is achieved when said at least one lug engages the locking seat.

8. The apparatus of Claim 2 wherein said tube has a knurled section for receiving a coupler.

9. The apparatus of Claim 2 wherein an engine fitting is compression fit onto a second end of the tube.

10. A kit comprising:

a sleeve having a threaded area and a compression fitting,

a coupler that is dimensioned to engage an open end of the sleeve and having at least one lug,

a handle comprising at least one slot defined in the handle wherein one end of said at least one slot is open and dimensioned to engage said at least one lug,

a shaft associated with the handle wherein said shaft is associated with a fluid level indicator blade;

an annular compressible gasket member located in the base of the handle; and,

a compression nut that is dimensioned for engaging the threaded area of the sleeve.

11. The kit of Claim 10 wherein the shaft is rotatably disposed in said handle.

12. The kit of Claim 10 further comprising a knurled section on said sleeve for receiving the coupler.

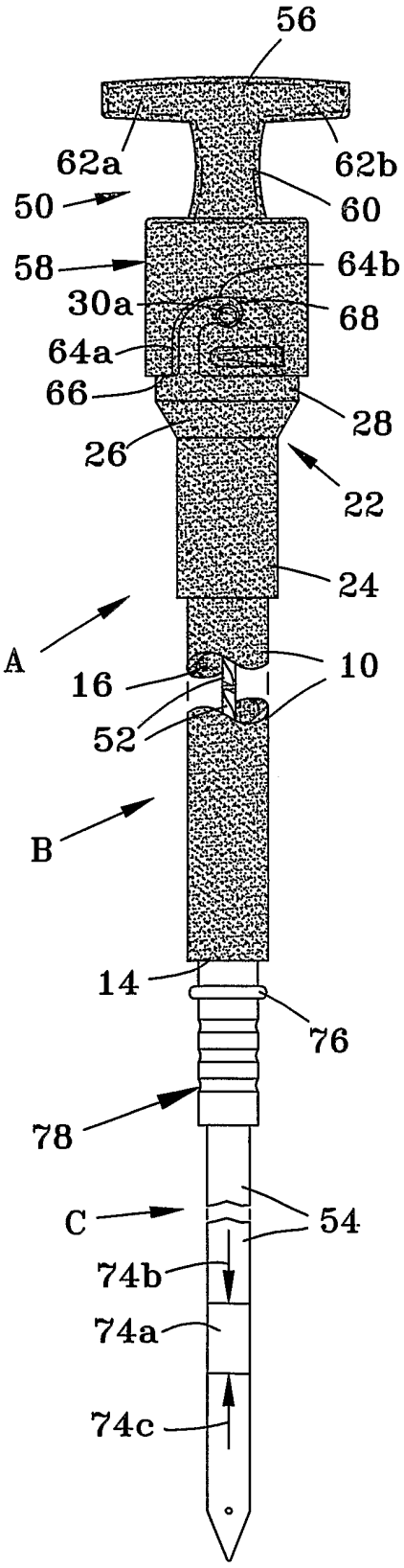

FIG.1

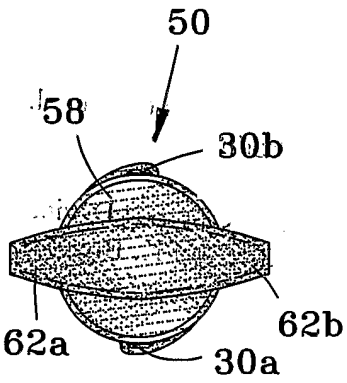

FIG.2

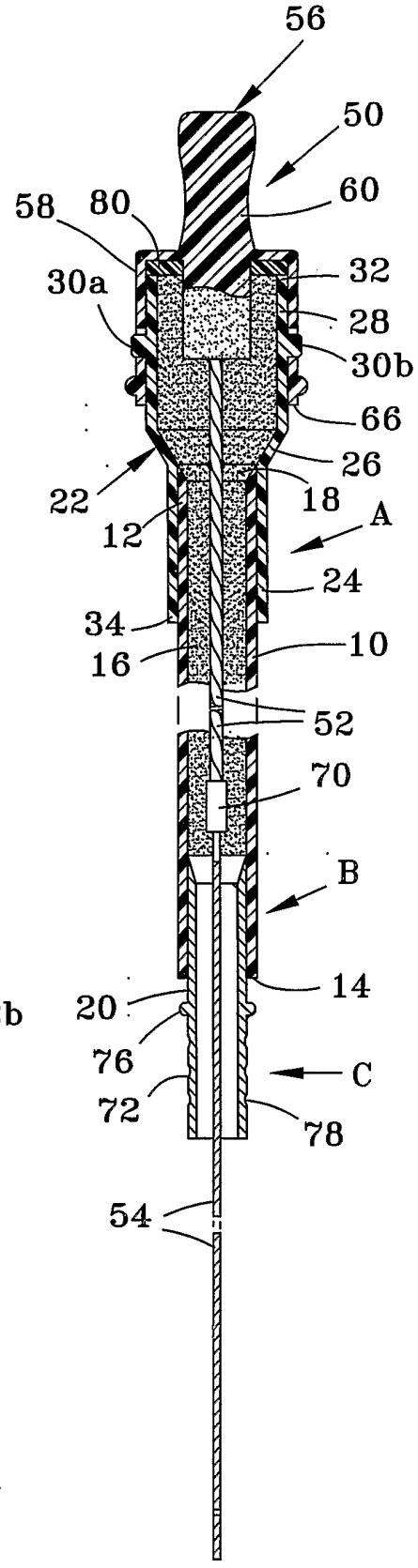

FIG.3

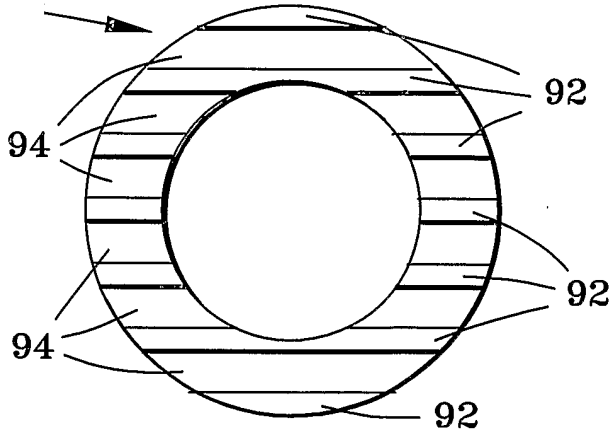

FIG.4

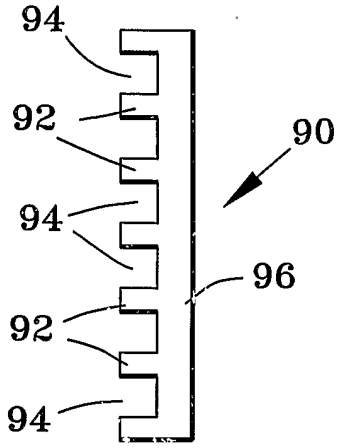

FIG.5

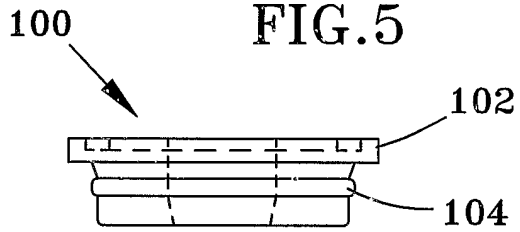

FIG.6

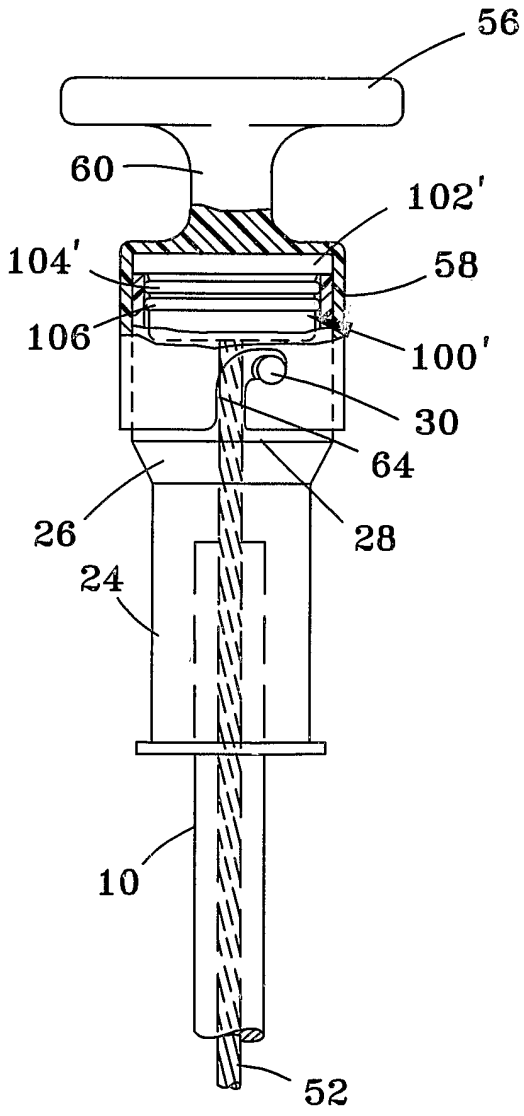

FIG.8

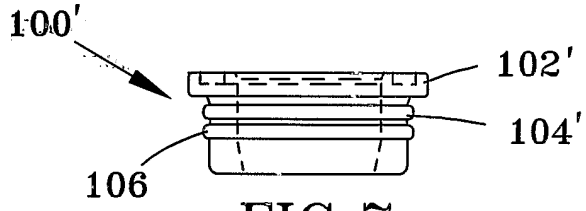

FIG.7

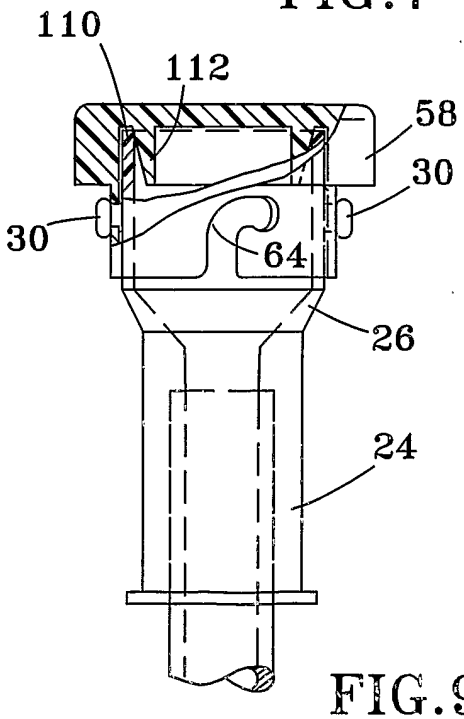

FIG.9

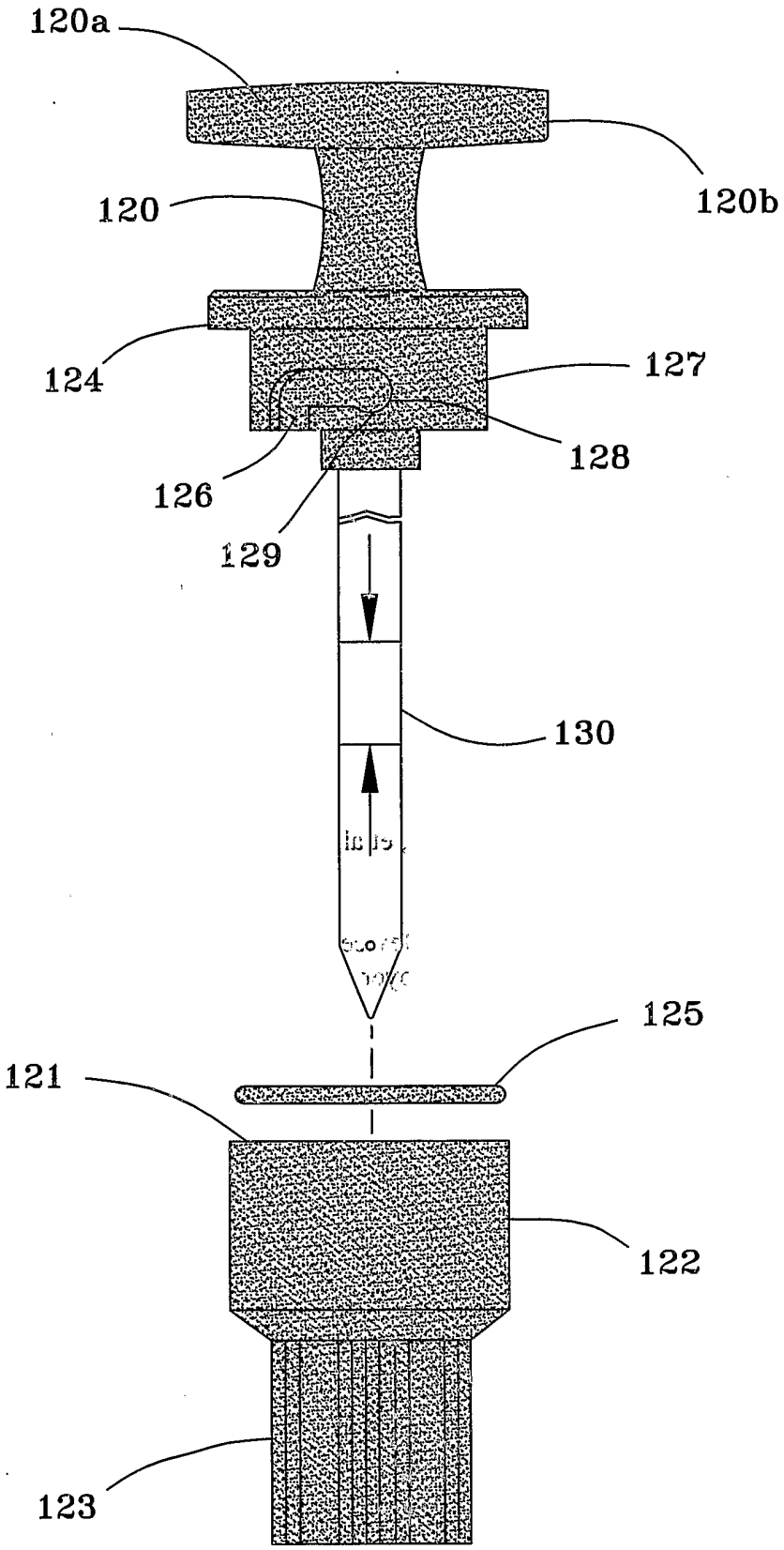

FIG.10

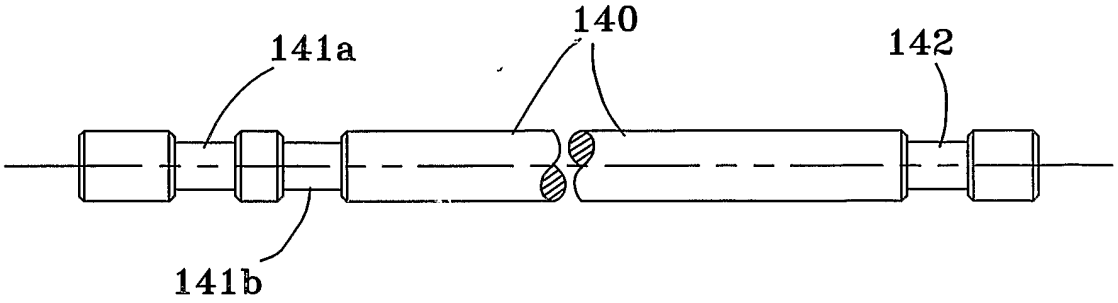

FIG.11

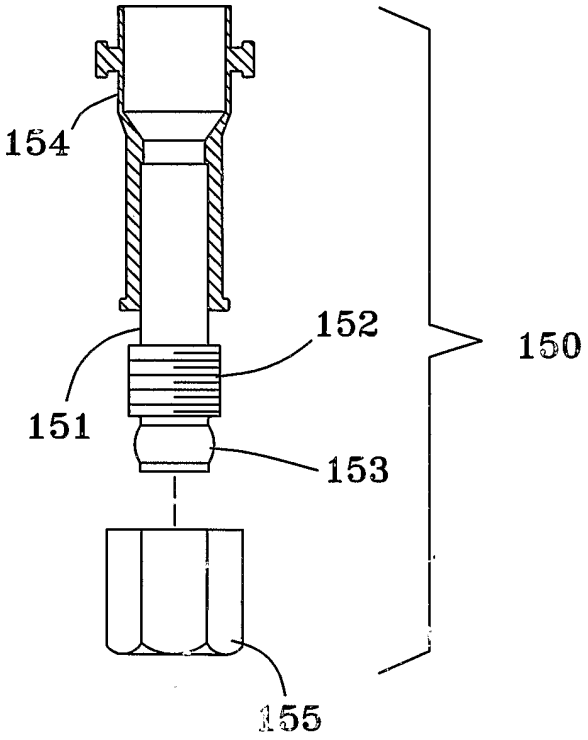

FIG.12

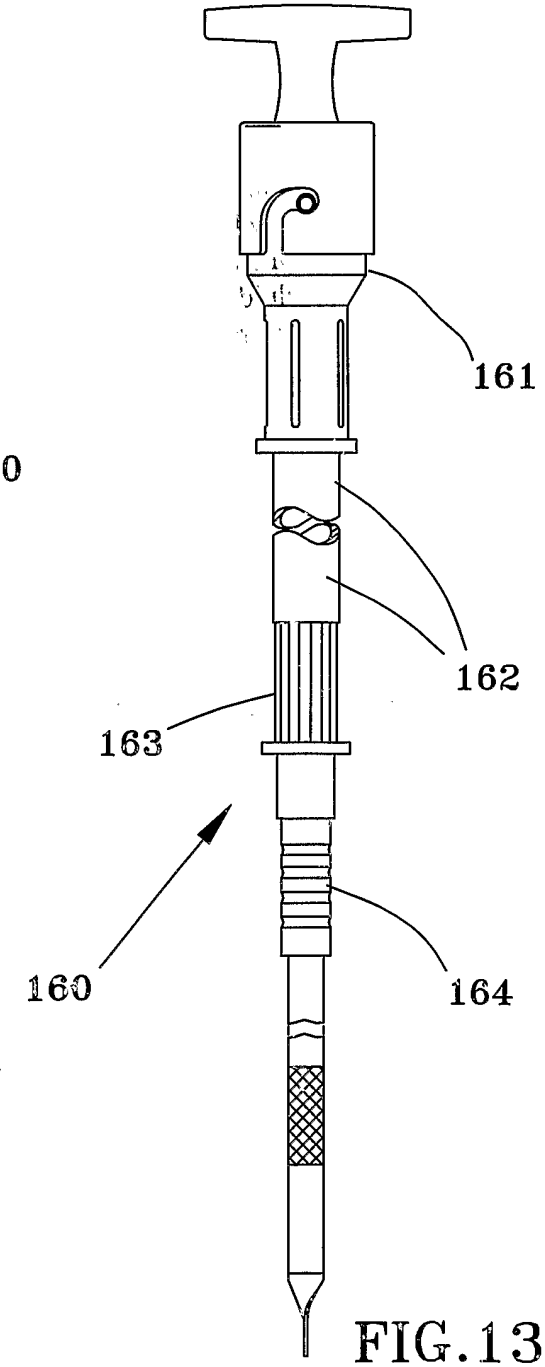

FIG.13

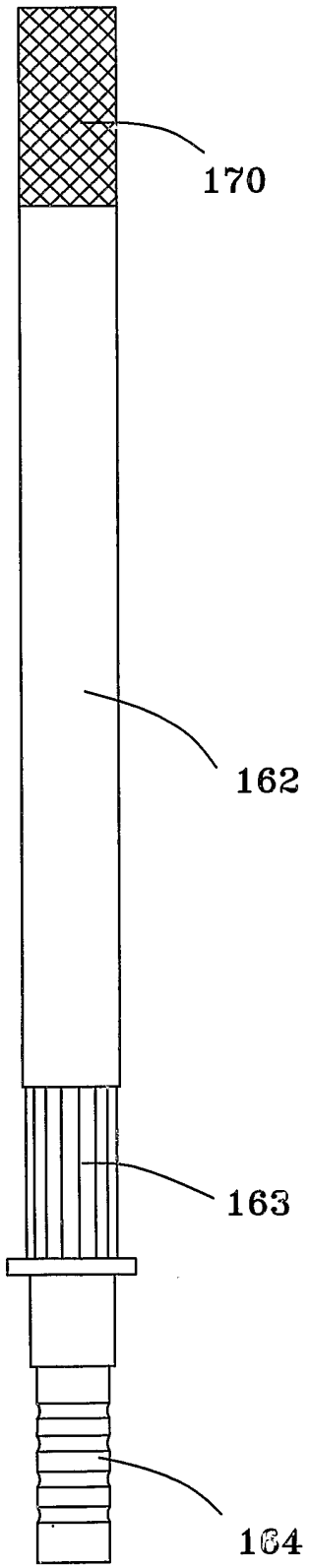

FIG.14

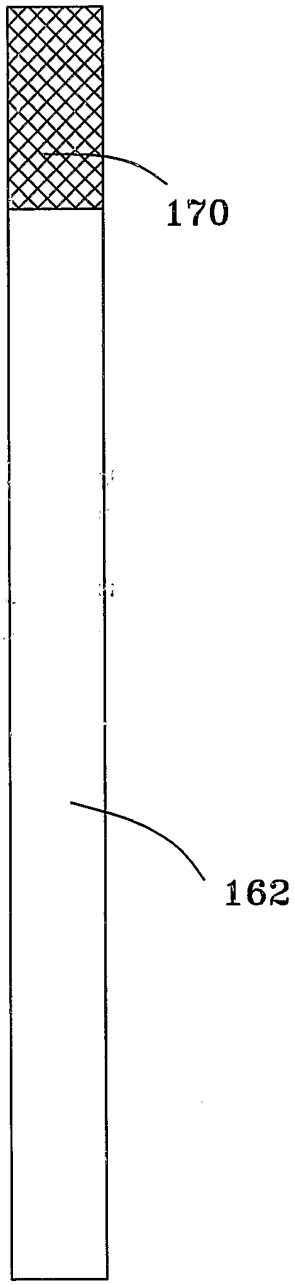

FIG.15

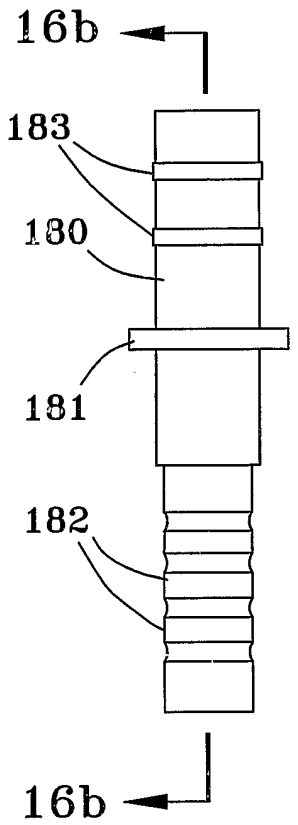

FIG.16a

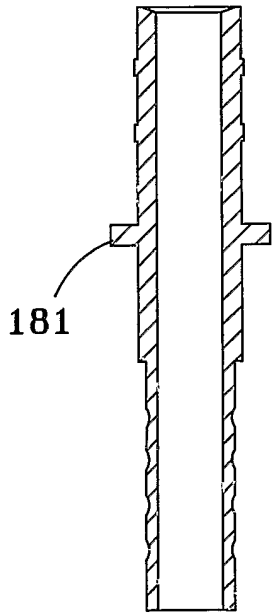

FIG.16b

INTERNATIONAL SEARCH REPORT

International Application No
PCT/US 02/31326

A. CLASSIFICATION OF SUBJECT MATTER
IPC 7 G01F23/04

According to International Patent Classification (IPC) or to both national classification and IPC

B. FIELDS SEARCHED

Minimum documentation searched (classification system followed by classification symbols)
IPC 7 G01F

Documentation searched other than minimum documentation to the extent that such documents are included in the fields searched

Electronic data base consulted during the international search (name of data base and, where practical, search terms used)

C. DOCUMENTS CONSIDERED TO BE RELEVANT

Category °	Citation of document, with indication, where appropriate, of the relevant passages	Relevant to claim No.
X	US 5 829 153 A (HITCHOCK ROBERT S) 3 November 1998 (1998-11-03) cited in the application	2-7
A	the whole document	1,10-12
P,X	US 6 453 740 B1 (HICKS KAREN S ET AL) 24 September 2002 (2002-09-24) cited in the application	2-7,9-11
A	the whole document	1,8,12
P,X	US 6 314 808 B1 (HICKS KAREN S ET AL) 13 November 2001 (2001-11-13) cited in the application	2-7,9-11
A	the whole document	1,8,12

-/--

[X] Further documents are listed in the continuation of box C.

[X] Patent family members are listed in annex.

° Special categories of cited documents :

"A" document defining the general state of the art which is not considered to be of particular relevance

"E" earlier document but published on or after the international filing date

"L" document which may throw doubts on priority claim(s) or which is cited to establish the publication date of another citation or other special reason (as specified)

"O" document referring to an oral disclosure, use, exhibition or other means

"P" document published prior to the international filing date but later than the priority date claimed

"T" later document published after the international filing date or priority date and not in conflict with the application but cited to understand the principle or theory underlying the invention

"X" document of particular relevance; the claimed invention cannot be considered novel or cannot be considered to involve an inventive step when the document is taken alone

"Y" document of particular relevance; the claimed invention cannot be considered to involve an inventive step when the document is combined with one or more other such documents, such combination being obvious to a person skilled in the art.

"&" document member of the same patent family

Date of the actual completion of the international search	*Date of mailing of the international search report*
20 January 2003	28/01/2003

Name and mailing address of the ISA	Authorized officer
European Patent Office, P.B. 5818 Patentlaan 2 NL – 2280 HV Rijswijk Tel. (+31–70) 340–2040, Tx. 31 651 epo nl, Fax: (+31–70) 340–3016	Boerrigter, H

Form PCT/ISA/210 (second sheet) (July 1992)

INTERNATIONAL SEARCH REPORT

International Application No
PCT/US 02/31326

C.(Continuation) DOCUMENTS CONSIDERED TO BE RELEVANT

Category °	Citation of document, with indication,where appropriate, of the relevant passages	Relevant to claim No.
A	US 5 485 681 A (HITCHCOCK ROBERT S) 23 January 1996 (1996-01-23) cited in the application the whole document	1-12
A	GB 2 096 320 A (ROLLS ROYCE) 13 October 1982 (1982-10-13) the whole document	1-12
A	DE 297 09 019 U (LETZGUS ANDREAS) 17 July 1997 (1997-07-17) the whole document	1-12

INTERNATIONAL SEARCH REPORT

Information on patent family members

International Application No
PCT/US 02/31326

Patent document cited in search report		Publication date	Patent family member(s)		Publication date
US 5829153	A	03-11-1998	NONE		
US 6453740	B1	28-02-2002	US	6314808 B1	13-11-2001
			US	2002023488 A1	28-02-2002
			US	2002108438 A1	15-08-2002
US 6314808	B1	13-11-2001	US	2002108438 A1	15-08-2002
			US	2002023488 A1	28-02-2002
US 5485681	A	23-01-1996	NONE		
GB 2096320	A	13-10-1982	NONE		
DE 29709019	U	17-07-1997	DE	29709019 U1	17-07-1997