(12) INTERNATIONAL APPLICATION PUBLISHED UNDER THE PATENT COOPERATION TREATY (PCT)

(19) World Intellectual Property Organization
International Bureau

(43) International Publication Date
15 December 2016 (15.12.2016)

WIPO | PCT

(10) International Publication Number
WO 2016/200936 A1

(51) International Patent Classification:
H02K 5/22 (2006.01) *H02K 3/28* (2006.01)

(21) International Application Number:
PCT/US2016/036442

(22) International Filing Date:
8 June 2016 (08.06.2016)

(25) Filing Language: English

(26) Publication Language: English

(30) Priority Data:
14/738,053 12 June 2015 (12.06.2015) US

(71) Applicant: **REMY TECHNOLOGIES, L.L.C.** [US/US]; 600 Corporation Drive, 2nd Floor, Pendleton, Indiana 46064 (US).

(72) Inventor: **NEET, Kirk**; 600 Corporation Drive, Pendleton, IN 46064 (US).

(74) Agent: **KERNUS, Victor**; Cantor Colburn LLP, 20 Church Street, 22nd Floor, Hartford, Connecticut 06103 (US).

(81) Designated States *(unless otherwise indicated, for every kind of national protection available)*: AE, AG, AL, AM, AO, AT, AU, AZ, BA, BB, BG, BH, BN, BR, BW, BY, BZ, CA, CH, CL, CN, CO, CR, CU, CZ, DE, DK, DM, DO, DZ, EC, EE, EG, ES, FI, GB, GD, GE, GH, GM, GT, HN, HR, HU, ID, IL, IN, IR, IS, JP, KE, KG, KN, KP, KR, KZ, LA, LC, LK, LR, LS, LU, LY, MA, MD, ME, MG, MK, MN, MW, MX, MY, MZ, NA, NG, NI, NO, NZ, OM, PA, PE, PG, PH, PL, PT, QA, RO, RS, RU, RW, SA, SC, SD, SE, SG, SK, SL, SM, ST, SV, SY, TH, TJ, TM, TN, TR, TT, TZ, UA, UG, US, UZ, VC, VN, ZA, ZM, ZW.

(84) Designated States *(unless otherwise indicated, for every kind of regional protection available)*: ARIPO (BW, GH, GM, KE, LR, LS, MW, MZ, NA, RW, SD, SL, ST, SZ, TZ, UG, ZM, ZW), Eurasian (AM, AZ, BY, KG, KZ, RU, TJ, TM), European (AL, AT, BE, BG, CH, CY, CZ, DE, DK, EE, ES, FI, FR, GB, GR, HR, HU, IE, IS, IT, LT, LU, LV, MC, MK, MT, NL, NO, PL, PT, RO, RS, SE, SI, SK, SM, TR), OAPI (BF, BJ, CF, CG, CI, CM, GA, GN, GQ, GW, KM, ML, MR, NE, SN, TD, TG).

Declarations under Rule 4.17:

— *as to applicant's entitlement to apply for and be granted a patent (Rule 4.17(ii))*

— *as to the applicant's entitlement to claim the priority of the earlier application (Rule 4.17(iii))*

Published:

— *with international search report (Art. 21(3))*

(54) Title: TERMINAL ASSEMBLY FOR AN ELECTRIC MACHINE

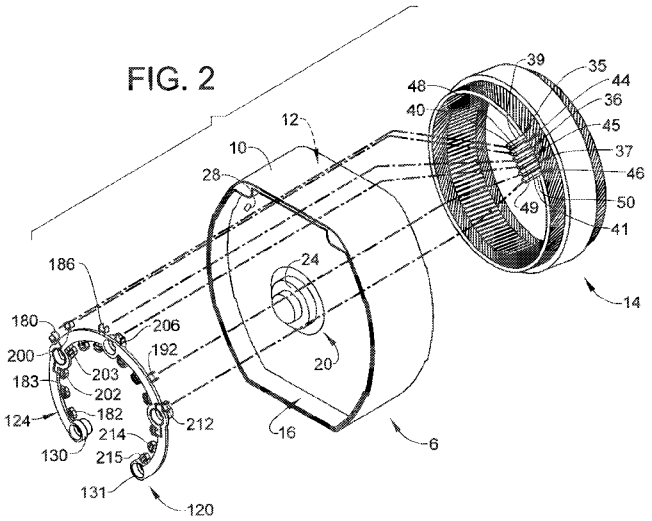

(57) Abstract: An alternator includes a housing, and a stator fixedly mounted relative to the housing. The stator includes a stator winding. The stator winding includes at least five stator leads extending from the stator in an arc that is less than about 90°. A terminal assembly is mounted to an outer surface of the housing and connected with the at least five stator leads. The terminal assembly includes a body formed from a non-electrically conductive material, and a plurality of conductive members at least partially covered by the body. The plurality of conductive members is associated with the stator winding. Each of the plurality of conductive members includes plurality of input connectors spread out along the body in an arc that is greater than 90°.

WO 2016/200936 A1

TERMINAL ASSEMBLY FOR AN ELECTRIC MACHINE

BACKGROUND OF THE DISCLOSURE

[0001] Exemplary embodiments pertain to the art of electric machines and, more particularly, to a terminal assembly for an electric machine.

[0002] Many motor vehicles include an alternator that transforms mechanical energy into electrical energy that is used to charge an onboard battery. Generally, alternators include a rotor having rotor windings that are rotated within a stator having stator windings. The rotor may include a pair of slip rings that are electrically coupled to the rotor windings. When the rotor is rotated within the stator, an electrical field is developed inducing an electrical current in the stator windings. The current is passed from the stator to terminal assembly having a number of conductive members. Each conductive member of the terminal assembly creates an electrical connection between the stator winding and a plurality of diodes mounted to a housing of the alternator.

BRIEF DESCRIPTION OF THE DISCLOSURE

[0003] Disclosed is an alternator including a housing, and a stator fixedly mounted relative to the housing. The stator includes a stator winding. The stator winding includes at least five stator leads extending from the stator in an arc that is less than about 90°. A terminal assembly is mounted to an outer surface of the housing and connected with the at least five stator leads. The terminal assembly includes a body formed from a non-electrically conductive material, and a plurality of conductive members at least partially covered by the body. The plurality of conductive members is associated with the stator winding. Each of the plurality of conductive members includes plurality of input connectors spread out along the body in an arc that is greater than 90°.

[0004] Also disclosed is an alternator including a housing and a stator fixedly mounted relative to the housing. The stator includes a first stator winding group and a second stator winding group. The first and second stator winding groups include at least five stator leads extending from the stator in an arc that is less than about 90°. A terminal assembly is mounted to an outer surface of the housing and connected with the at least five stator leads. The terminal assembly includes a body formed from a non-electrically conductive material. A first plurality of conductive members is at least partially covered by the body. The first plurality of conductive members is associated with the first stator winding group. A second plurality of conductive members is at least partially covered by the body. The second

plurality of conductive members is associated with the second stator winding group. Each of the first and second pluralities of conductive members includes a plurality of input connectors. The plurality of input connectors of each of the first and second plurality of conductive members is spread out along the body in an arc that is greater than 90°.

[0005] Further disclosed is an electric machine including a housing and a stator fixedly mounted relative to the housing. The stator includes a first plurality of stator phase windings having a first plurality of stator leads and a second plurality of stator phase windings having a second plurality of stator leads. A terminal assembly is mounted to the housing and connected with each of the first and second pluralities of stator leads. The terminal assembly includes a body formed from a non-electrically conductive material. A first plurality of conductive members is at least partially covered by the body. The first plurality of conductive members is associated with the first plurality of stator phase windings. A second plurality of conductive members is at least partially covered by the body. The second plurality of conductive members is associated with the second plurality of stator phase windings. None of the first plurality of conductive members radially overlaps another one of the first plurality of first conductive members and no more than one of the first plurality of conductive members radially overlaps one of the second plurality of conductive members, and none of the second plurality of conductive members radially overlaps another none of the plurality of second conductive members and no more than one of the second plurality of conductive members radially overlaps one of the first plurality of conductive members.

BRIEF DESCRIPTION OF THE DRAWINGS

[0006] The following descriptions should not be considered limiting in any way. With reference to the accompanying drawings, like elements are numbered alike:

[0007] FIG. 1 depicts an electric machine in the form of an alternator including a terminal assembly, in accordance with an exemplary embodiment;

[0008] FIG. 2 depicts a partially exploded view of the alternator of FIG. 1;

[0009] FIG. 3 depicts a schematic diagram illustrating electrical connections through the terminal assembly, in accordance with an exemplary embodiment; and

[0010] FIG. 4 depicts a plan view of the terminal assembly of FIG. 1.

DETAILED DESCRIPTION OF THE DISCLOSURE

[0011] A detailed description of one or more embodiments of the disclosed apparatus and method are presented herein by way of exemplification and not limitation with reference to the Figures.

[0012] An electric machine, in accordance with an exemplary embodiment, is indicated generally at 2, in FIG. 1. Electric machine 2 is shown in the form of an alternator 4 having a housing 6. Housing 6 includes an outer surface 10 that defines an interior portion 12 (FIG. 2). A stator 14 is arranged in interior portion 12. A rotor (not shown) is also arranged in interior portion 12. As shown in FIG. 2, housing 6 includes an external surface 16 that provides a mounting surface (not separately labeled) for various electrical connections, as will be more fully described below. External surface 16 includes a bearing support portion 24 that receives a bearing (not shown) associated with the end of the rotor shaft. External surface 16 is also shown to include a number of openings, one of which is indicated at 28, for receiving a corresponding one of a plurality of stator windings 30.

[0013] In the exemplary embodiment shown, stator 14 includes a three-phase stator winding 32 comprising two three-phase winding groups 33 and 34, as shown in FIG. 3. Stator 14 may also include a stator winding with one five phase winding or one seven phase winding as known by one of ordinary skill in the art. Stator winding group 33 defines a first wye stator winding group , and stator winding group 34 defines a second wye stator winding group . First wye stator winding group 33 includes a first phase 35, a second phase 36 and a third phase 37. Each phase 35, 36, and 37 includes a corresponding stator lead 39, 40 and 41 that passes from stator 14 through housing 6. Similarly, second wye stator winding group 34 includes a first phase 44, a second phase 45 and a third phase 46. Each phase 44, 45 and 46 includes a corresponding stator lead 48, 49, and 50 that passes through housing 6.

[0014] As also shown in FIG. 3, three-phase stator winding 32 is electrically connected to a plurality of diode pairs 55. More specifically, first phase 35 of first wye stator winding group 33 is connected to a first diode pair 58, second phase 36 of first wye stator winding group 33 is connected to a second diode pair 59 and third phase 37 of first wye stator winding group 33 is connected to a third diode pair 60. Similarly, first phase 44 of second wye stator winding group 34 is connected to a fourth diode pair 61, second phase 45 of second wye stator winding group 34 is connected to a fifth diode pair 62, and third phase 46 of second wye stator winding group 34 is connected to a sixth diode pair 63.

[0015] First diode pair 58 includes a first diode 66 including an input 67 and an output 68 and a second diode 70 having an input 71 and an output 72. Second diode pair 59

includes a third diode 74 including an input 75 and an output 76 and a fourth diode 78 having an input 79 and an output 80. Third diode pair 60 includes a fifth diode 82 including an input 83 and an output 84 and a sixth diode 86 having an input 87 and an output 88. Fourth diode pair 61 includes a seventh diode 90 including an input 91 and an output 92 and an eighth diode 94 having an input 95 and an output 96. Fifth diode pair 62 includes a ninth diode 98 including an input 99 and an output 100 and a tenth diode 102 having an input 103 and an output 104. Sixth diode pair 63 includes an eleventh diode 106 including an input 107 and an output 108 and a twelfth diode 110 having an input 111 and an output 112. Each diode pair 58-63 is connected to one of the plurality of leads, such as stator lead 41, of three-phase stator winding 32 through a terminal assembly 120 arranged on alternator 4.

[0016] In accordance with an exemplary embodiment, terminal assembly 120 includes a body 124 formed from an electrically insulated material. Body 124 may extend from a first end 130 to a second end 131 through an intermediate portion 132 having radially inwardly facing surface 133 and a radially outwardly facing surface 134. Body 124 includes a plurality of mounting sections 136-140 that provide an interface between terminal assembly 120 and housing 6. More specifically, each mounting section 136-140 includes a corresponding opening 142-146 that receives a mechanical fastener (not shown) that secures terminal assembly 120 to housing 6 external surface 16.

[0017] In further accordance with an exemplary embodiment, terminal assembly 120 includes a plurality of conductive members 160 that are encased by body 124 and serve as an interface between three-phase stator winding 32 and diode pairs 58-63. Conductive members 160 includes a first wye, first conductive member 162, a first wye, second conductive member 163, and a first wye, third conductive member 164. Terminal assembly 120 also includes a second wye, first conductive member 168, a second wye, second conductive member 169, and a second wye, third conductive member 170.

[0018] First wye, first conductive member 162 includes an input connector 180 electrically coupled to first phase 35 of first wye winding group 33, a first output connector 182 electrically coupled to input 67 of first diode 66 and a second output connector 183 electrically coupled to input 71 of second diode 70. First wye, second conductive member 163 includes an input connector 186 electrically coupled to second phase 36 of first wye winding group 33, a first output connector 188 electrically coupled to input 75 of third diode 74 and a second output connector 189 electrically coupled to input 79 of fourth diode 78. First wye, third conductive member 164 includes an input connector 192 electrically coupled to third phase 37 of first wye winding group 33, a first output connector 194 electrically

coupled to input 83 of fifth diode 82 and a second output connector 195 electrically coupled to input 87 of sixth diode 86. Each input connector 180, 186 and 192 extends from radially outwardly facing surface 134 and each output connector 182, 183, 188, 189, 194, 195, 202, 203, 208, 209, 214 and 215 extends from radially inwardly facing surface 133.

[0019] Similarly, second wye, first conductive member 168 includes an input connector 200 electrically coupled to first phase 44 of second wye winding group 34, a first output connector 202 electrically coupled to input 91 of seventh diode 90 and a second output connector 203 electrically coupled to input 95 of eighth diode 94. Second wye, second conductive member 169 includes an input connector 206 electrically coupled to second phase 45 of second wye winding group 34, a first output connector 208 electrically coupled to input 99 of ninth diode 98 and a second output connector 209 electrically coupled to input 103 of tenth diode 102. Second wye, third conductive member 170 includes an input connector 212 electrically coupled to third phase 47 of second wye winding group 34, a first output connector 214 electrically coupled to input 107 of eleventh diode 106 and a second output connector 215 electrically coupled to input 111 of twelfth diode 110. Each input connector 180, 186 and 192 extends from radially outwardly facing surface 134 and each output connector 182, 183, 188, 189, 194, 195, 202, 203, 208, 209, 214 and 215 extends from radially inwardly facing surface 133.

[0020] In the exemplary embodiment shown, first wye, third conductive member 164 radially, inwardly overlaps second wye, third conductive member 170 at mounting section 139 and second wye, first conductive member 168 radially inwardly overlaps first wye, first conductive member 162 at mounting section 137. In other words, only one of conductive members 162-164 associated with first wye windings group 33 radially inwardly overlaps one of conductive members 168-170 associated with second wye windings group 34, and only one of conductive members 168-170 associated with second wye windings group 34 radially inwardly overlaps one of conductive members 162-164 associated with first wye windings 33.

[0021] Further, while stator leads extend from the stator 14 in an arc that is less than about 90°, input connectors 180, 186, 192, 200, 206, 212 of first wye conductive members 162-164 and second wye conductive members 168-170 are spread out in an arc that is greater than 90°. One or more ofstator leads 39-41 and/or 48-50 may be routed from inside the arc to outside the arc. In this manner stator leads 39-41 and/or 48-50 may be connected to input connectors that may reside outside the arc.

[0022] In accordance with another aspect of an exemplary embodiment, stator leads 39-41 and/or 48-50 may extend from stator 14 in an arc that is less than 75°. In accordance with still another aspect of an exemplary embodiment, input connectors 180, 186, 192, 200, 206, 212 of the first wye conductive members 162-164 and second wye conductive members 168-170 may be spread out in an arc of 140° or more. Limiting the number of terminals that radially inwardly overlap reduces an overall width of the terminal assembly. Limiting terminal overlaps also reduces heat buildup in the terminal assembly. Further, spreading out the input connectors of the conductive members along an arc that is greater than 90° enables each conductive member to be shorter thereby reducing the amount of raw materials needed to form the terminal assembly.

[0023] For example, input connectors and diodes may be spread out on an arc that is greater than 90° and less than about 300°. Each conductive member includes an input connector configured to be electrically bonded (such as weld, solder and the like) to one or more stator leads, and output connecters which are configured to be electrically bonded to a diode. Since the diodes are spread out on an arc greater than about 90°, all of the output connectors are spread out on an arc greater than 90°. To minimize radial overlapping of the conductive members, all of the input connectors are also spread out on an arc greater than 90°. Therefore the stator leads may be routed from the stator at an arc less 90° to an arc which is greater than 90° to be electrically connected to the input connectors of the conductive members.

[0024] The term “about” is intended to include the degree of error associated with measurement of the particular quantity based upon the equipment available at the time of filing the application. For example, “about” can include a range of ± 8% or 5%, or 2% of a given value.

[0025] The terminology used herein is for the purpose of describing particular embodiments only and is not intended to be limiting of the disclosure. As used herein, the singular forms “a”, “an” and “the” are intended to include the plural forms as well, unless the context clearly indicates otherwise. It will be further understood that the terms “comprises” and/or “comprising,” when used in this specification, specify the presence of stated features, integers, steps, operations, elements, and/or components, but do not preclude the presence or addition of one or more other features, integers, steps, operations, element components, and/or groups thereof.

[0026] While the disclosure is provided in detail in connection with only a limited number of embodiments, it should be readily understood that the disclosure is not limited to

such disclosed embodiments. Rather, the disclosure can be modified to incorporate any number of variations, alterations, substitutions or equivalent arrangements not heretofore described, but which are commensurate with the spirit and scope of the disclosure. Additionally, while various embodiments of the disclosure have been described, it is to be understood that the exemplary embodiment(s) may include only some of the described exemplary aspects. Accordingly, the disclosure is not to be seen as limited by the foregoing description, but is only limited by the scope of the appended claims.

CLAIMS

What is claimed is:

1. An alternator comprising:

a housing;

a stator fixedly mounted relative to the housing, the stator including a stator winding, the stator winding including at least five stator leads extending from the stator in an arc that is less than about 90°; and

a terminal assembly mounted to an outer surface of the housing and connected with the at least five stator leads, the terminal assembly comprising:

a body formed from a non-electrically conductive material; and

a plurality of conductive members at least partially covered by the body, the plurality of conductive members being associated with the stator winding, wherein

each of the plurality of conductive members including a plurality of input connectors spread out along the body in an arc that is greater than 90°.

2. The alternator according to claim 1, wherein each of the plurality of conductive members includes at least two output connectors, the input connector of each of the plurality of conductive members being electrically connected to the stator winding.

3. The alternator according to claim 2, wherein the body includes a radially inwardly facing surface and a radially outwardly facing surface, the input connector of the plurality of conductive members being arranged on the radially outwardly facing surface.

4. The alternator according to claim 3, wherein the two output connectors of the plurality of conductive members is arranged on the radially inwardly facing surface.

5. The alternator according to claim 1, wherein the body includes a plurality of mounting sections receiving a mechanical fastener joining the terminal assembly to the housing.

6. The stator winding according to claim 1, wherein the at least five stator leads extend from the stator in an arc that is less than 75°.

7. The stator according to claim 6, wherein all of the at least five stator leads extend from the stator in an arc that is less than 75°.

8. The stator according to claim 7 wherein at least one of the at least five stator leads is routed from inside the 75° arc and connected to one of the output connectors which is outside the 90° arc.

9. The stator according to claim 1, wherein the at least five stator leads is at least 6 stator leads.

10. The stator according to claim 1, wherein the stator winding includes a plurality of stator leads, all of the plurality of stator leads extending from the stator in an arc that is less than 90°.

11. An alternator comprising:

a housing;

a stator fixedly mounted relative to the housing, the stator including a first stator winding group and a second stator winding group, the first and second stator windings groups including at least five stator leads extending from the stator in an arc that is less than about 90°; and

a terminal assembly mounted to an outer surface of the housing and connected with the at least five stator leads, the terminal assembly comprising:

a body formed from a non-electrically conductive material; and

a first plurality of conductive members at least partially covered by the body, the first plurality of conductive members being associated with first the stator winding group;

a second plurality of conductive members at least partially covered by the body, the second plurality of conductive members being associated with the second stator winding group, each of the first and second pluralities of conductive members including plurality of input connectors, wherein the plurality of input connectors of each of the first and second plurality of conductive members is spread out along the body in an arc that is greater than 90°.

12. The alternator according to claim 11, wherein the no more than one of the first plurality of conductive members overlaps the one of the second plurality of conductive members at one of the plurality of mounting sections.

13. The alternator according to claim 11, wherein the no more than one of the second plurality of conductive members overlaps the one of the first plurality of conductive members at one of the plurality of mounting sections.

14. The alternator according to claim 11, wherein each of the first plurality of stator leads and the second plurality of stator leads extend from the stator along an arc that is less than 90°.

15. The alternator according to claim 14, wherein the first plurality of conductive members and the second plurality of conductive members extend about the housing along an arc that is greater than 90°.

16. The stator according to claim 11 wherein at least one stator lead is routed from inside the 90° arc and connected to one of the output connectors which is outside the 90° arc.

17. An electric machine comprising:

a housing;

a stator fixedly mounted relative to the housing, the stator including a first plurality of stator phase windings having a first plurality of stator leads and a second plurality of stator phase windings having a second plurality of stator leads; and

a terminal assembly mounted to the housing and connected with each of the first and second pluralities of stator leads, the terminal assembly comprising:

a body formed from a non-electrically conductive material; and

a first plurality of conductive members at least partially covered by the body, the first plurality of conductive members being associated with the first plurality of stator phase windings;

a second plurality of conductive members at least partially covered by the body, the second plurality of conductive members being associated with the second plurality of stator phase windings,

wherein none of the first plurality of conductive members radially overlaps another one of the first plurality of first conductive members and no more than one of the first plurality of conductive members radially overlaps one of the second plurality of conductive members, and

wherein none of the second plurality of conductive members radially overlaps another none of the plurality of second conductive members and no more than one of the second plurality of conductive members radially overlaps one of the first plurality of conductive members.

18. The electric machine according to claim 17, wherein each of the first plurality of conductive members includes an input connector electrically connected with a corresponding one of the first plurality of stator phase windings and at least two output connectors, and each of the second plurality of conductive members includes an input connector electrically connected with a corresponding one of the second plurality of stator phase windings and at least two output connectors.

19. The electric machine according to claim 18, wherein each of the first plurality of stator leads and the second stator leads extend from the stator along an arc that is less than 90°.

20. The electric machine according to claim 18, wherein the first plurality of conductive members and the second plurality of conductive members extend about the housing along an arc that is greater than 90°.

FIG. 1

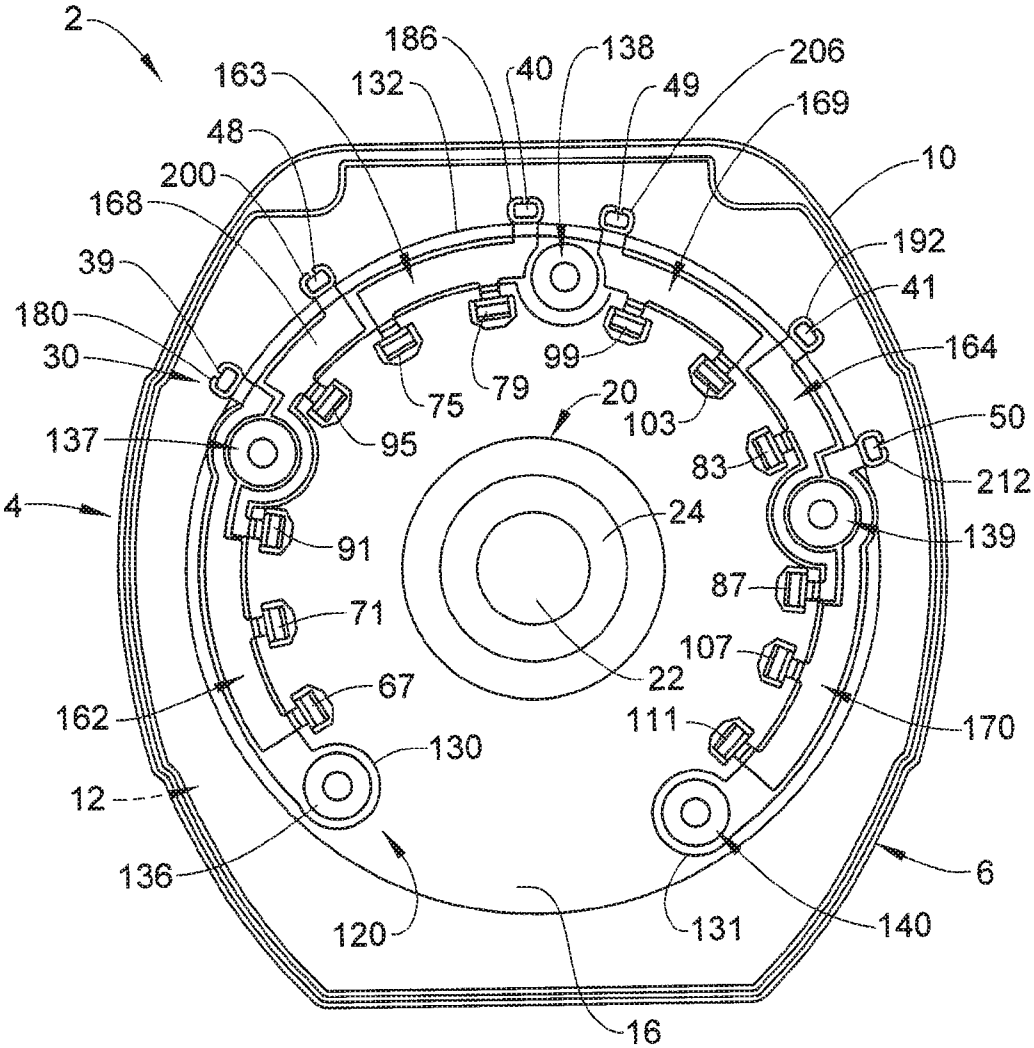
2
186
138
206
163
132
40
49
169
48
10
200
168
192
39
41
180
99
164
30
79
20
75
103
50
137
95
83
212
4
24
139
91
87
71
107
22
67
162
111
170
130
12
136
6
120
131
140
16

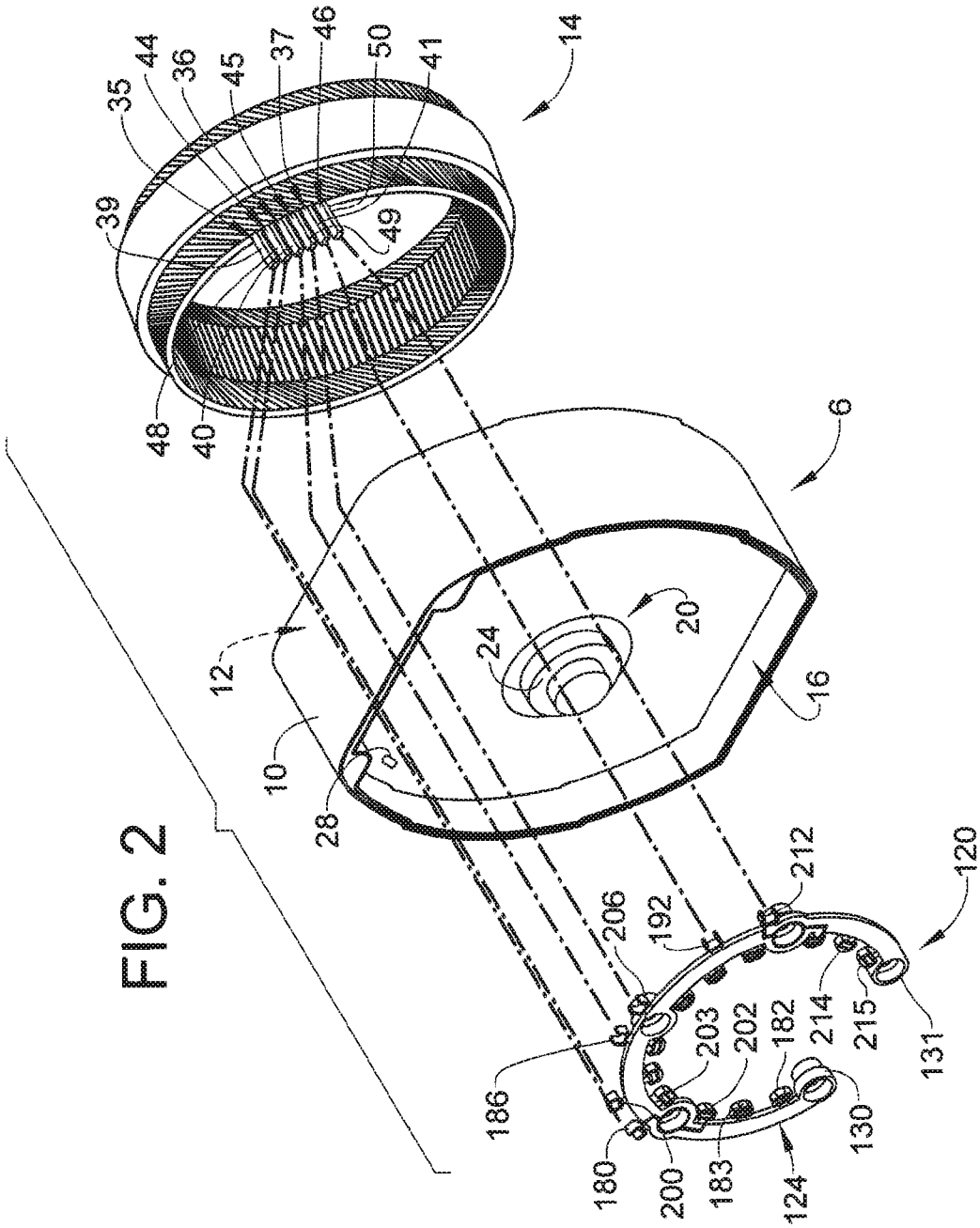
14
35
44
36
45
37
46
50
41
39
49
48
40
6
12
10
28
24
20
16
120
212
206
192
186
203
202
182
214
215
131
130
180
200
183
124

FIG. 2

FIG. 3

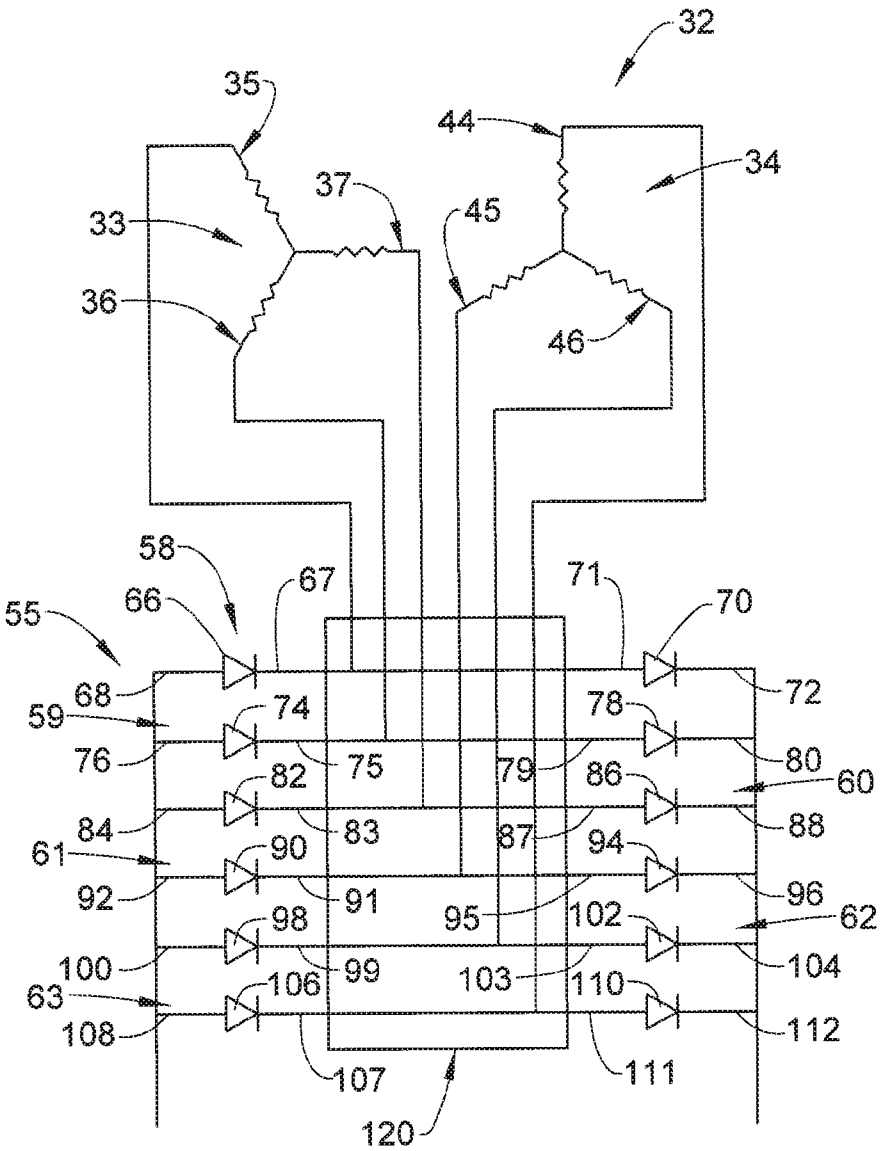
32
35
44
34
37
45
33
36
46
58
67
71
55
66
70
68
72
59
74
78
76
75
79
80
82
86
60
84
83
87
88
61
90
94
92
91
96
95
98
102
62
100
99
103
104
63
106
110
108
112
107
111
120

FIG. 4

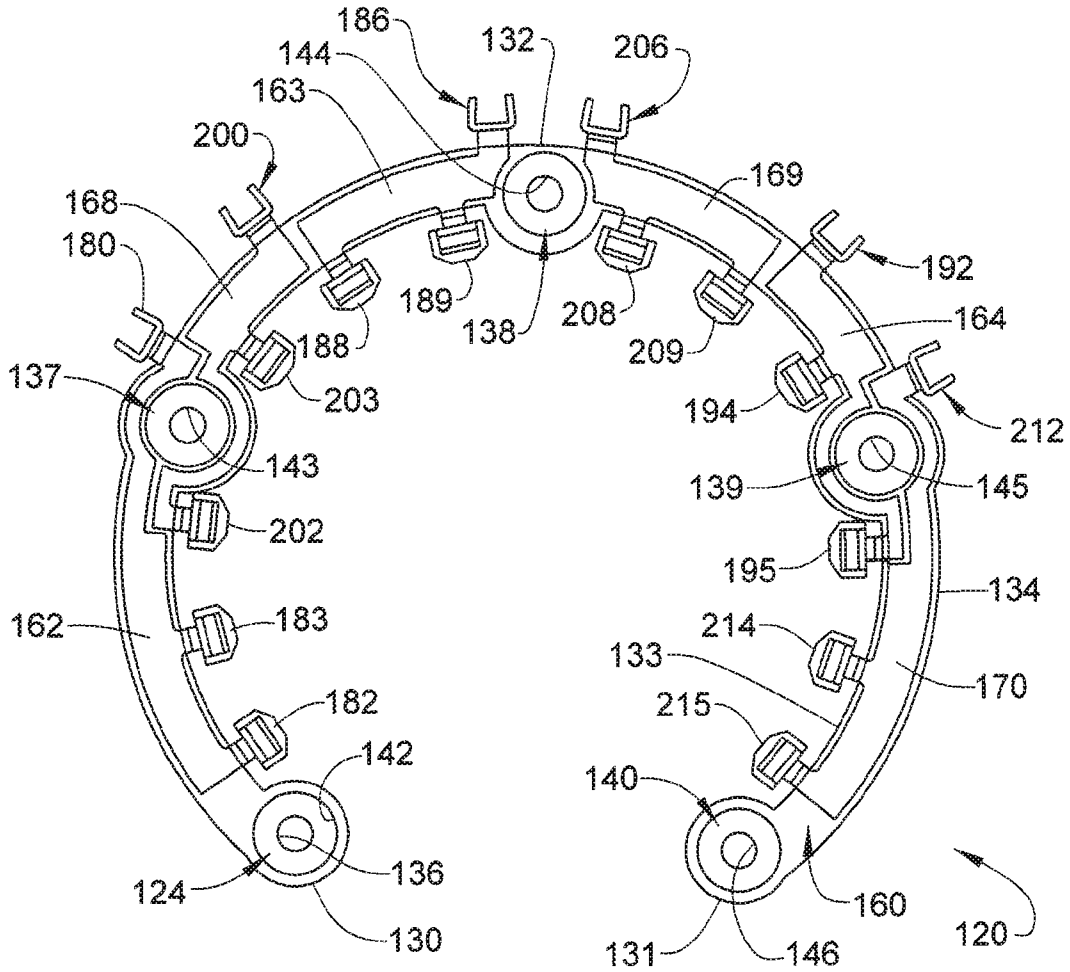
186
132
206
144
163
200
169
168
180
192
189
138
208
164
188
209
137
203
194
212
143
139
145
202
195
134
162
183
214
133
170
182
215
142
140
136
124
160
130
131
146
120

INTERNATIONAL SEARCH REPORT

International application No.
PCT/US2016/036442

A. CLASSIFICATION OF SUBJECT MATTER

H02K 5/22(2006.01)I, H02K 3/28(2006.01)I

According to International Patent Classification (IPC) or to both national classification and IPC

B. FIELDS SEARCHED

Minimum documentation searched (classification system followed by classification symbols)
H02K 5/22; H02K 3/46; H02K 15/02; H02K 9/02; H02K 5/00; H02K 5/18; H02K 9/00; H02K 29/08; H02K 1/04; H02K 3/50; H02K 3/28

Documentation searched other than minimum documentation to the extent that such documents are included in the fields searched
Korean utility models and applications for utility models
Japanese utility models and applications for utility models

Electronic data base consulted during the international search (name of data base and, where practicable, search terms used)
eKOMPASS(KIPO internal) & Keywords: alternator, terminal, assembly, conductor, stator, rotor, plate, diode, rectifier, generator, wire, winding

C. DOCUMENTS CONSIDERED TO BE RELEVANT

Category*	Citation of document, with indication, where appropriate, of the relevant passages	Relevant to claim No.
Y	US 5682070 A (KATSUMI ADACHI et al.) 28 October 1997 See column 8, line 47-column 16, line 27 and figures 1-15.	1-20
Y	US 2012-0126638 A1 (KAZUNORI TANAKA) 24 May 2012 See abstract, paragraphs 33-66 and figures 1-13.	1-20
A	US 2008-0073986 A1 (SEON JOONG LEE) 27 March 2008 See abstract, claims 1-5 and figures 3-7.	1-20
A	JP 2006-094573 A (NIPPON DENSAN CORP.) 06 April 2006 See abstract, claims 1-4 and figures 1-6.	1-20
A	KR 10-2011-0135221 A (DOOWON TECHNICAL COLLEGE et al.) 16 December 2011 See claims 1-6 and figures 1-4.	1-20

☐ Further documents are listed in the continuation of Box C.

☒ See patent family annex.

* Special categories of cited documents:
"A" document defining the general state of the art which is not considered to be of particular relevance
"E" earlier application or patent but published on or after the international filing date
"L" document which may throw doubts on priority claim(s) or which is cited to establish the publication date of another citation or other special reason (as specified)
"O" document referring to an oral disclosure, use, exhibition or other means
"P" document published prior to the international filing date but later than the priority date claimed
"T" later document published after the international filing date or priority date and not in conflict with the application but cited to understand the principle or theory underlying the invention
"X" document of particular relevance; the claimed invention cannot be considered novel or cannot be considered to involve an inventive step when the document is taken alone
"Y" document of particular relevance; the claimed invention cannot be considered to involve an inventive step when the document is combined with one or more other such documents,such combination being obvious to a person skilled in the art
"&" document member of the same patent family

Date of the actual completion of the international search	Date of mailing of the international search report
12 September 2016 (12.09.2016)	**12 September 2016 (12.09.2016)**

Name and mailing address of the ISA/KR	Authorized officer
International Application Division Korean Intellectual Property Office 189 Cheongsa-ro, Seo-gu, Daejeon, 35208, Republic of Korea	CHO, KI YUN
Facsimile No. +82-42-481-8578	Telephone No. +82-42-481-5655

INTERNATIONAL SEARCH REPORT

Information on patent family members

International application No.

PCT/US2016/036442

Patent document cited in search report	Publication date	Patent family member(s)	Publication date
US 5682070 A	28/10/1997	CN 1084947 C	15/05/2002
		CN 1139309 A	01/01/1997
		DE 69623398 T2	22/05/2003
		DE 69631704 T2	09/12/2004
		EP 0751609 A2	02/01/1997
		EP 0751609 A3	03/12/1997
		EP 0751609 B1	04/09/2002
		EP 1137156 A2	26/09/2001
		EP 1137156 A3	14/11/2001
		EP 1137156 B1	25/02/2004
		HK 1003311 A1	10/01/2003
		JP 09-019119 A	17/01/1997
		JP 3342987 B2	11/11/2002
		KR 10-0220311 B1	15/09/1999
		TW 277177 B	01/06/1996
US 2012-0126638 A1	24/05/2012	CN 102480192 A	30/05/2012
		CN 102480192 B	12/11/2014
		DE 102011086645 A1	24/05/2012
		FR 2967843 A1	25/05/2012
		JP 2012-110180 A	07/06/2012
		JP 5389771 B2	15/01/2014
		US 8692427 B2	08/04/2014
US 2008-0073986 A1	27/03/2008	KR 10-0830510 B1	21/05/2008
		KR 10-0830511 B1	21/05/2008
		KR 10-0869509 B1	19/11/2008
JP 2006-094573 A	06/04/2006	JP 2006-109666 A	20/04/2006
		JP 4617794 B2	26/01/2011
		JP 4702593 B2	15/06/2011
		US 2006-0063403 A1	23/03/2006
		US 7663274 B2	16/02/2010
KR 10-2011-0135221 A	16/12/2011	WO 2011-155710 A2	15/12/2011
		WO 2011-155710 A3	15/12/2011