D. STOUT.

HOUSE MOVING CARRIAGE.

APPLICATION FILED JULY 28, 1909.

955,223. Patented Apr. 19, 1910.

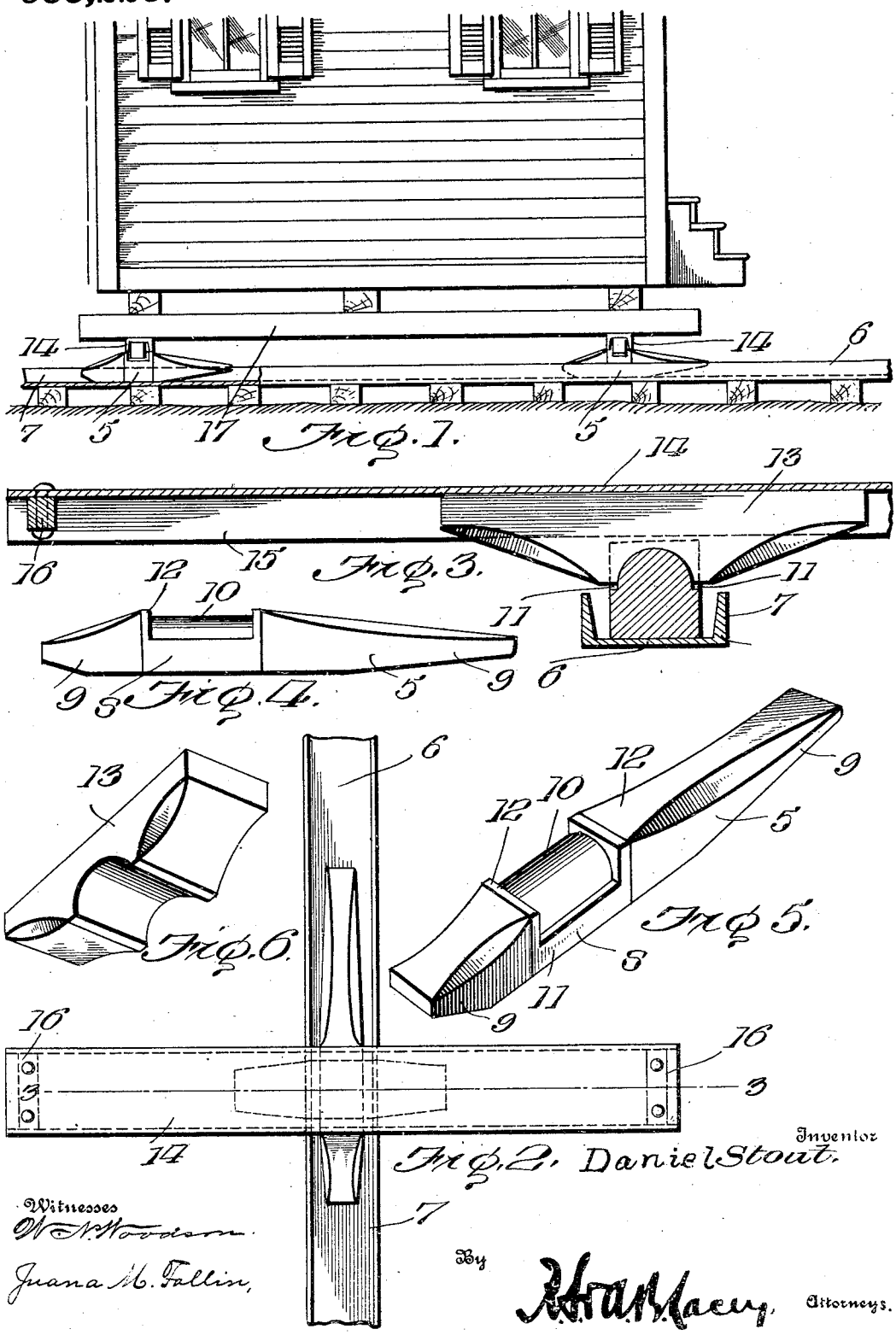

Inventor
Daniel Stout.

Witnesses
W. N. Woodson
Juana M. Fallin,

By
[illegible] Macey, Attorneys.

ANDREW B. GRAHAM CO., PHOTO-LITHOGRAPHERS, WASHINGTON, D. C.

UNITED STATES PATENT OFFICE.

DANIEL STOUT, OF WILMINGTON, OHIO.

HOUSE-MOVING CARRIAGE.

955,223. Specification of Letters Patent. Patented Apr. 19, 1910.

Application filed July 23, 1909. Serial No. 509,999.

To all whom it may concern:

Be it known that I, DANIEL STOUT, citizen of the United States, residing at Wilmington, in the county of Clinton and State of Ohio, have invented certain new and useful Improvements in House-Moving Carriages, of which the following is a specification.

This invention relates to a sliding carriage or truck for moving houses and other heavy structures and has for its object to provide a comparatively simple and thoroughly efficient device of this character especially designed to take the place of the usual rollers employed for this purpose.

A further object is to provide a carriage or truck having a shoe arranged to slide on a track and provided with a bolster having a longitudinally disposed beam resting thereon and disposed at substantially right angles to the longitudinal plane of the track, said beam serving to sustain the weight of the building or other structure being transported.

A further object is to provide a truck or carriage, the bolster of which is pivotally mounted on the sliding shoe and capable of being adjusted longitudinally of the supporting beam.

A still further object of the invention is generally to improve this class of devices so as to increase their utility, durability and efficiency.

Further objects and advantages will appear in the following description, it being understood that various changes in form, proportions and minor details of construction may be resorted to within the scope of the appended claims.

For a full understanding of the invention and the merits thereof and also to acquire a knowledge of the details of construction and the means for effecting the result, reference is to be had to the following description and accompanying drawings, in which:

Figure 1 is a side elevation partly in section of a sliding truck or carriage constructed in accordance with my invention showing the same positioned beneath a house; Fig. 2 is a top plan view of one of the sliding trucks or carriages; Fig. 3 is a transverse sectional view taken on the line 3—3 of Fig. 2; Fig. 4 is a side elevation of the sliding shoe detached; Fig. 5 is a perspective view of the shoe; Fig. 6 is a similar view of the bolster.

Corresponding and like parts are referred to in the following description and indicated in all the views of the drawings by the same reference characters.

The improved truck or carriage forming the subject matter of the present invention includes a shoe 5 mounted for sliding movement on a track 6, the latter being provided with oppositely disposed vertical guide flanges 7. The intermediate portion of the shoe 5 is substantially rectangular in cross section, as indicated at 8, while the opposite ends thereof are reduced and inclined or beveled on their lower longitudinal edges at 9. The upper surface of the rectangular portion 8 is provided with a curved face 10 defining oppositely disposed longitudinal stop shoulders 11 and spaced transverse stop shoulders 12.

Mounted for oscillation on the curved bearing surface 10 of the shoe, is a bolster 13 having its lower face provided with a socket curved to conform to the curved surface 10 and its upper surface flat and unobstructed for engagement with a transverse supporting beam 14. The beam 14 is preferably formed of channel iron and is provided with oppositely disposed depending guide flanges 15 connected at the opposite ends of the beam by transverse stop ribs or bars 16, the latter being riveted or otherwise rigidly secured to the beam 14, as shown.

It will here be noted that the longitudinal shoulders 11, by engagement with the base of the bolster 13, serve to limit the tilting movement of said bolster on the shoe 5, while the transverse stop shoulders 12, by engagement with the bolster, serve to center the latter on said shoe. It will also be noted that the bolster 13 may be adjusted longitudinally of the transverse supporting beam 14 according to the distance between the tracks 6, thus to permit the tracks to be spaced at any desired distance apart, the stops 16 serving to limit the longitudinal movement of the bolsters 13.

In using the truck, the building or other heavy structure to be moved is jacked up in the usual manner and one or more tracks 6 positioned beneath the same, after which the trucks or carriages are positioned on the tracks with the transverse beams 14 extending transversely across the building and at substantially right angles to the plane of the tracks, it being preferred to place one or more heavy timbers 17 on the beams 14 for the structure to rest upon. The tracks

6 having been thoroughly greased, the operator inserts the pointed end of a crow-bar or other suitable tool beneath either beveled end 9 of the shoe 5 and by working the lever back and forth in the usual manner causes the shoe 5 carrying the beams 14 to travel on the tracks 6, this operation being continued until the building has been moved to its final destination.

By having the bolsters 13 slidably mounted between the guide flanges 15 of the transverse beams 14, said bolsters may be adjusted longitudinally of said beams in either direction to accommodate the distance between the tracks 6, as before stated.

While it is preferred to have the lower face of the shoe provided with a flat bearing surface for contact with the greased surface of the track 6, it will of course be understood that said shoe may be provided with roller or ball bearings to reduce friction between the parts, and if desired, similar roller or ball bearings may be formed on the upper surface of the bolster 13 and on the socket in the lower face of said bolster without departing from the spirit of the invention.

Having thus described the invention, what is claimed as new is:

1. A device of the class described including a track, a shoe slidably mounted on the track, a bolster resting on the shoe, and a supporting beam carried by the bolster, said bolster being movable longitudinally with respect to the supporting beam.

2. A device of the class described including a track, a shoe slidably mounted on the track, a bolster mounted on the shoe, and a supporting beam carried by the shoe and disposed at substantially right angles to the longitudinal plane of the track, said bolster being movable longitudinally with respect to the supporting beam.

3. A device of the class described including a track, a shoe slidably mounted on the track, a bolster pivotally mounted on the shoe, and a transverse supporting beam carried by the bolster, said bolster being movable longitudinally with respect to the supporting beam.

4. A device of the class described including a track, a shoe slidably mounted on the track, a bolster pivotally mounted on the shoe, and a supporting beam resting on the bolster and provided with oppositely disposed stops for engagement with the adjacent ends of the bolster.

5. A device of the class described including a track having oppositely disposed guide flanges, a shoe slidably mounted on the track between said flanges and having its base inclined upwardly in opposite directions, a bolster pivotally mounted on the shoe, and a transverse supporting beam resting on the bolster and disposed at substantially right angles to the longitudinal plane of the track.

6. A device of the class described including a track, a shoe slidably mounted on the track and provided with a curved bearing surface, a bolster pivotally mounted on the shoe and having a curved socket for the reception of the bearing surface of the shoe, and a supporting beam resting on the upper surface of the bolster.

7. A device of the class described including a track, a shoe slidably mounted on the track and provided with a curved surface defining oppositely disposed longitudinal stop shoulders and spaced transverse stop shoulders, a bolster having a socket for the reception of the curved surface of the shoe and adapted to engage the longitudinal shoulders for limiting the tilting movement of the bolster, and a supporting beam resting on the upper surface of the bolster and provided with oppositely disposed stop ribs, said bolster being centered on the shoe by engagement with the transverse stop shoulders.

8. A device of the class described including a track, a shoe slidably mounted on the track and provided with a curved bearing surface, a bolster pivotally mounted for tilting movement on the shoe and having a socket for the reception of the curved bearing surface, a supporting beam resting on the bolster and having spaced depending flanges, and stop ribs connecting said flanges, said bolster being slidably mounted under the supporting beam and adapted to engage the stop ribs for limiting the longitudinal movement of the bolster.

In testimony whereof I affix my signature in presence of two witnesses.

DAN. STOUT. [L. S.]

Witnesses:

A. D. JENKS,

W. E. TURNER.