United States Patent

[11] 3,620,505

[72] Inventor **Robert H. Murdock**
Kensington, Calif.

[21] Appl. No **32,086**
[22] Filed **Apr. 27, 1970**
[45] Patented **Nov. 16, 1971**
[73] Assignee **Railtec Corporation**
Emeryville, Calif.

[54] **RAILING CONSTRUCTION**
10 Claims, 8 Drawing Figs.

[52] **U.S. Cl.** **256/70,** 256/59
[51] **Int. Cl.** **E04h 17/14**
[50] **Field of Search** 256/70, 65, 21, 22, 24; 287/203

[56] **References Cited**

UNITED STATES PATENTS

Re.6,685	10/1875	Wickersham	256/65 X
34,246	1/1862	Edwards et al.	256/65 X
210,826	12/1878	Van Dorn	256/70
2,078,824	4/1937	Wirth	287/20.3
2,338,790	1/1944	Wasiewicz et al.	287/20.3
2,560,525	7/1951	Nyl	287/20.3
2,954,638	10/1960	Motter	256/65 UX
3,498,589	3/1970	Murdock	256/70

Primary Examiner—Dennis L. Taylor
Attorney—Harris Zimmerman

ABSTRACT: A railing construction in which a continuous aluminum or other metal rail member is provided with a downwardly directed slot or opening extending along the length thereof. Rail supporting posts, balusters, wall brackets or the like are receivable in said slot at any desired longitudinal spacing. Each of such supporting elements are provided with opposed sidewalls disposed in spaced relation to the sidewalls of the slot when the element is inserted therein. Wedge members are then inserted in opposite longitudinal directions in such spaces to tightly lock the rail member to the supporting element.

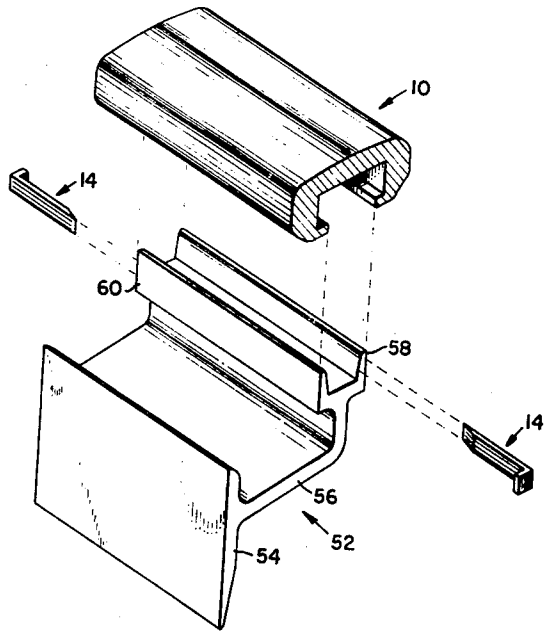

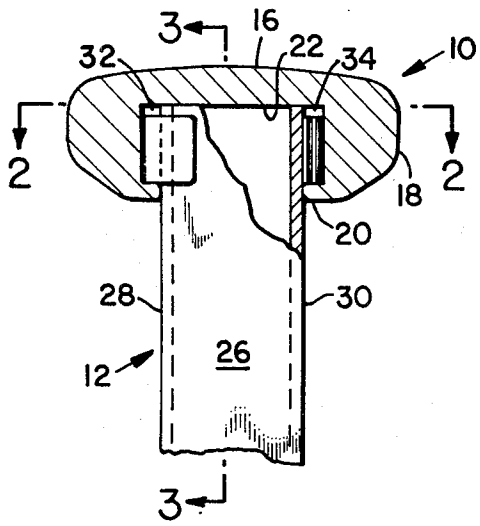

FIG_1

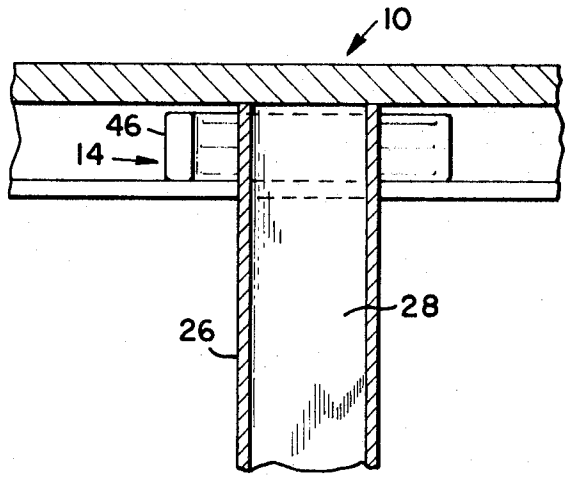

FIG_3

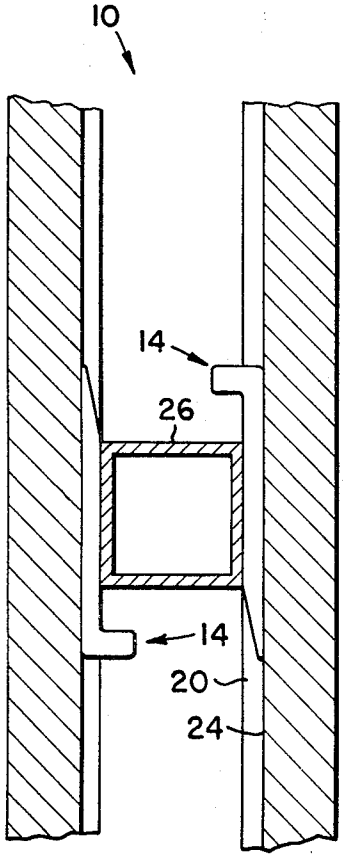

FIG_2

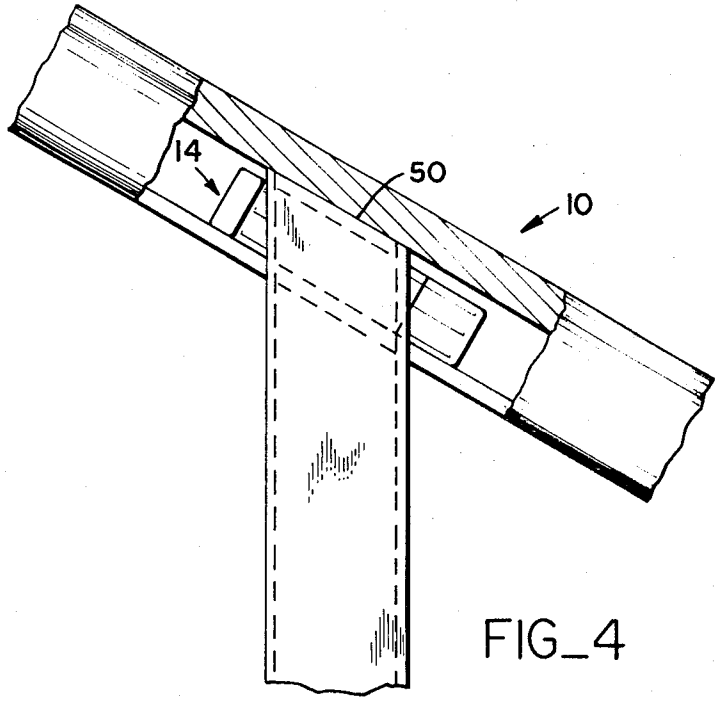

FIG_4

INVENTOR.
ROBERT H. MURDOCK
BY
Harris Zimmerman
ATTORNEY

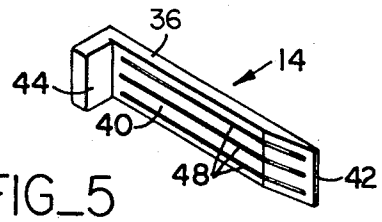

FIG_5

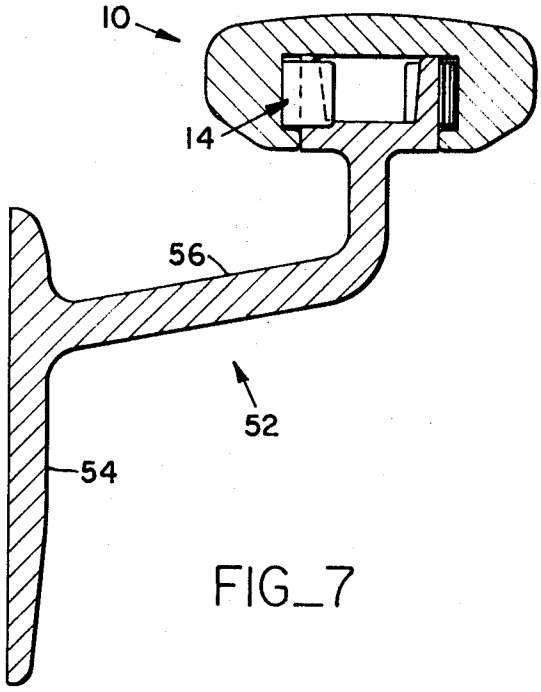

FIG_7

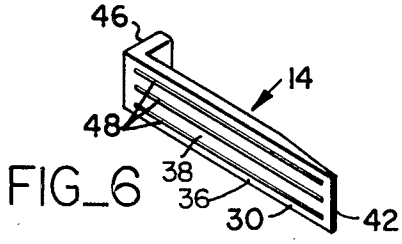

FIG_6

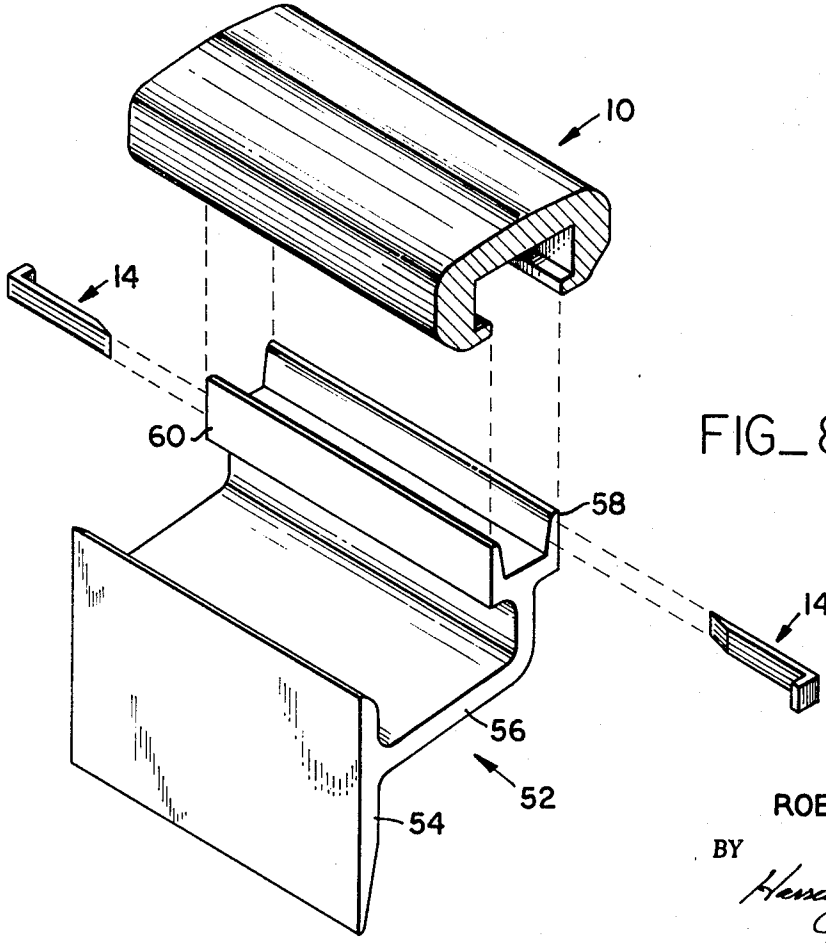

FIG_8

INVENTOR.
ROBERT H. MURDOCK
BY
Hessin Zimmerman
ATTORNEY

RAILING CONSTRUCTION

BACKGROUND OF THE INVENTION

In the fabrication and assembly of metal railing constructions, and more particularly in desirable aluminum railings, numerous problems exist when the railing is required to not only extend for a straight run, but must be adaptable to rattleproof ramps, corners, wall returns, and at the same time be subject to various slopes or rakes. Aside from the connection of the rail member per se to a supporting element, most railing installations require special fabrication to accommodate each job, or a substantial amount of time is spent on the job site to effect proper installation.

In accordance with the teachings of the present invention, an extremely simple, strong and durable railing construction is provided which is substantially universal in application, which may be rapidly installed without conventional fastening means, which is and rattleproof, which is most effective against normal vandalism.

THE DRAWING

FIG. 1 is an end elevational view of the railing construction of the present invention where a post or baluster is illustrated as the rail supporting element.

FIG. 2 is a cross-sectional plan view taken in the plane indicated by line 2—2 of FIG. 1.

FIG. 3 is a longitudinal cross-sectional view taken in the plane indicated by line 3—3 of FIG. 1.

FIG. 4 is a view similar to FIG. 3, but illustrating a construction where a slope or rake is present.

FIGS. 5 and 6 are front and rear perspective views of the wedge elements of the invention.

FIG. 7 is an end elevational view wherein a wall bracket is shown as the rail supporting element.

FIG. 8 is an exploded perspective view of the assembly shown in FIG. 7.

DESCRIPTION

In broad terms, the structure of the present invention includes a continuous top rail **10**, a rail supporting element **12**, and wedge elements **14** for securely locking the rail to the supporting elements. Preferably all of these components are formed of aluminum.

Referring first to FIGS. 1 to 3 of the drawing, it will be seen that top rail **10** consists of a longitudinally extending aluminum extrusion of a generally inverted U-shaped cross-sectional configuration. The rail includes a top wall **16**, depending sidewalls **18** and short opposed inturned flanges **20** at the lower ends of the sidewalls. Thus, the rail defines a continuous downwardly opening slot or opening extending for the length of the rail.

The inner surface **22** of the top wall and the opposed spaced inner surfaces **24** of the sidewalls are generally disposed at right angles to each other, while the outer surfaces of such walls are preferably curved and without any sharp edges to present a more pleasing aesthetic effect.

Rail **10** may be supported at spaced locations along its length by the elements **12**, which as shown in this embodiment of the invention comprise tubular posts **26** also formed of aluminum. The spacing between at least two opposed walls **28** and **30** of the post is such that the post may enter the restricted opening to the rail slot defined by the inner edges of the flanges **20**, but with a minimal clearance therebetween, which thereby centers the post relative to the rail sidewalls **20**. The top end of the post may thus engage surface **22** of the top wall at any longitudinal position along the rail. With the post so inserted, or in the usual situation with the rail placed over preinstalled posts, generally rectangular spaces **32** and **34** are provided between the post walls and the inner surfaces of the rail sidewalls.

To rigidly lock rail **10** to post **26**, the wedges **14** are inserted in the spaces **32** and **34**. The wedge **14**, best illustrated in FIGS. 5 and 6 of the drawing is preferably formed as an aluminum die casting and includes a body portion **36** having a flat bottom wall **38** and a top wall **40** which is longitudinally tapered towards one end of the body which terminates in a thin edge **42**. The width of the body is less than the spacing between the top of flanges **20** and top wall surface **22** thereby permitting ready insertion of the wedge with its bottom wall positioned against one of the inner sidewall surfaces **24**. The maximum thickness of the wedge body is greater than the inward projection of flange **20** so that with the post positioned in the rail slot, wedges **14** may be driven between post **28** **28** and **30** and their respective spaced surfaces **24** of the sidewalls. As illustrated, the wedges are driven from opposite longitudinal directions which results in an extremely tight and secure locking action between the rail and post. Preferably, the wedge is provided with a head portion **44**, extending normally from bottom wall **38** for the width of the body and terminating beyond the top wall **40**. This head provides easier handling and insertion of the wedge and also defines a relatively large end surface **46** which permits the use of a tool to forcibly drive the wedge into the aforesaid locking relationship. When so locked, the hidden nature of the wedges as well as its tight fit will effectively resist normal vandalism.

To further insure the locking action, the top and bottom walls of the wedge are provided with longitudinally extending ridges or ribs **48** which project outwardly for a distance of about 0.015 inch. It would be possible, but not too practical, to provide such ridges on the post or rail surfaces engaged by the wedge.

Referring to FIG. 4 of the drawing, it will be seen that the identical constructional features are present where the rail **10** is at other than 90° with the post axis. The sole distinction is that the upper end **50** of post **26** is cut off at the appropriate rake or slope angle. It might be pointed out, however, that if the angle was slight, a transversely cut end could still be used, and the rail locked to the post, with all but one edge of the top of the post at an angle to rail surface **22**. While this is not normally recommended, it is convenient where some slight misalignment may occur between the rail and post.

In FIGS. 7 and 8, in place of the posts **26**, the supporting elements comprise wall mounted brackets **52**. Such brackets include a wall mounting plate **54** and an outwardly extending arm **56** carrying a pair of parallel walls **58**, **60**. Such walls are spaced and correspond to the post walls **28**, **30** and are intended to enter between the rail flanges **20**. After the walls are so inserted, the wedges **14** are driven home in the manner previously described.

I claim:

1. A railing construction including an elongated rail having a top wall and spaced apart depending sidewalls defining a slot extending longitudinally of said rail, a supporting element for said rail having an end portion receivable within said slot with at least one of a pair of opposed plane sidewalls of said end portion facing the inner surface of one of the respective side walls of said rail to provide a space between said side surface and said sidewall, and a wedge forced in said space to frictionally lock said rail to said supporting element.

2. A construction as set forth in claim 1 in which a space is provided between both of the plane side surfaces of said element end portion and their respectively adjacent rail sidewalls, and a wedge is forced in each of such spaces to frictionally lock said rail to said supporting element from both sides thereof,

3. A construction as set forth in claim 2 in which said wedges extend longitudinally on said rail and are directed opposite to one another on each side of said element walls.

4. A construction as set forth in claim 1 in which said wedge is provided with an enlarged head portion at one end thereof and a thin edge at the other end thereof.

5. A construction as set forth in claim 1 in which said rail sidewalls have inturned opposed flanges at the lower portions thereof to thereby center said supporting element side surfaces relative to said rail sidewalls, and a wedge is forced between each of said element sides and its adjacent sidewall.

6. A construction as set forth in claim 5 in which said supporting element comprises a generally rectangular tubular post.

7. A construction as set forth in claim 5 in which said supporting element comprises a wall-mounted bracket having said opposed plane side surfaces extending upwardly therefrom.

8. A construction as set forth in claim 1 in which said wedge is provided with a plurality of ridges extending longitudinally

thereof.

9. A construction as set forth in claim 5 in which said wedges have a minimum thickness less than the extent of said flanges from said rail sidewalls and a maximum thickness in excess of such extent.

10. A construction as set forth in claim 1 in which said wedge has a head portion exceeding the lateral width of said space.

* * * * *